D-30.10

SHEET 1 of 2

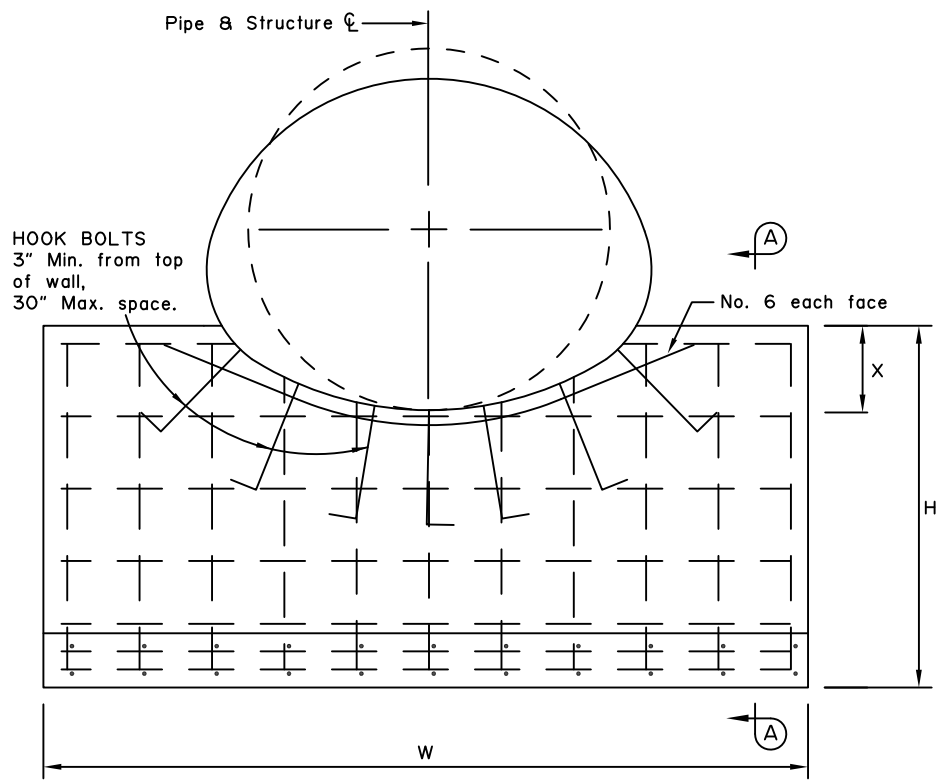

ELEVATION

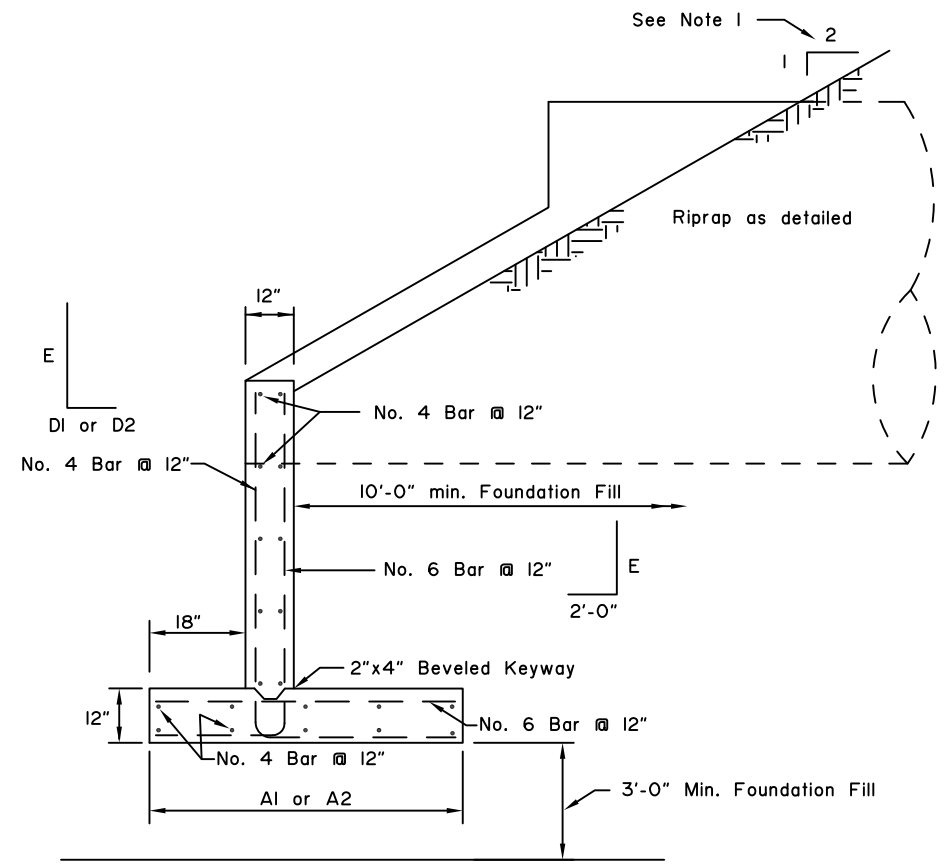

SECTION A-A

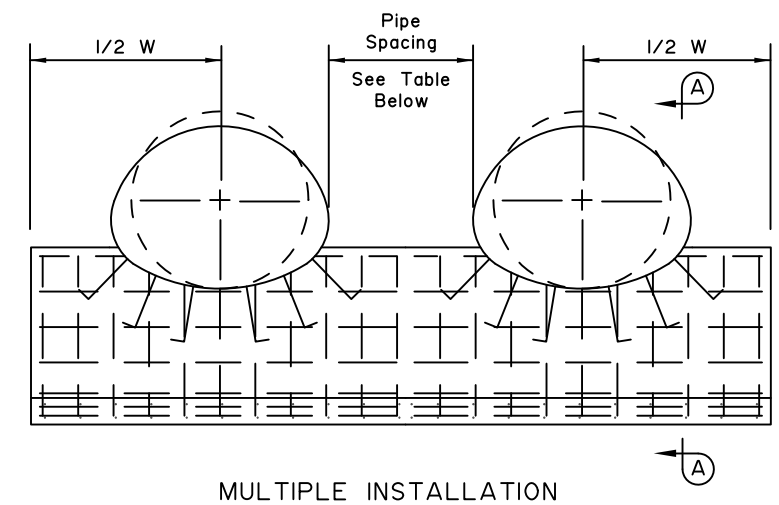

MULTIPLE INSTALLATION

Minimum Space Between Pipes
1/2 Dia. of Pipe or 1/2 Span of Pipe Arch, 24" Min.

CORRUGATED METAL PIPE ✱ SEE NOTE 11							
Dia.	W	H	A1✱	A2✱	D1✱	D2✱	E
5'-0"	9'-0"	4'-0"	4'-0"	4'-0"	2'-0"	2'-0"	3'-6"
5'-6"	10'-0"	4'-6"	4'-0"	4'-0"	2'-0"	2'-0"	4'-0"
6'-0"	11'-0"	4'-6"	4'-0"	4'-0"	2'-0"	2'-0"	4'-0"
6'-6"	12'-0"	4'-6"	4'-0"	4'-0"	2'-0"	2'-0"	4'-0"
7'-0"	12'-6"	4'-6"	4'-0"	4'-0"	2'-0"	2'-0"	4'-0"
7'-6"	13'-6"	5'-0"	4'-6"	4'-0"	2'-6"	2'-0"	4'-6"
8'-0"	14'-6"	5'-0"	4'-6"	4'-0"	2'-6"	2'-0"	4'-6"
8'-6"	15'-6"	5'-0"	4'-6"	4'-0"	2'-6"	2'-0"	4'-6"
9'-0"	16'-6"	5'-6"	5'-0"	4'-0"	3'-0"	2'-0"	5'-0"
9'-6"	17'-0"	5'-6"	5'-0"	4'-0"	3'-0"	2'-0"	5'-0"
10'-0"	18'-0"	5'-6"	5'-0"	4'-0"	3'-0"	2'-0"	5'-0"
10'-6"	19'-0"	5'-6"	5'-0"	4'-0"	3'-0"	2'-0"	5'-0"
11'-0"	20'-0"	5'-6"	5'-0"	4'-0"	3'-0"	2'-0"	5'-0"
11'-6"	21'-0"	5'-6"	5'-0"	4'-0"	3'-0"	2'-0"	5'-0"
12'-0"	21'-6"	5'-6"	5'-0"	4'-0"	3'-0"	2'-0"	5'-0"
12'-6"	22'-6"	5'-6"	5'-0"	4'-0"	3'-0"	2'-0"	5'-0"
13'-0"	23'-6"	5'-6"	5'-0"	4'-0"	3'-0"	2'-0"	5'-0"
13'-6"	24'-6"	6'-0"	5'-6"	4'-0"	3'-6"	2'-0"	5'-6"
14'-0"	25'-6"	6'-6"	6'-0"	4'-0"	4'-0"	2'-0"	6'-0"
14'-6"	26'-0"	6'-6"	6'-0"	4'-0"	4'-0"	2'-0"	6'-0"
15'-0"	27'-0"	6'-6"	6'-0"	4'-0"	4'-0"	2'-0"	6'-0"

CORRUGATED METAL PIPE ARCH ✱ SEE NOTE 11								
SPAN	RISE	W	H	A1✱	A2✱	D1✱	D2✱	E
6'-1"	4'-7"	14'-0"	5'-0"	4'-6"	4'-0"	2'-6"	2'-0"	4'-6"
6'-4"	4'-9"	14'-6"	5'-0"	4'-6"	4'-0"	2'-6"	2'-0"	4'-6"
6'-9"	4'-11"	15'-0"	5'-0"	4'-6"	4'-0"	2'-6"	2'-0"	4'-6"
7'-0"	5'-1"	15'-6"	5'-0"	4'-6"	4'-0"	2'-6"	2'-0"	4'-6"
7'-3"	5'-3"	16'-0"	5'-0"	4'-6"	4'-0"	2'-6"	2'-0"	4'-6"
7'-8"	5'-5"	16'-6"	5'-0"	4'-6"	4'-0"	2'-6"	2'-0"	4'-6"
7'-11"	5'-7"	17'-0"	5'-0"	4'-6"	4'-0"	2'-6"	2'-0"	4'-6"
8'-2"	5'-9"	17'-6"	5'-0"	4'-6"	4'-0"	2'-6"	2'-0"	4'-6"
8'-7"	5'-11"	18'-0"	5'-0"	4'-6"	4'-0"	2'-6"	2'-0"	4'-6"
8'-10"	6'-1"	18'-6"	5'-0"	4'-6"	4'-0"	2'-6"	2'-0"	4'-6"
9'-4"	6'-3"	19'-0"	5'-0"	4'-6"	4'-0"	2'-6"	2'-0"	4'-6"
9'-6"	6'-5"	19'-6"	5'-0"	4'-6"	4'-0"	2'-6"	2'-0"	4'-6"
9'-9"	6'-7"	20'-0"	5'-0"	4'-6"	4'-0"	2'-6"	2'-0"	4'-6"
10'-3"	6'-9"	20'-6"	5'-0"	4'-6"	4'-0"	2'-6"	2'-0"	4'-6"
10'-8"	6'-11"	21'-0"	5'-6"	5'-0"	4'-0"	3'-0"	2'-0"	5'-0"
10'-11"	7'-1"	21'-6"	5'-6"	5'-0"	4'-0"	3'-0"	2'-0"	5'-0"
11'-5"	7'-3"	22'-0"	5'-6"	5'-0"	4'-0"	3'-0"	2'-0"	5'-0"
11'-7"	7'-5"	22'-6"	5'-6"	5'-0"	4'-0"	3'-0"	2'-0"	5'-0"
11'-10"	7'-7"	23'-0"	5'-6"	5'-0"	4'-0"	3'-0"	2'-0"	5'-0"
12'-4"	7'-9"	23'-6"	5'-6"	5'-0"	4'-0"	3'-0"	2'-0"	5'-0"
12'-6"	7'-11"	24'-0"	5'-6"	5'-0"	4'-0"	3'-0"	2'-0"	5'-0"
12'-8"	8'-1"	24'-6"	5'-6"	5'-0"	4'-0"	3'-0"	2'-0"	5'-0"
12'-10"	8'-4"	25'-0"	5'-6"	5'-0"	4'-0"	3'-0"	2'-0"	5'-0"
13'-5"	8'-5"	25'-6"	5'-6"	5'-0"	4'-0"	3'-0"	2'-0"	5'-0"
13'-11"	8'-7"	26'-0"	5'-6"	5'-0"	4'-0"	3'-0"	2'-0"	5'-0"
14'-1"	8'-9"	26'-6"	5'-6"	5'-0"	4'-0"	3'-0"	2'-0"	5'-0"
14'-3"	8'-11"	27'-0"	5'-6"	5'-0"	4'-0"	3'-0"	2'-0"	5'-0"
14'-10"	9'-1"	27'-6"	5'-6"	5'-0"	4'-0"	3'-0"	2'-0"	5'-0"
15'-4"	9'-3"	28'-0"	5'-6"	5'-0"	4'-0"	3'-0"	2'-0"	5'-0"
15'-6"	9'-5"	28'-6"	5'-6"	5'-0"	4'-0"	3'-0"	2'-0"	5'-0"
15'-8"	9'-7"	29'-0"	5'-6"	5'-0"	4'-0"	3'-0"	2'-0"	5'-0"
15'-10"	9'-10"	29'-6"	5'-6"	5'-0"	4'-0"	3'-0"	2'-0"	5'-0"
16'-5"	9'-11"	30'-0"	5'-6"	5'-0"	4'-0"	3'-0"	2'-0"	5'-0"
16'-7"	10'-1"	30'-6"	5'-6"	5'-0"	4'-0"	3'-0"	2'-0"	5'-0"

GENERAL NOTES:

1. For use on 2:1 or flatter backfill slopes only.
2. For dimensions 'X' see Std. Dwg. D-07.
3. Use Class A concrete f'c = 4000 psi.
4. Use epoxy-coated ASTM A706, Grade 60 reinforcing steel fy=60,000 psi.
5. Place reinforcement 3" clear from surface of concrete unless otherwise noted.
6. Chamfer all exposed concrete corners 3/4".
7. If unsuitable foundation material is encountered, remove and backfill with Foundation Fill as directed by the Engineer.
8. Furnishing and installing hook bolts in place is incidental to Class A concrete.
9. Use galvanized ASTM A307 hook bolts and nuts. Torque culvert nuts to 140 ft/lbs.
10. Headwalls for skewed culverts to be parallel to road centerline. See plans for dimensions of openings in headwalls for skewed culverts.
11. For backfill soil with:
    ϕ=30°, γ=130 pcf
    Use A1 and D1
    ϕ=34°, γ=135 pcf
    Use A2 and D2

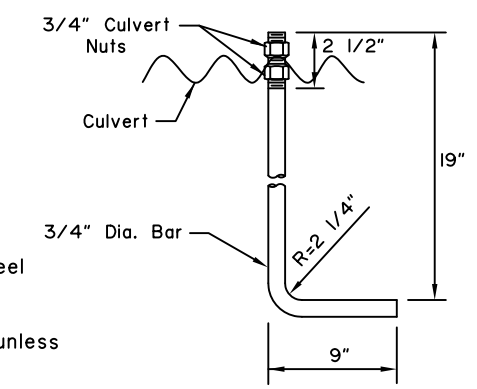

HOOK BOLT

REVISIONS		
Date	Description	By

State of Alaska
Department of Transportation
& Public Facilities

HEADWALLS CAST-IN-PLACE TYPE I

APPROVED

Travis W. Arndt
No. CE 10805
REGISTERED PROFESSIONAL ENGINEER
STATE OF ALASKA
49TH

Date 3/31/15

D-30.10

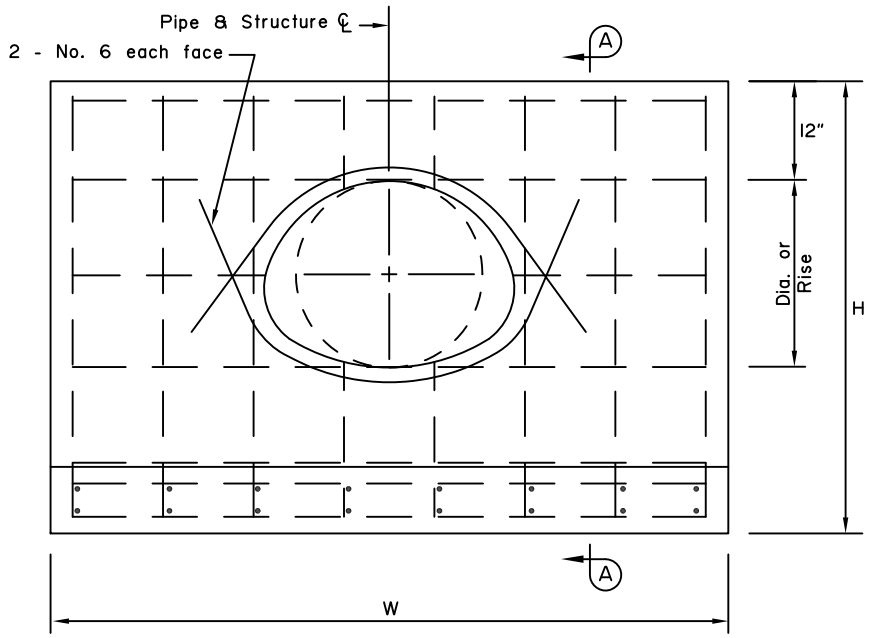

ELEVATION

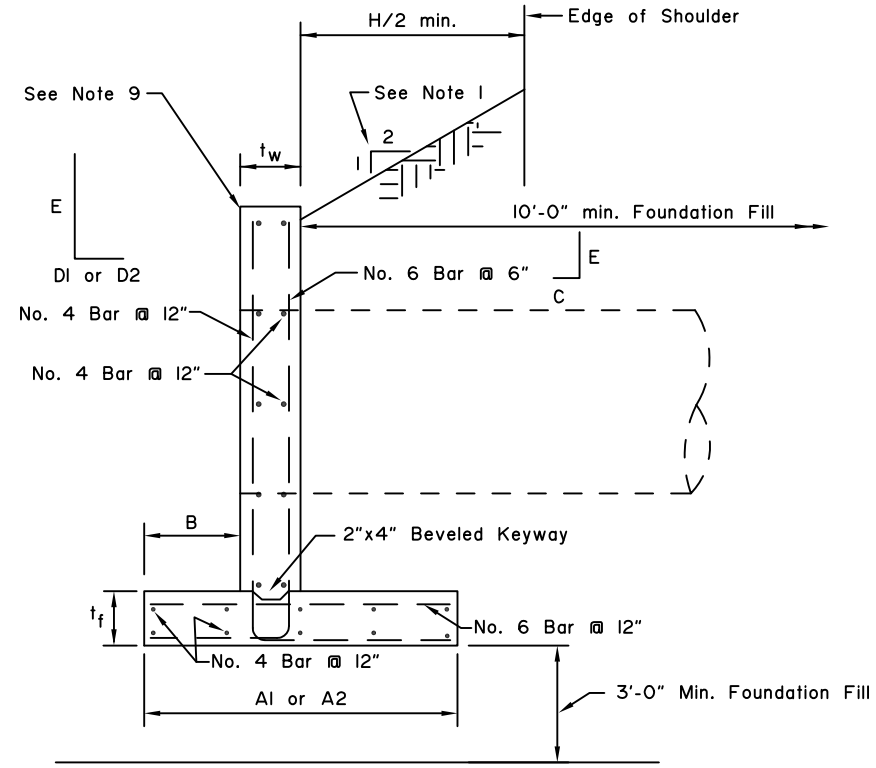

SECTION A-A

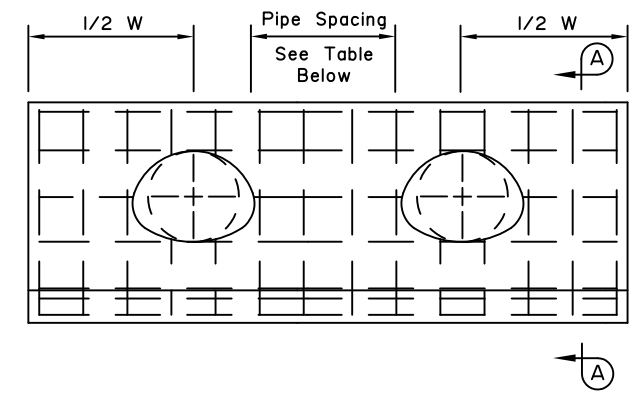

MULTIPLE INSTALLATION

Minimum Space Between Pipes
1/2 Dia. of Pipe or 1/2 Span of Pipe Arch, 24" Min.

CORRUGATED METAL PIPE											✱ SEE NOTE 8
Dia.	W	t_w	t_f	H	A1 ✱	A2 ✱	B	C	D1 ✱	D2 ✱	E
1'-6"	8'-0"	1'-0"	1'-0"	4'-6"	4'-0"	4'-0"	1'-6"	2'-0"	2'-0"	2'-0"	4'-0"
1'-9"	9'-0"	1'-0"	1'-0"	4'-9"	4'-6"	4'-0"	1'-6"	2'-0"	2'-6"	2'-0"	4'-3"
2'-0"	9'-6"	1'-0"	1'-0"	5'-0"	4'-6"	4'-0"	1'-6"	2'-0"	2'-6"	2'-0"	4'-6"
2'-6"	11'-6"	1'-0"	1'-0"	5'-6"	5'-0"	4'-0"	1'-6"	2'-0"	3'-0"	2'-0"	5'-0"
3'-0"	13'-0"	1'-0"	1'-0"	6'-0"	5'-6"	4'-0"	1'-6"	2'-0"	3'-6"	2'-0"	5'-6"
3'-6"	14'-6"	1'-0"	1'-0"	6'-6"	6'-0"	4'-0"	1'-6"	2'-0"	4'-0"	2'-0"	6'-0"
4'-0"	16'-0"	1'-0"	1'-0"	7'-0"	6'-6"	4'-6"	2'-0"	2'-6"	4'-0"	2'-0"	6'-6"
4'-6"	18'-0"	1'-0"	1'-0"	7'-6"	7'-0"	4'-6"	2'-0"	2'-6"	4'-6"	2'-0"	7'-0"
5'-0"	19'-6"	1'-0"	1'-0"	8'-0"	8'-0"	5'-0"	2'-6"	3'-0"	5'-0"	2'-0"	7'-6"
5'-6"	21'-0"	1'-0"	1'-0"	8'-6"	8'-6"	5'-6"	2'-6"	3'-0"	5'-6"	2'-6"	8'-0"
6'-0"	23'-0"	1'-0"	1'-0"	9'-0"	9'-6"	6'-0"	3'-0"	3'-6"	6'-0"	2'-6"	8'-6"
6'-6"	24'-6"	1'-3"	1'-3"	9'-9"	10'-0"	6'-0"	3'-0"	3'-9"	6'-6"	2'-6"	9'-3"
7'-0"	26'-0"	1'-3"	1'-3"	10'-3"	10'-0"	6'-6"	3'-0"	3'-9"	6'-6"	3'-0"	9'-9"
7'-6"	28'-0"	1'-6"	1'-6"	11'-0"	10'-6"	6'-6"	3'-0"	4'-0"	7'-0"	3'-0"	10'-6"
8'-0"	29'-6"	1'-6"	1'-6"	11'-6"	11'-0"	7'-0"	3'-0"	4'-0"	7'-6"	3'-6"	11'-0"
8'-6"	31'-0"	2'-0"	2'-0"	12'-6"	11'-6"	7'-0"	3'-0"	4'-6"	8'-0"	3'-6"	12'-0"
9'-0"	33'-0"	2'-0"	2'-0"	13'-0"	11'-6"	7'-6"	3'-0"	4'-6"	8'-0"	4'-0"	12'-6"

CORRUGATED METAL PIPE ARCH											✱ SEE NOTE 8
SPAN	RISE	W	tw	tf	H	A1 ✱	A2 ✱	B	C	D1 ✱	D2 ✱	E
1'-5"	1'-1"	6'-6"	1'-0"	1'-0"	4'-1"	4'-0"	4'-0"	1'-6"	2'-0"	2'-0"	2'-0"	3'-7"
1'-9"	1'-3"	7'-0"	1'-0"	1'-0"	4'-3"	4'-0"	4'-0"	1'-6"	2'-0"	2'-0"	2'-0"	3'-9"
2'-0"	1'-6"	8'-0"	1'-0"	1'-0"	4'-6"	4'-0"	4'-0"	1'-6"	2'-0"	2'-0"	2'-0"	4'-0"
2'-4"	1'-8"	8'-6"	1'-0"	1'-0"	4'-8"	4'-0"	4'-0"	1'-6"	2'-0"	2'-0"	2'-0"	4'-2"
2'-11"	2'-0"	9'-6"	1'-0"	1'-0"	5'-0"	4'-6"	4'-0"	1'-6"	2'-0"	2'-6"	2'-0"	4'-6"
3'-6"	2'-5"	11'-0"	1'-0"	1'-0"	5'-5"	5'-0"	4'-0"	1'-6"	2'-0"	3'-0"	2'-0"	4'-11"
4'-1"	2'-9"	12'-0"	1'-0"	1'-0"	5'-9"	5'-6"	4'-0"	1'-6"	2'-0"	3'-6"	2'-0"	5'-3"
4'-9"	3'-2"	13'-6"	1'-0"	1'-0"	6'-2"	5'-6"	4'-0"	1'-6"	2'-0"	3'-6"	2'-0"	5'-8"
5'-4"	3'-7"	15'-0"	1'-0"	1'-0"	6'-7"	6'-0"	4'-0"	1'-6"	2'-0"	4'-0"	2'-0"	6'-1"
5'-11"	3'-11"	16'-0"	1'-0"	1'-0"	6'-11"	6'-6"	4'-6"	2'-0"	2'-6"	4'-0"	2'-0"	6'-5"
6'-5"	4'-4"	17'-0"	1'-0"	1'-0"	7'-4"	7'-0"	4'-6"	2'-0"	2'-6"	4'-6"	2'-0"	6'-10"
7'-1"	4'-9"	19'-0"	1'-0"	1'-0"	7'-9"	8'-0"	4'-6"	2'-0"	2'-6"	5'-6"	2'-0"	7'-3"

GENERAL NOTES:

1. For use on 2:1 or flatter backfill slopes only.
2. Use Class A concrete f'c = 4000 psi.
3. Use epoxy-coated ASTM A706, Grade 60 reinforcing steel fy=60,000 psi.
4. Place reinforcement 3" clear from surface of concrete unless otherwise noted.
5. Chamfer all exposed concrete corners 3/4".
6. If unsuitable foundation material is encountered, remove and backfill with Foundation Fill as directed by the Engineer.
7. Headwalls for skewed culverts to be parallel to road centerline. See plans for dimensions of openings in headwalls for skewed culverts.
8. For backfill soil with:
   ϕ=30°, γ=130 pcf
   Use A1 and D1
   ϕ=34°, γ=135 pcf
   Use A2 and D2
9. Install pedestrian rail if near pedestrian facilities, otherwise install cable safety rail M-24 on all other headwalls.

REVISIONS		
Date	Description	By

State of Alaska
Department of Transportation
& Public Facilities

HEADWALLS CAST-IN-PLACE TYPE II

APPROVED

STATE OF ALASKA
49TH
Travis W. Arndt
No. CE 10805
REGISTERED PROFESSIONAL ENGINEER

Date 3/31/15

D-30.10

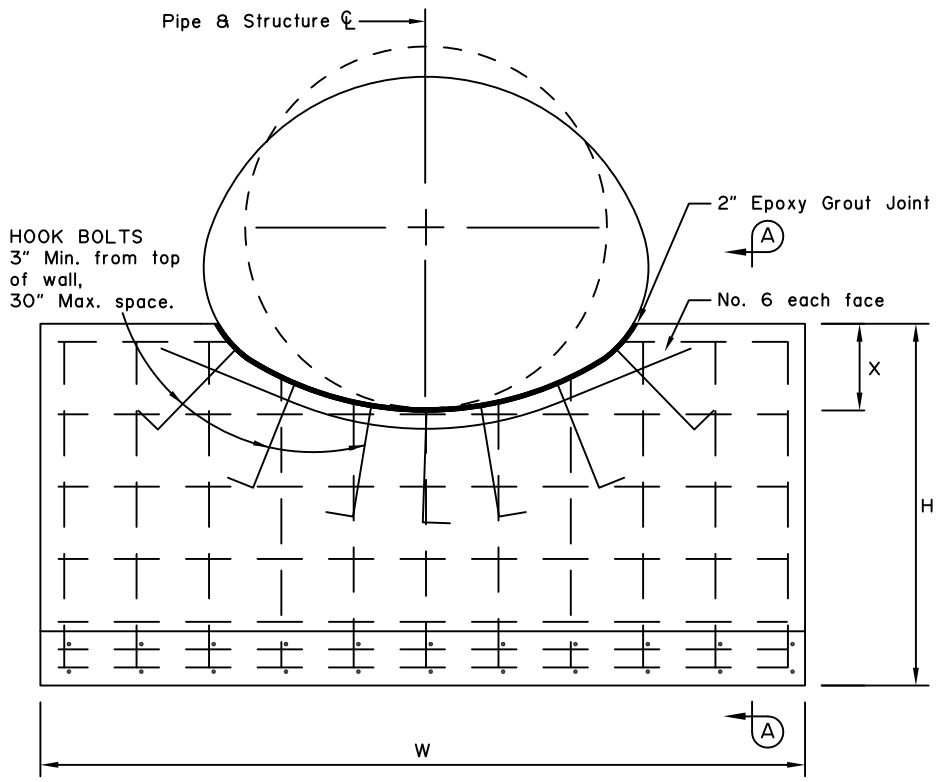

ELEVATION

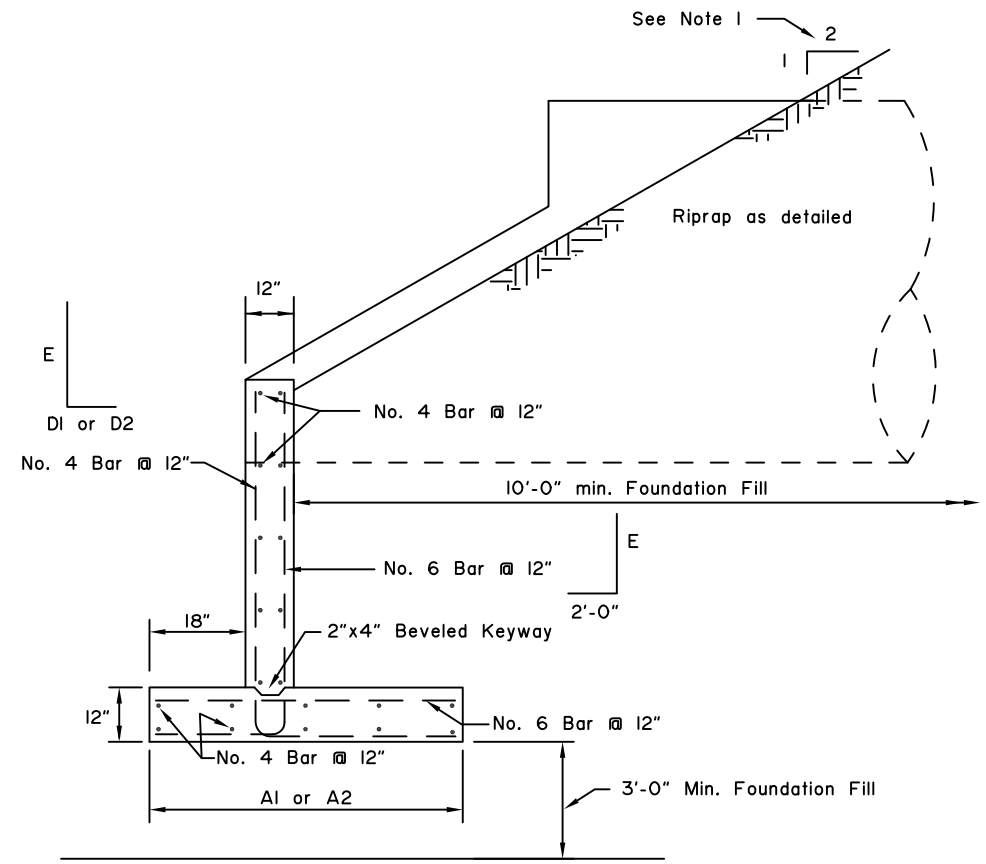

SECTION A-A

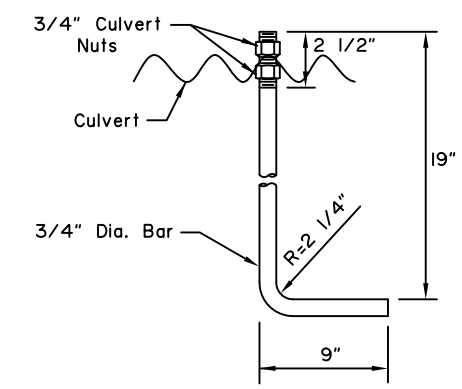

HOOK BOLT

CORRUGATED METAL PIPE ✱ SEE NOTE 11							
Dia.	W	H	A1 ✱	A2 ✱	D1 ✱	D2 ✱	E
5'-0"	9'-0"	4'-0"	4'-0"	4'-0"	2'-0"	2'-0"	3'-6"
5'-6"	10'-0"	4'-6"	4'-0"	4'-0"	2'-0"	2'-0"	4'-0"
6'-0"	11'-0"	4'-6"	4'-0"	4'-0"	2'-0"	2'-0"	4'-0"
6'-6"	12'-0"	4'-6"	4'-0"	4'-0"	2'-0"	2'-0"	4'-0"
7'-0"	12'-6"	4'-6"	4'-0"	4'-0"	2'-0"	2'-0"	4'-0"
7'-6"	13'-6"	5'-0"	4'-6"	4'-0"	2'-6"	2'-0"	4'-6"
8'-0"	14'-6"	5'-0"	4'-6"	4'-0"	2'-6"	2'-0"	4'-6"
8'-6"	15'-6"	5'-0"	4'-6"	4'-0"	2'-6"	2'-0"	4'-6"
9'-0"	16'-6"	5'-6"	5'-0"	4'-0"	3'-0"	2'-0"	5'-0"
9'-6"	17'-0"	5'-6"	5'-0"	4'-0"	3'-0"	2'-0"	5'-0"
10'-0"	18'-0"	5'-6"	5'-0"	4'-0"	3'-0"	2'-0"	5'-0"
10'-6"	19'-0"	5'-6"	5'-0"	4'-0"	3'-0"	2'-0"	5'-0"
11'-0"	20'-0"	5'-6"	5'-0"	4'-0"	3'-0"	2'-0"	5'-0"

CORRUGATED METAL PIPE ARCH ✱ SEE NOTE 11								
SPAN	RISE	W	H	A1 ✱	A2 ✱	D1 ✱	D2 ✱	E
6'-1"	4'-7"	14'-0"	5'-0"	4'-6"	4'-0"	2'-6"	2'-0"	4'-6"
6'-4"	4'-9"	14'-6"	5'-0"	4'-6"	4'-0"	2'-6"	2'-0"	4'-6"
6'-9"	4'-11"	15'-0"	5'-0"	4'-6"	4'-0"	2'-6"	2'-0"	4'-6"
7'-0"	5'-1"	15'-6"	5'-0"	4'-6"	4'-0"	2'-6"	2'-0"	4'-6"
7'-3"	5'-3"	16'-0"	5'-0"	4'-6"	4'-0"	2'-6"	2'-0"	4'-6"
7'-8"	5'-5"	16'-6"	5'-0"	4'-6"	4'-0"	2'-6"	2'-0"	4'-6"
7'-11"	5'-7"	17'-0"	5'-0"	4'-6"	4'-0"	2'-6"	2'-0"	4'-6"
8'-2"	5'-9"	17'-6"	5'-0"	4'-6"	4'-0"	2'-6"	2'-0"	4'-6"
8'-7"	5'-11"	18'-0"	5'-0"	4'-6"	4'-0"	2'-6"	2'-0"	4'-6"
8'-10"	6'-1"	18'-6"	5'-0"	4'-6"	4'-0"	2'-6"	2'-0"	4'-6"
9'-4"	6'-3"	19'-0"	5'-0"	4'-6"	4'-0"	2'-6"	2'-0"	4'-6"
9'-6"	6'-5"	19'-6"	5'-0"	4'-6"	4'-0"	2'-6"	2'-0"	4'-6"
9'-9"	6'-7"	20'-0"	5'-0"	4'-6"	4'-0"	2'-6"	2'-0"	4'-6"
10'-3"	6'-9"	20'-6"	5'-0"	4'-6"	4'-0"	2'-6"	2'-0"	4'-6"
10'-8"	6'-11"	21'-0"	5'-6"	5'-0"	4'-0"	3'-0"	2'-0"	5'-0"
10'-11"	7'-1"	21'-6"	5'-6"	5'-0"	4'-0"	3'-0"	2'-0"	5'-0"

GENERAL NOTES:

1. For use on 2:1 or flatter backfill slopes only.
2. For dimensions 'X' see Std. Dwg. D-07.
3. Use Class A concrete f'c = 4000 psi.
4. Use epoxy-coated ASTM A706, Grade 60 reinforcing steel fy=60,000 psi.
5. Place reinforcement 3" clear from surface of concrete unless otherwise noted.
6. Chamfer all exposed concrete corners 3/4".
7. If unsuitable foundation material is encountered, remove and backfill with Foundation Fill as directed by the Engineer.
8. Furnishing and installing hook bolts in place is incidental to Class A concrete.
9. Use galvanized ASTM A307 hook bolts and nuts. Torque culvert nuts to 140 ft/lbs.
10. Headwalls for skewed culverts to be parallel to road centerline. See plans for dimensions of openings in headwalls for skewed culverts.
11. For backfill soil with:
    ϕ=30°, γ=130 pcf
    Use A1 and D1
    ϕ=34°, γ=135 pcf
    Use A2 and D2

REVISIONS		
Date	Description	By

State of Alaska
Department of Transportation
& Public Facilities

HEADWALLS PRECAST TYPE I

APPROVED

STATE OF ALASKA 49TH
Travis W. Arndt
No. CE 10805
REGISTERED PROFESSIONAL ENGINEER

Date 3/31/15

D-31.00

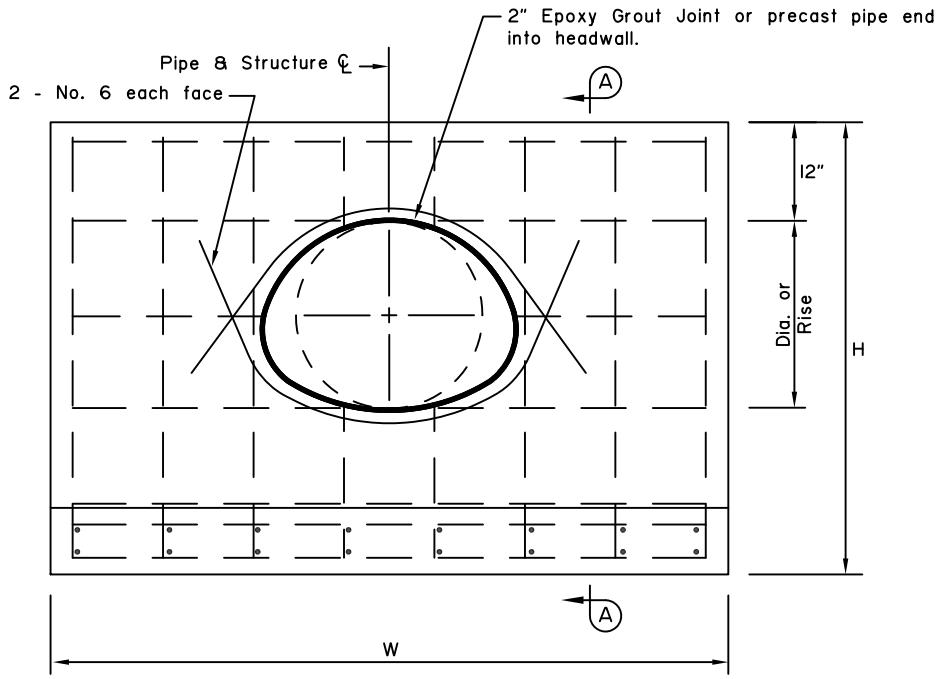

ELEVATION

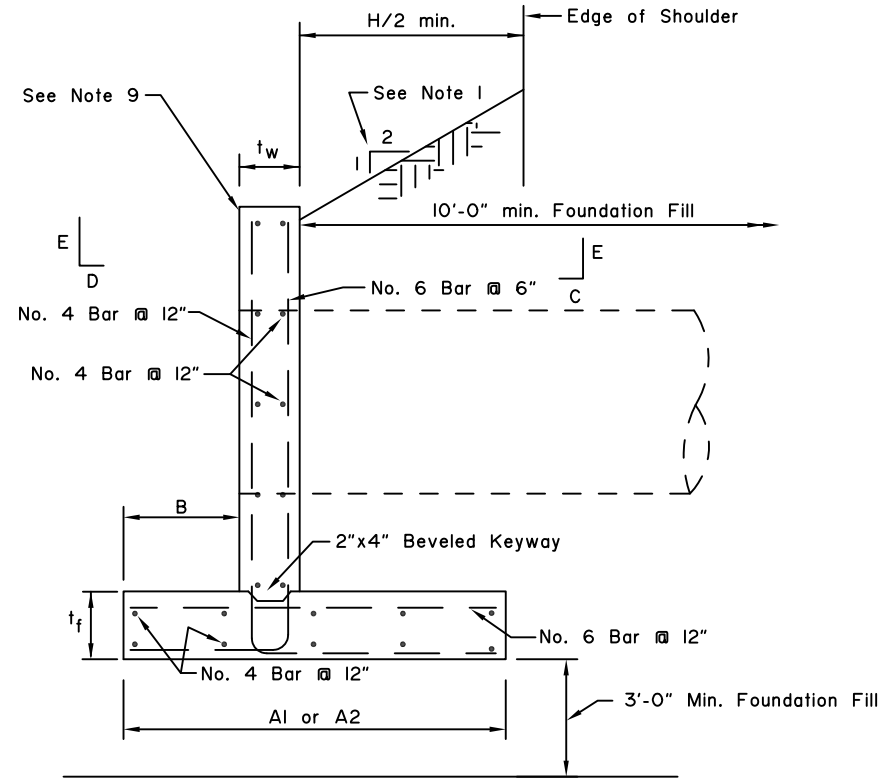

SECTION A-A

CORRUGATED METAL PIPE											✱ SEE NOTE 8
Dia.	W	t_w	t_f	H	A1✱	A2✱	B	C	D1✱	D2✱	E
1'-6"	8'-0"	1'-0"	1'-0"	4'-6"	6'-0"	4'-0"	1'-6"	2'-0"	4'-0"	2'-0"	4'-0"
1'-9"	9'-0"	1'-0"	1'-0"	4'-9"	6'-6"	4'-0"	1'-6"	2'-0"	4'-6"	2'-0"	4'-3"
2'-0"	9'-6"	1'-0"	1'-0"	5'-0"	7'-0"	4'-0"	1'-6"	2'-0"	5'-0"	2'-0"	4'-6"
2'-6"	11'-6"	1'-0"	1'-0"	5'-6"	7'-6"	4'-0"	1'-6"	2'-0"	5'-6"	2'-0"	5'-0"
3'-0"	13'-0"	1'-0"	1'-0"	6'-0"	8'-6"	4'-6"	1'-6"	2'-0"	6'-6"	2'-6"	5'-6"
3'-6"	14'-6"	1'-0"	1'-0"	6'-6"	9'-0"	5'-0"	1'-6"	2'-0"	7'-0"	3'-0"	6'-0"
4'-0"	16'-0"	1'-0"	1'-0"	7'-0"	10'-0"	5'-6"	2'-0"	2'-6"	7'-6"	3'-0"	6'-6"
4'-6"	18'-0"	1'-3"	1'-3"	7'-9"	11'-0"	6'-0"	2'-0"	2'-9"	8'-6"	3'-6"	7'-3"
5'-0"	19'-6"	1'-6"	1'-6"	8'-6"	12'-0"	6'-6"	2'-6"	3'-6"	9'-0"	3'-6"	8'-0"

CORRUGATED METAL PIPE ARCH											✱ SEE NOTE 8	
SPAN	RISE	W	t_w	t_f	H	A1✱	A2✱	B	C	D1✱	D2✱	E
1'-5"	1'-1"	6'-6"	1'-0"	1'-0"	4'-1"	5'-6"	4'-0"	1'-6"	2'-0"	3'-6"	2'-0"	3'-7"
1'-9"	1'-3"	7'-0"	1'-0"	1'-0"	4'-3"	5'-6"	4'-0"	1'-6"	2'-0"	3'-6"	2'-0"	3'-9"
2'-0"	1'-6"	8'-0"	1'-0"	1'-0"	4'-6"	6'-0"	4'-0"	1'-6"	2'-0"	4'-0"	2'-0"	4'-0"
2'-4"	1'-8"	8'-6"	1'-0"	1'-0"	4'-8"	6'-0"	4'-0"	1'-6"	2'-0"	4'-0"	2'-0"	4'-2"
2'-11"	2'-0"	9'-6"	1'-0"	1'-0"	5'-0"	7'-0"	4'-0"	1'-6"	2'-0"	5'-0"	2'-0"	4'-6"
3'-6"	2'-5"	11'-0"	1'-0"	1'-0"	5'-5"	7'-6"	4'-0"	1'-6"	2'-0"	5'-6"	2'-0"	4'-11"
4'-1"	2'-9"	12'-0"	1'-0"	1'-0"	5'-9"	8'-0"	4'-0"	1'-6"	2'-0"	6'-0"	2'-6"	5'-3"
4'-9"	3'-2"	13'-6"	1'-0"	1'-0"	6'-2"	8'-6"	4'-0"	1'-6"	2'-0"	6'-6"	2'-6"	5'-8"
5'-4"	3'-7"	15'-0"	1'-0"	1'-0"	6'-7"	9'-0"	5'-0"	1'-6"	2'-0"	7'-0"	3'-0"	6'-1"
5'-11"	3'-11"	16'-0"	1'-0"	1'-0"	6'-11"	10'-0"	5'-6"	2'-0"	2'-6"	7'-6"	3'-0"	6'-5"
6'-5"	4'-4"	17'-0"	1'-3"	1'-3"	7'-7"	10'-6"	5'-6"	2'-0"	2'-9"	8'-0"	3'-0"	7'-1"
7'-1"	4'-9"	19'-0"	1'-6"	1'-6"	8'-3"	11'-6"	6'-6"	2'-6"	3'-6"	8'-6"	3'-6"	7'-9"

GENERAL NOTES:

1. For use on 2:1 or flatter backfill slopes only.
2. Use Class A concrete f'c = 4000 psi.
3. Use epoxy-coated ASTM A706, Grade 60 reinforcing steel fy=60,000 psi.
4. Place reinforcement 3" clear from surface of concrete unless otherwise noted.
5. Chamfer all exposed concrete corners 3/4".
6. If unsuitable foundation material is encountered, remove and backfill with Foundation Fill as directed by the Engineer.
7. Headwalls for skewed culverts to be parallel to road centerline. See plans for dimensions of openings in headwalls for skewed culverts.
8. For backfill soil with:
   ϕ=30°, γ=130 pcf
   Use A1 and D1
   ϕ=34°, γ=135 pcf
   Use A2 and D2
9. Install pedestrian rail if near pedestrian facilities, otherwise install cable safety rail M-24 on all other headwalls.

REVISIONS		
Date	Description	By

State of Alaska
Department of Transportation
& Public Facilities

HEADWALLS PRECAST TYPE II

APPROVED

STATE OF ALASKA
49TH
Travis W. Arndt
No. CE 10805
REGISTERED PROFESSIONAL ENGINEER

Date 3/31/15

D-31.00

F-01.02

SHEET | of |

NOTE: Pull post shall be spaced at 250' intervals.

Fabric shall be placed on highway side of post.

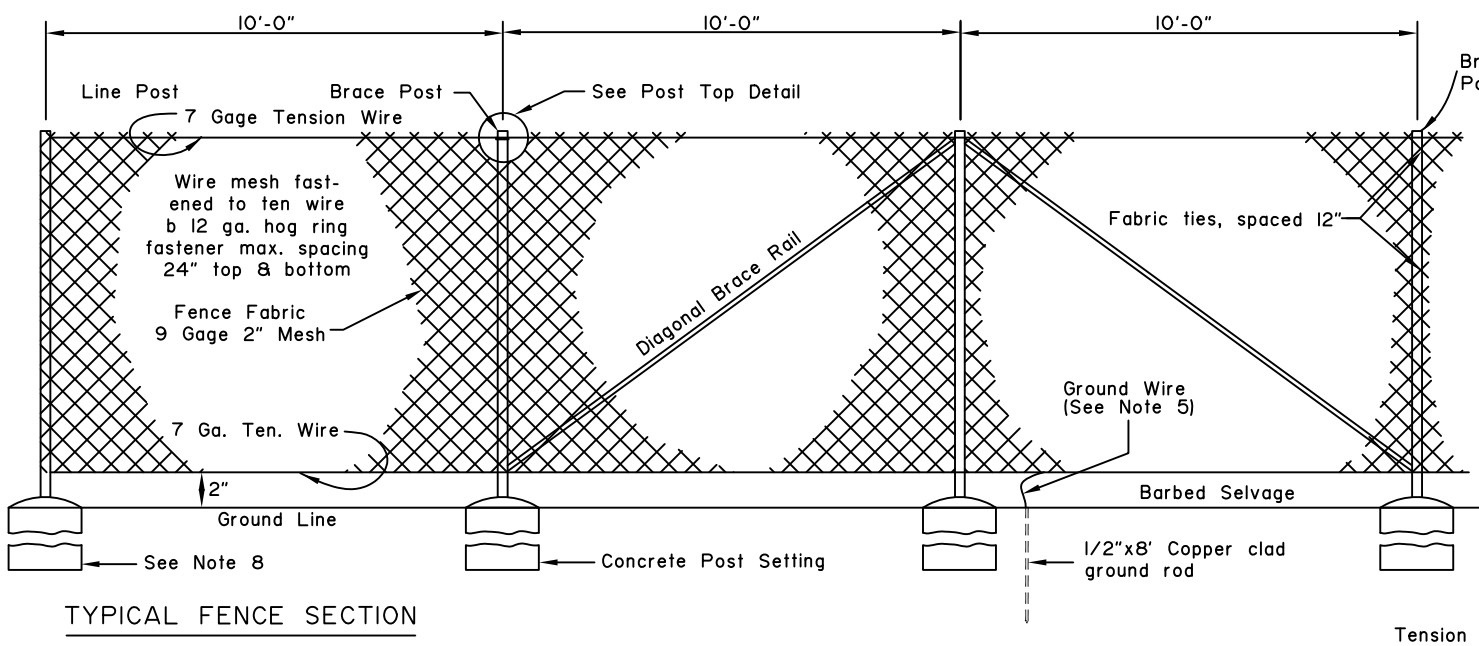

TYPICAL FENCE SECTION

TYPICAL PULL POST

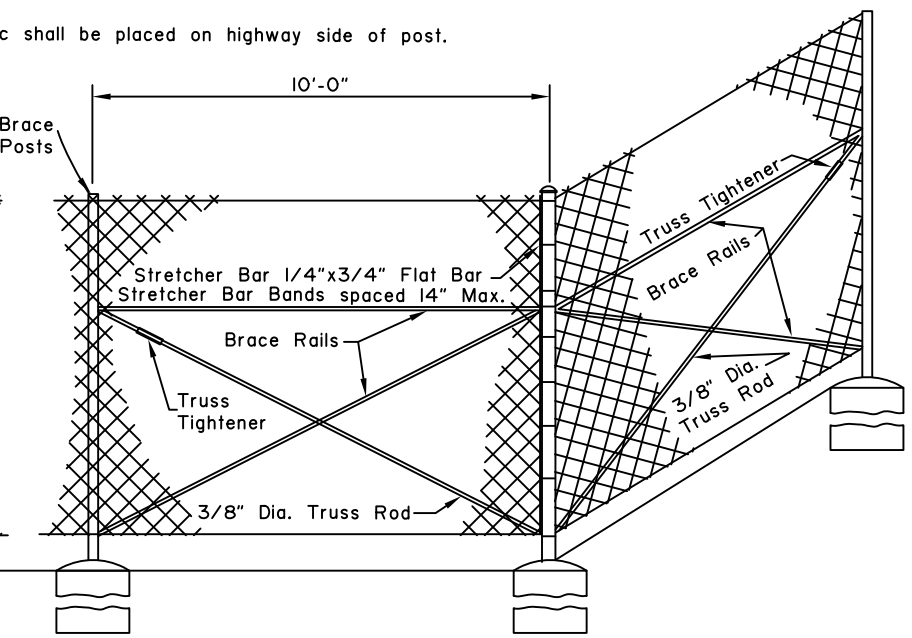

TYPICAL CORNER OR TERMINAL POST

GENERAL NOTES:

1. Space poles an equal distance apart. Maximum spacing is 10 feet unless directed otherwise by the Engineer.
2. Securely fasten post tops to post.
3. Securely fasten brace rails and truss rods to post with brace bands.
4. Provide truss rods with a tensioning adjusting mechanism.
5. Attach ground wire to fence fabric with a split bolt.
6. Stretch fabric to a smooth uniform appearance.
7. Details shown indicate general design and dimensions may vary among manufacturers.
8. Set line, pull, corner, and terminal posts in concrete footings unless in muskeg or shown otherwise in the plans.

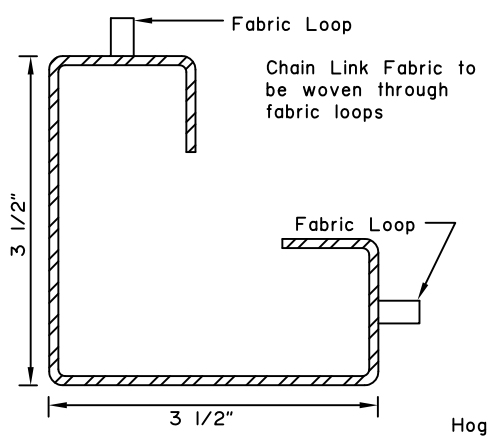

ROLL FORMED POST

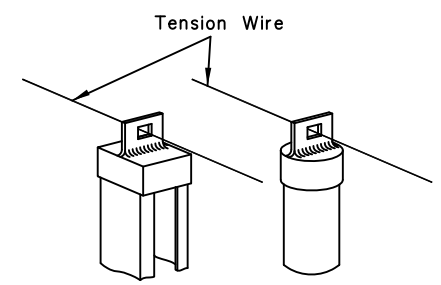

LINE POST TOPS

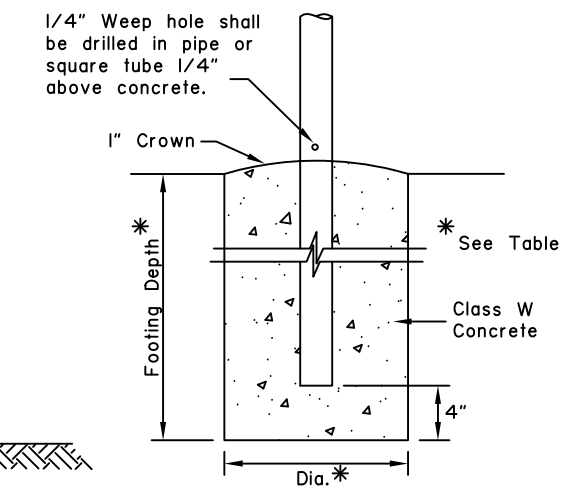

CONCRETE POST SETTING

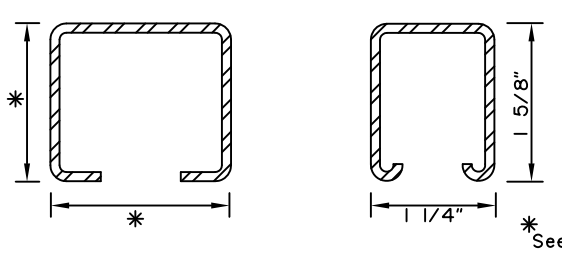

C POST

ROLL FORMED BRACE

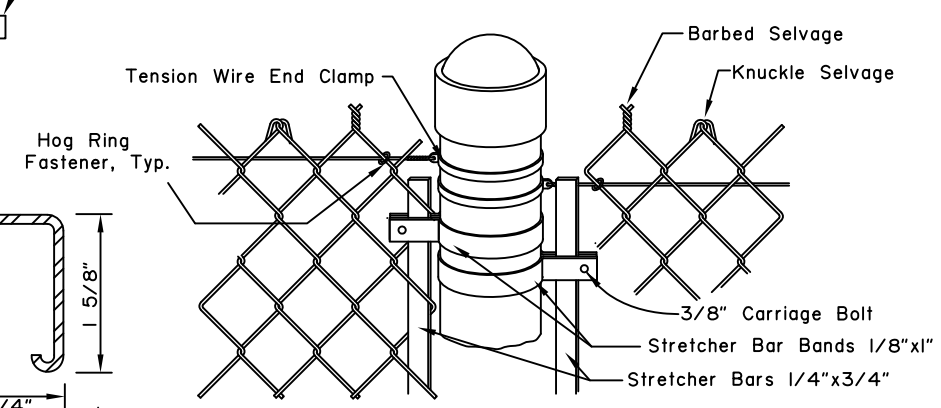

PIPE STYLE POST TOP

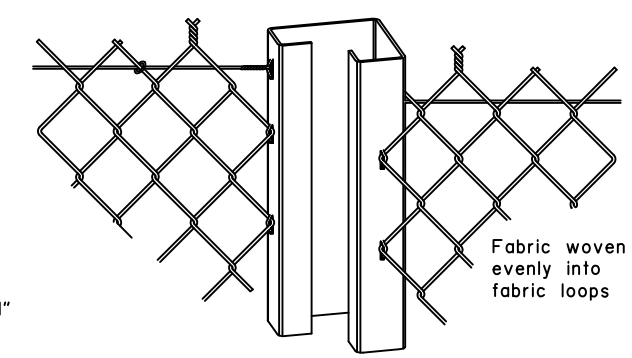

ROLL FORMED POST TOP

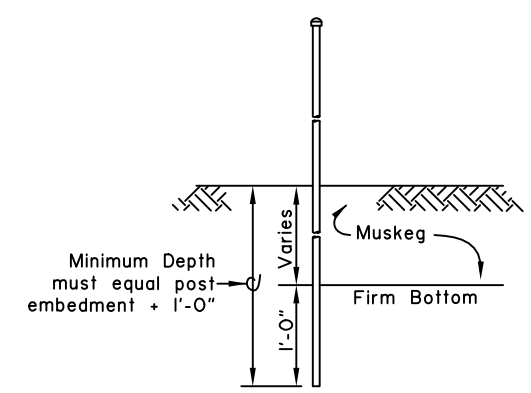

POST SETTING IN MUSKEG AREAS

FABRIC HEIGHT	POST														TOP OR BRACE RAIL						ALTERNATE POST	
	END-CORNER-PULL								LINE-BRACE												LINE-BRACE	
	PIPE		SQUARE TUBE		ROLL FORMED		FOOTING		PIPE		C POST		FOOTING		PIPE		ROLL FORMED		H POST		H POST	
	SIZE	WT/FT.	SIZE	WT/FT.	SIZE	WT/FT.	DEPTH	DIA.	SIZE	WT/FT.	SIZE	WT/FT.	DEPTH	DIA	SIZE	WT/FT.	SIZE	WT/FT.	SIZE	WT/FT.	SIZE	WT/FT.
3'	2"	3.65#	2" x 2"	4.31 #	3 1/2"x3 1/2"	4.84#	40"	10"	1 1/2"	2.72 #	1 7/8"x1 5/8"	2.28 #	28"	10"	1 1/4"	2.27#	1 5/8"	1.35#	1 1/2"x 1 5/16"	2.27 #	1 7/8"x1 5/8"	2.72#
4'	"	"	"	"	"	"	"	"	"	"	"	"	"	"	"	"	"	"	"	"	"	"
5'	2"	3.65#	2" x 2"	4.31 #	3 1/2"x3 1/2"	4.84#	40"	10"	1 1/2"	2.72 #	1 7/8"x1 5/8"	2.28 #	28"	10"	"	"	"	"	"	"	1 7/8"x1 5/8"	2.72#
6'	2 1/2"	5.79#	2 1/2"x2 1/2"	5.59#	3 1/2"x3 1/2"	4.84#	48"	15"	2"	3.65 #	2 1/4"x1 45/64"	2.64 #	40"	12"	"	"	"	"	"	"	2 1/4"x2"	4.1#
7'	"	"	"	"	"	"	"	"	"	"	"	"	"	"	"	"	"	"	"	"	"	"
8'	2 1/2"	5.79#	2 1/2"x2 1/2"	5.59#	3 1/2"x3 1/2"	4.84#	48"	15"	2"	3.65 #	2 1/4"x1 45/64"	2.64 #	40"	12"	"	"	"	"	"	"	2 1/4"x2"	4.1#

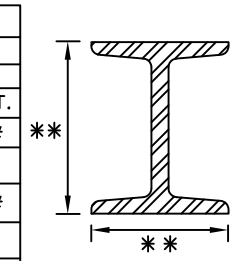

H POST

REVISIONS		
Date	Description	By
3/1/83	Revised Gen. Notes	WJF/HK
2/01/15	8 Foot Ground Rod Fix	LRG

State of Alaska
Department of Transportation
& Public Facilities

CHAIN LINK FENCE

APPROVED
Lars R. Gregovich
CE-8065
3/31/2015

Date

F-01.02

G-30.01

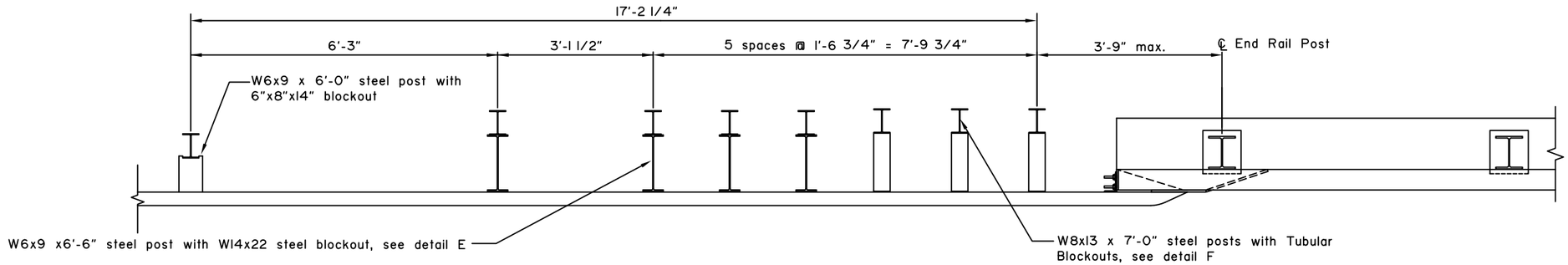

PLAN

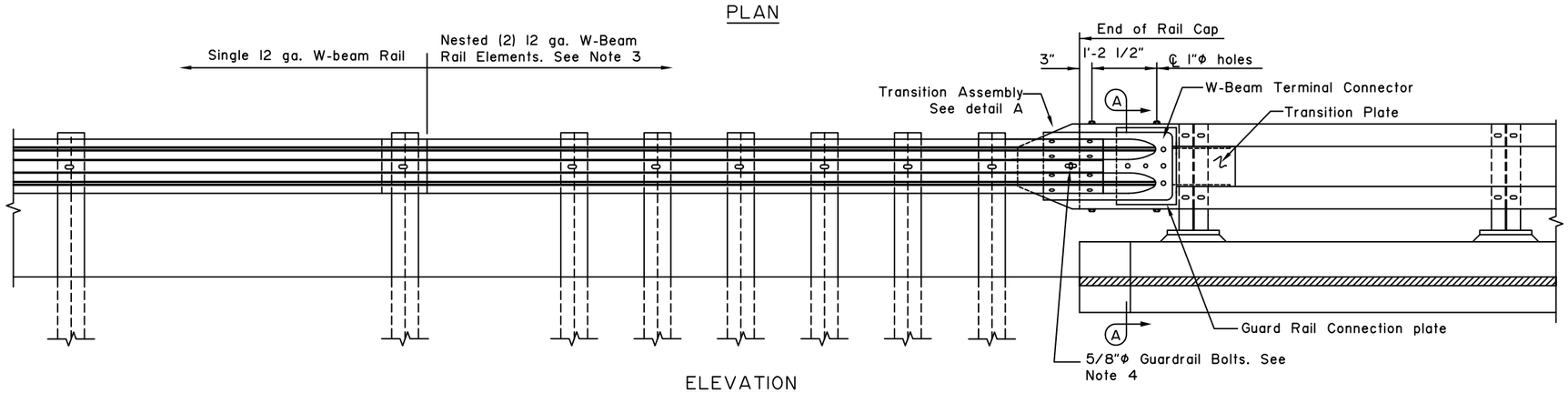

ELEVATION

GENERAL NOTES

1. All guardrail and guardrail connection hardware to conform to AASHTO M-180. All High Stregth Bolts conform to ASTM A325. All other steel to conform to ASTM A709 Grade 36.
2. Conform to G-00 and G-04S for all guardrail details not shown. No Back-up Plates required.
3. Lap approach guardrail to prevent snags from oncoming traffic.
4. Provide 4 1/2" horizontal slot in approach guardrail. Adjust guardrail bolts for sliding fit.
5. This design is approved for NCHRP 350, TL 3.

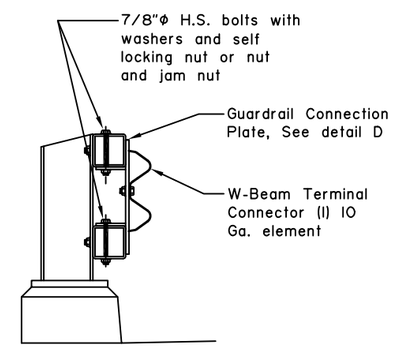

SECTION A-A

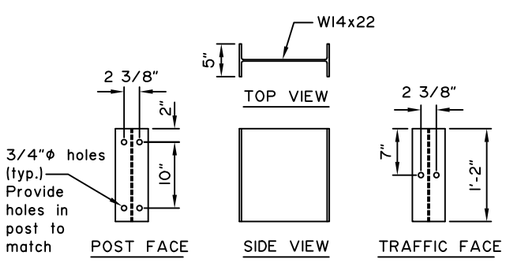

DETAIL E - STEEL BLOCK OUT

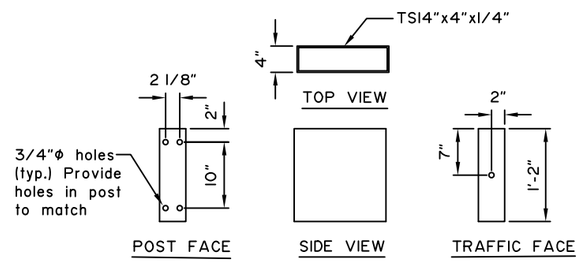

DETAIL F - TUBULAR BLOCKOUTS

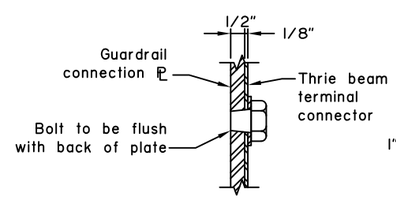

DETAIL G

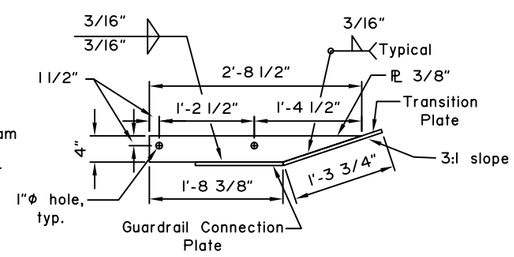

VIEW H-H

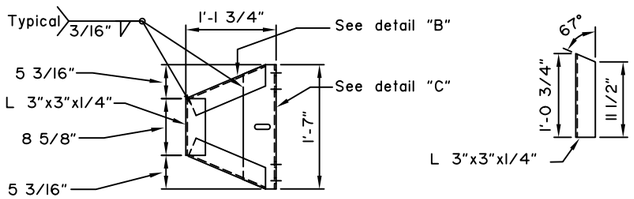

DETAIL A - TRANSITION ASSEMBLY

DETAIL B

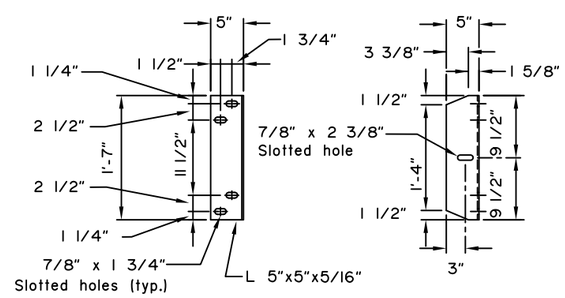

DETAIL C

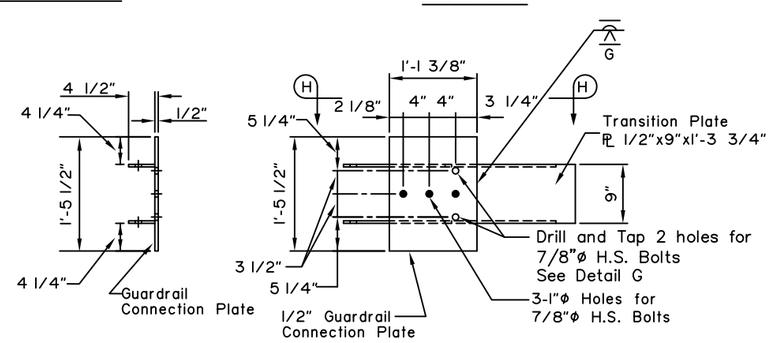

DETAIL D - GUARDRAIL CONNECTION PLATE

No Scale

REVISIONS		
Date	Description	By
8/10/11	Misc. Corrections	EEM

Sheet 1 of 1

State of Alaska
Department of Transportation
& Public Facilities

BRIDGE RAIL W-BEAM TRANSITION

APPROVED

Date 3/31/15

G-30.01

G-31.01

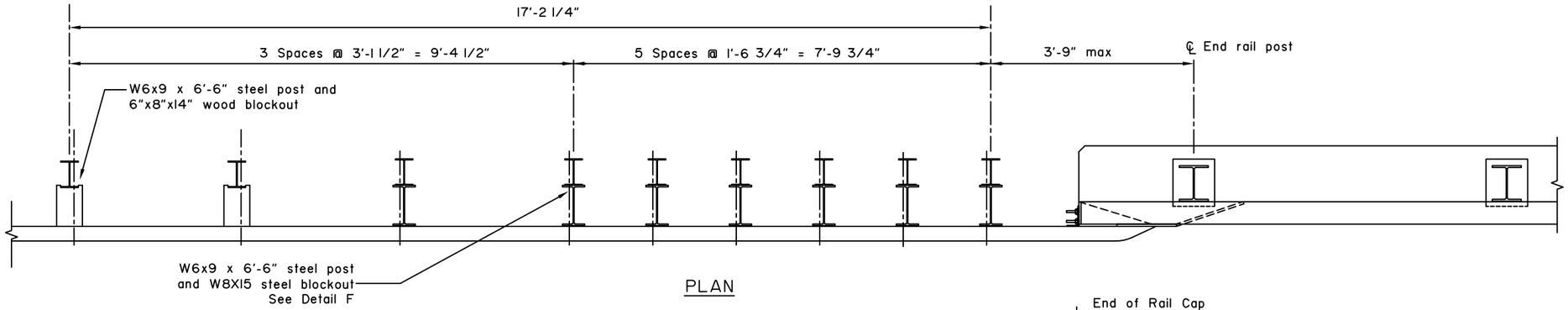

PLAN

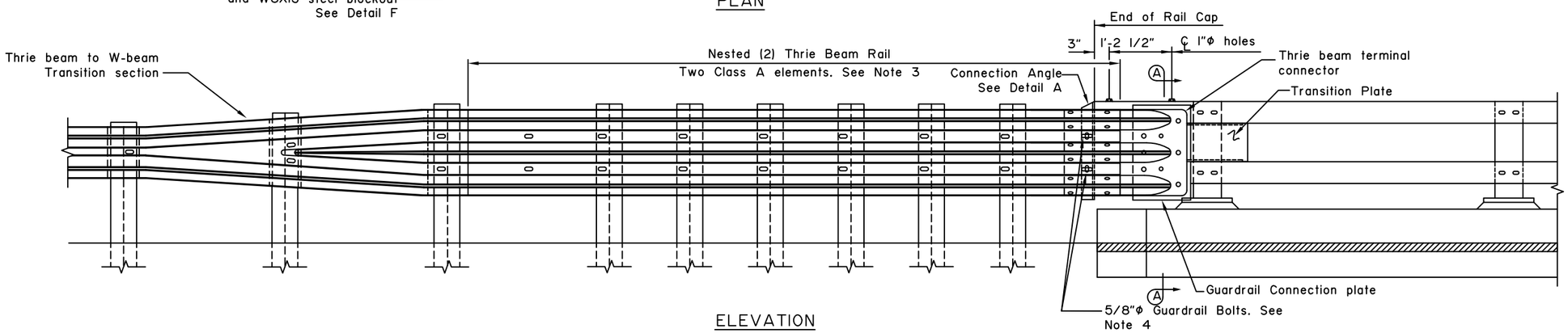

ELEVATION

GENERAL NOTES

1. All guardrail and guardrail connection hardware to conform to AASHTO M-180.
   All H.S. Bolts conform to ASTM A325.
   All other steel to conform to ASTM A709 Grade 36.
2. Conform to G-00, G-04S, G-10 for all guardrail details not shown. No Back-up Plates required.
3. Lap approach guardrail to prevent snags from oncoming traffic.
4. Provide 4 1/2" horizontal slot in approach guardrail. Adjust guardrail bolts for sliding fit.
5. This design is approved for NCHRP 350, TL 4.

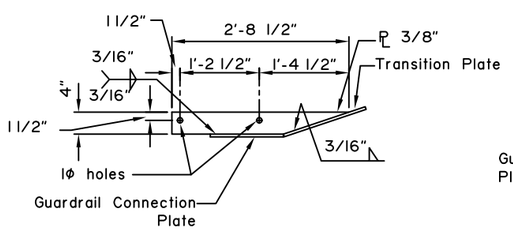

VIEW D-D

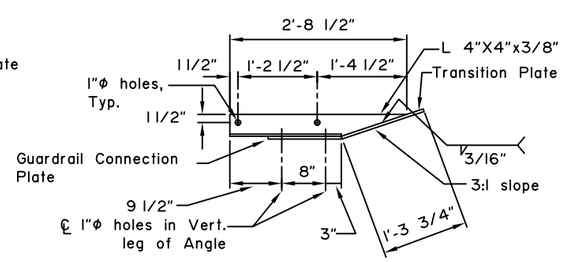

SECTION C-C

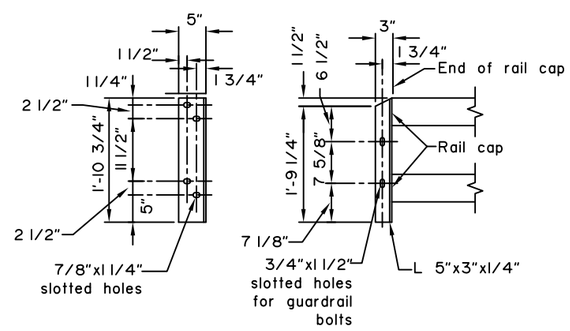

DETAIL A - CONNECTION ANGLE

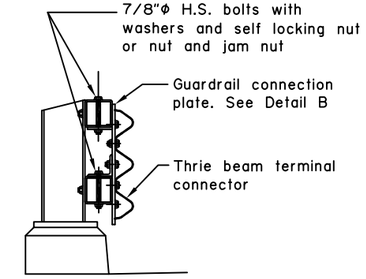

SECTION A-A

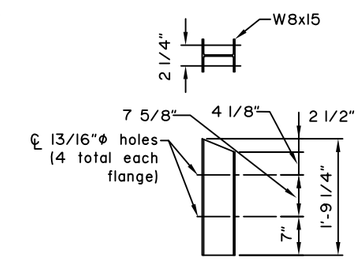

DETAIL F - STEEL BLOCKOUT

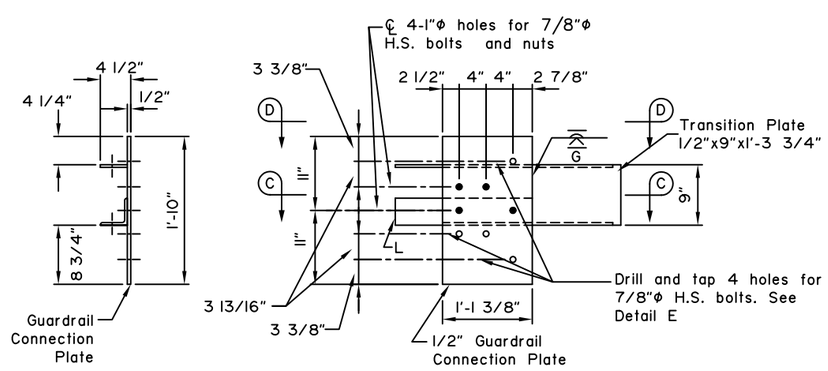

DETAIL B - GUARDRAIL CONNECTION PLATE

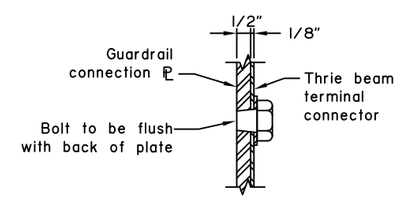

DETAIL E

No Scale

REVISIONS		
Date	Description	By
8/10/11	Post Length	EEM

Sheet 1 of 1

State of Alaska
Department of Transportation
& Public Facilities

BRIDGE RAIL THRIE BEAM TRANSITION

APPROVED

Elmer E. Marx III
No. CE 9490

Date 3/31/15

G-31.01

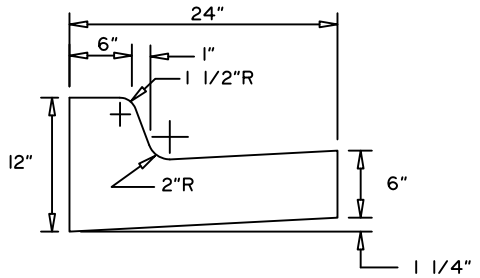

Standard Curb and Gutter

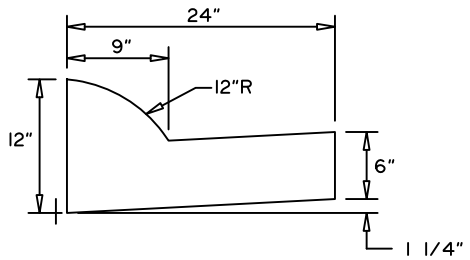

Expressway Curb and Gutter

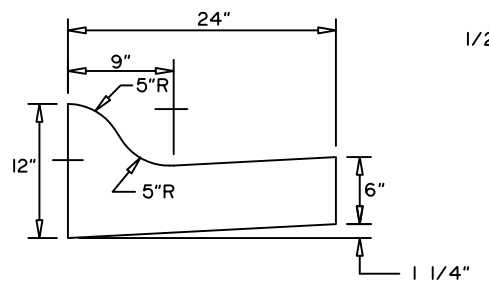

Mountable Curb and Gutter

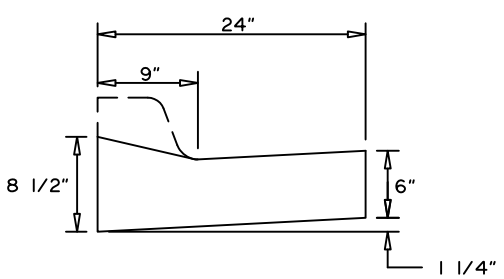

Depressed Curb and Gutter

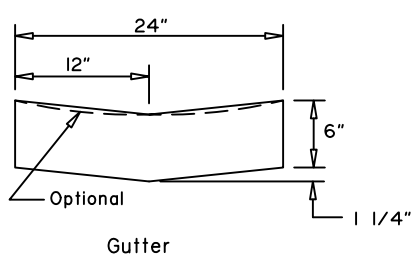

Gutter

CURB and GUTTER DETAILS

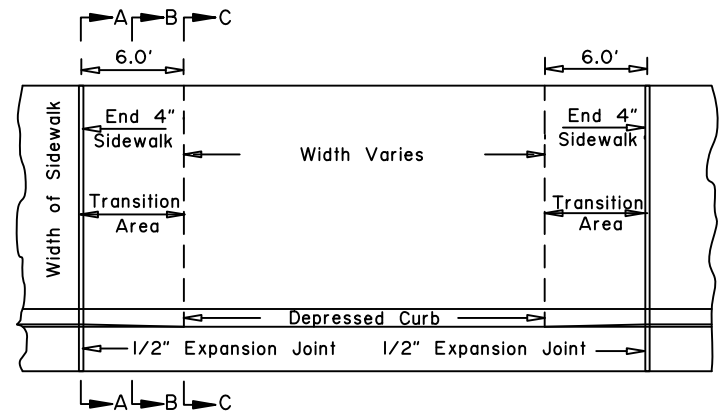

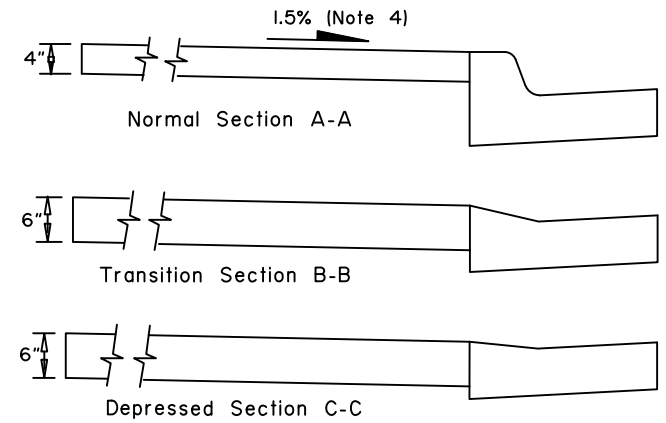

VEHICULAR CURB CUT DETAILS

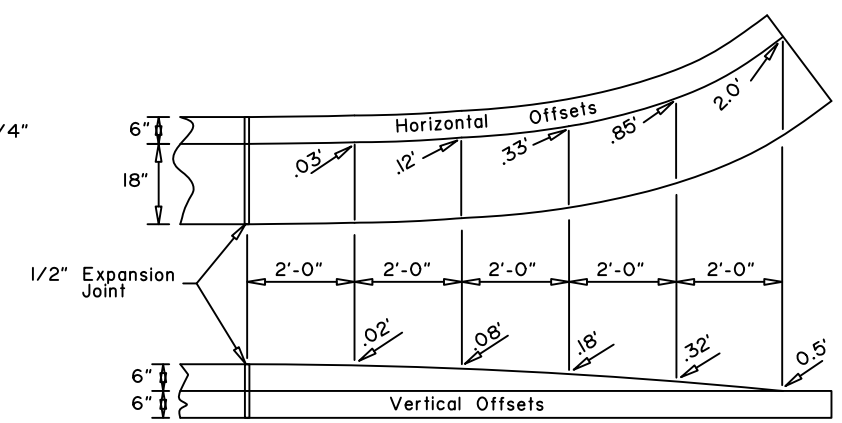

CURB and GUTTER TERMINATION TRANSITIONS

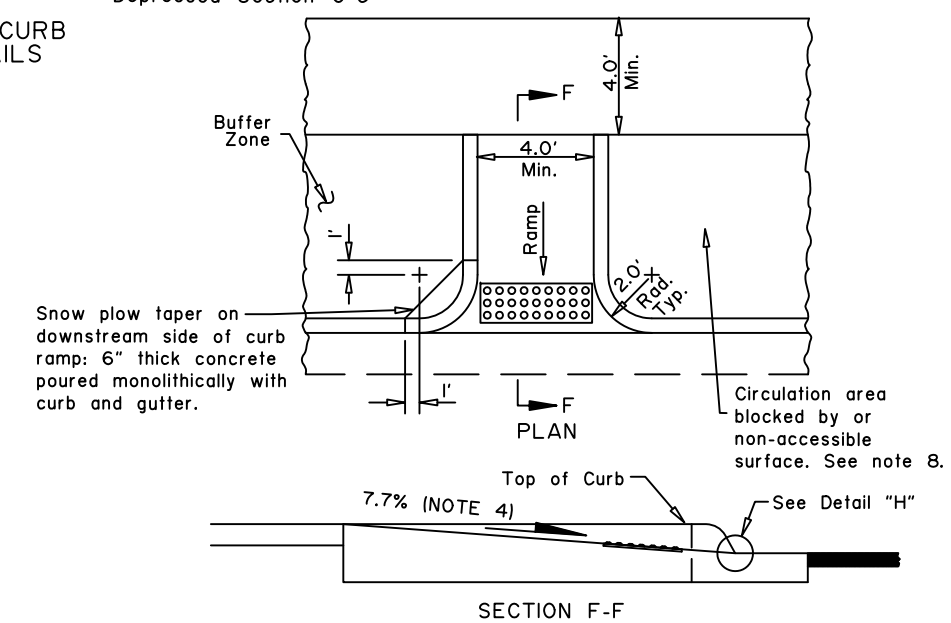

SECTION F-F

RETURNED CURB RAMP for PEDESTRIANS

= Truncated dome surface (see Note 9)

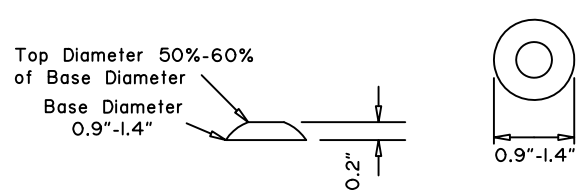

TRUNCATED DOME DETAILS

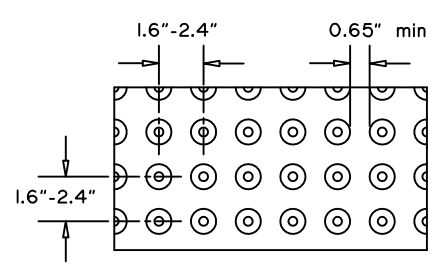

TEXTURE PATTERN DETAIL

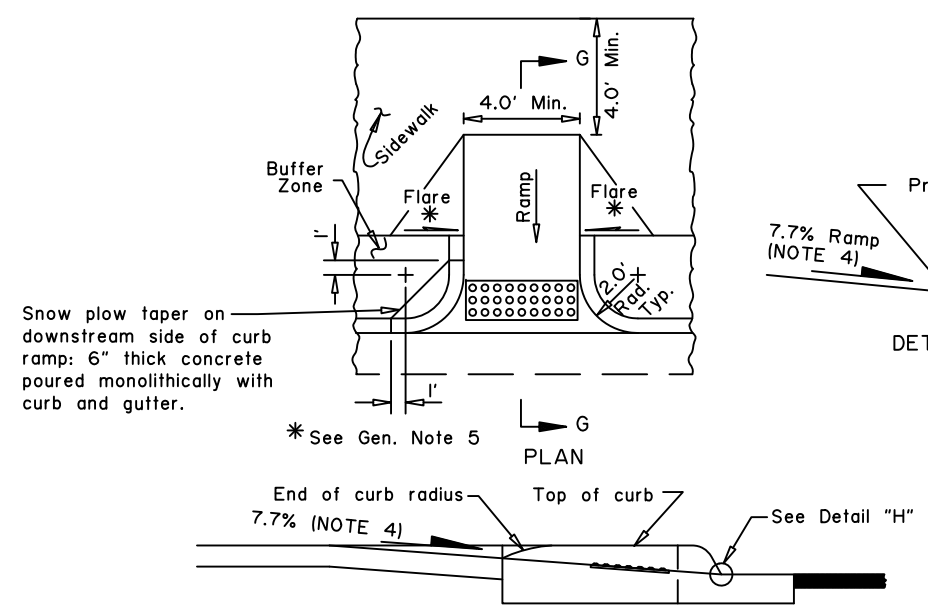

SECTION G-G

RETURNED CURB RAMP with SIDEWALK for PEDESTRIANS

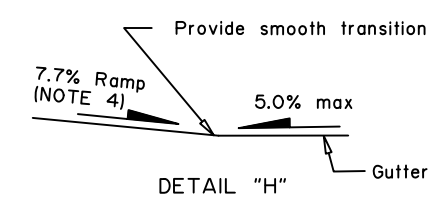

DETAIL "H"

GENERAL NOTES:

1. Use the type of curb and/or gutter specified on the plans.
2. Use Mountable or Expressway curbs on medians and traffic islands.
3. Construct ramp runs and landings of concrete, regardless of whether the sidewalk is asphalt or concrete.
4. Construct ramp slopes 7.7% or flatter, flare slopes 8.3% or flatter, and sidewalk cross slopes 1.5% nominal (1.0% min. and 2.0% max). If conditions require, the Engineer may increase ramp slopes to 8.3% maximum. Construct grade breaks perpendicular to ramp runs.
5. Do not construct flare slopes steeper than 10.0% measured parallel to the curb line, ramp slopes steeper than 8.3%, or sidewalk cross slopes steeper than 2.0%, except as provided under Note 6. These are the steepest slopes allowed by law.
6. Where sidewalk slope makes it necessary to lengthen a ramp run to avoid exceeding the allowable ramp slope, do not exceed a ramp length of 15 feet. The slope resulting from that run length is acceptable, even if it exceeds the maximum slope shown.
7. Provide a coarse broomed finish on ramp runs perpendicular to the ramp slope.
8. When approved by the Engineer, curb returns may be replaced with flares at locations where access to the side of a ramp run is free of poles, utility boxes, other obstructions, or non-accessible surfaces such as a dirt planter strips. See Standard Drawing I-22 for details.
9. Install 24" detectable warning tiles for the full width of the ramp. Domes shall be in a square pattern. Align truncated dome pattern in the predominant direction of wheelchair travel to permit wheels to roll between domes.
10. These details are compliant with the 2006 ADA Standards for Accessible Design as applicable to transportation facilities.

REVISIONS

Date	Description	By
5/15/89	Added Curb Ramps	Gdo
4/1/93	Revised Detail "H"	Gdo
1/1/96	Gen. Note 3	Gdo
12/1/99	Delete Flared Ramp	KJS
5/31/12	ADA Updates	JCJ
3/31/15	Slopes and cross slopes	JCJ

State of Alaska
Department of Transportation
& Public Facilities

CURB CUT, CURB & GUTTER AND CURB RAMP DETAILS

APPROVED

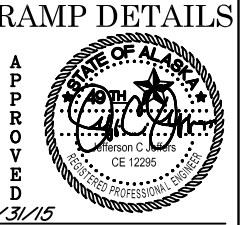

Date 3/31/15

I-21.03

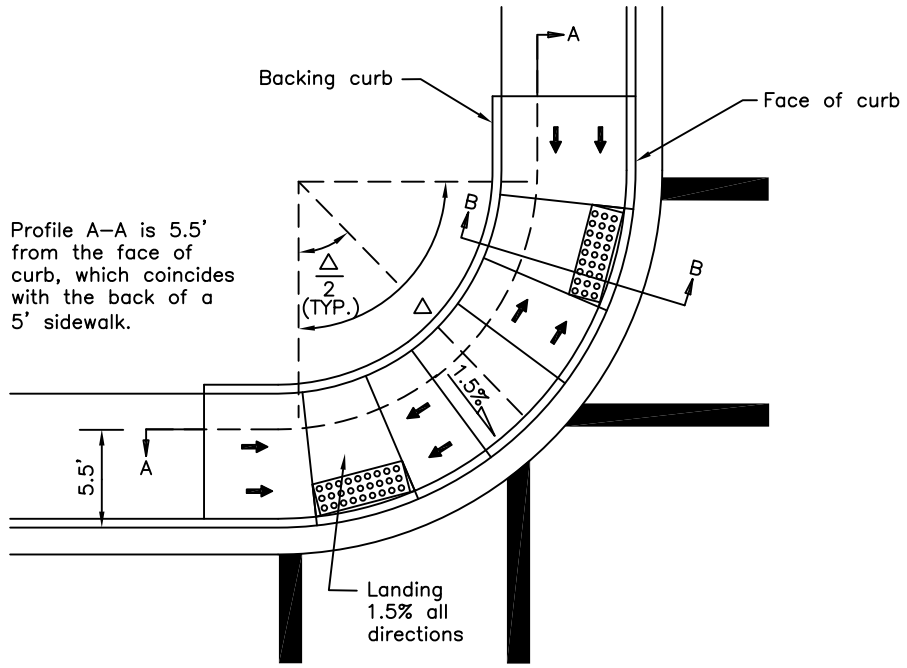

TWO CROSSING DIRECTIONS

At corner

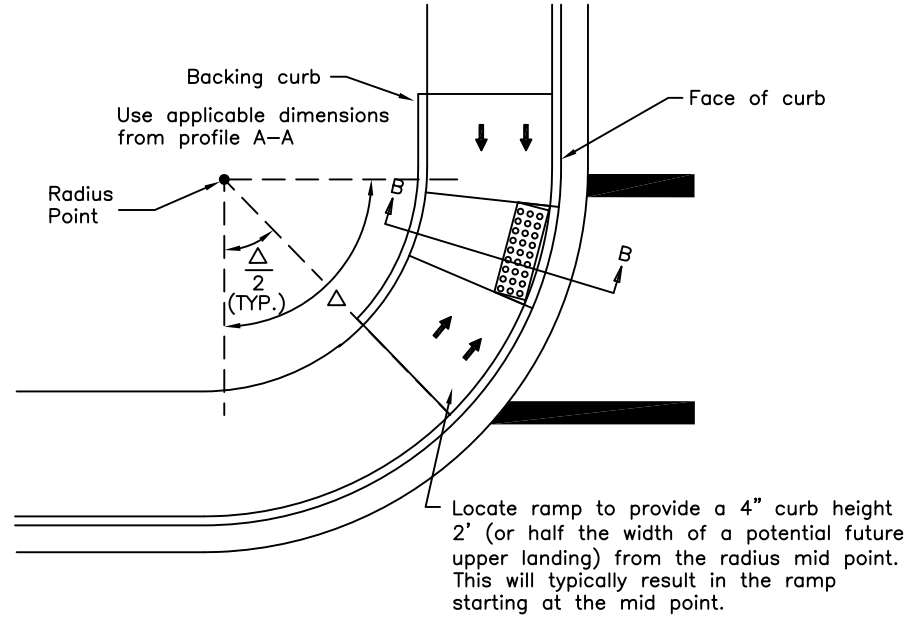

ONE CROSSING DIRECTION

At corner

Truncated dome surface see note 12

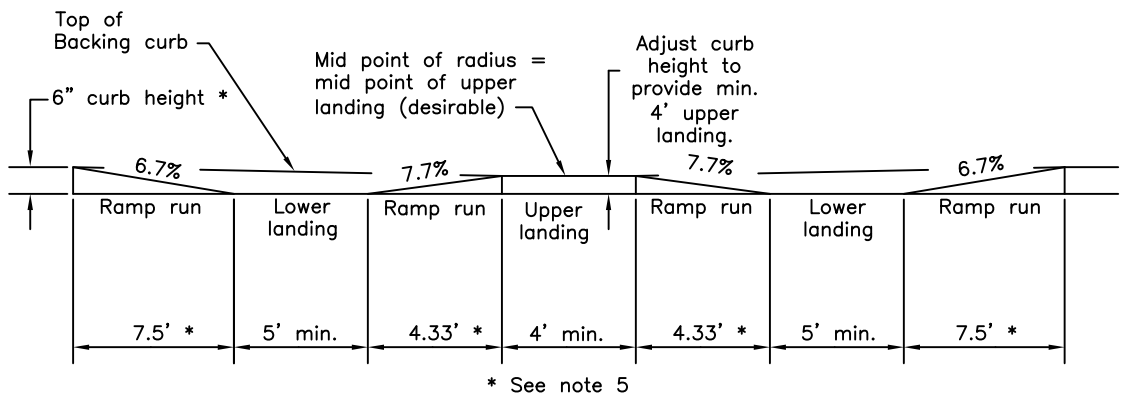

* See note 5

PROFILE A–A

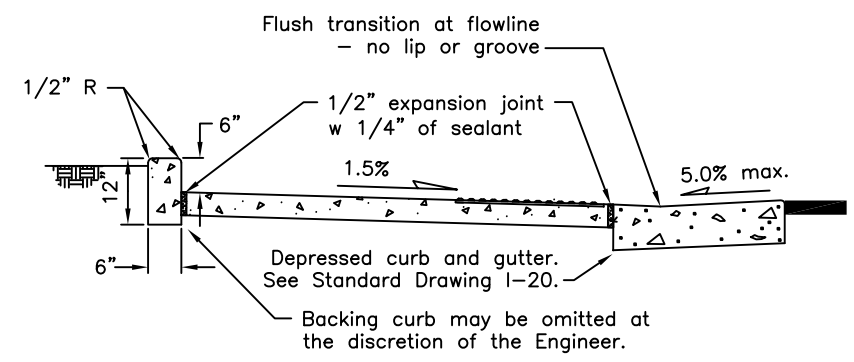

SECTION B–B

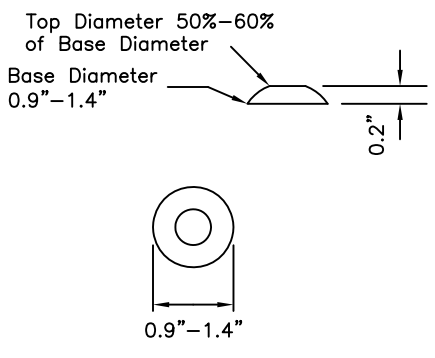

TRUNCATED DOME DETAIL

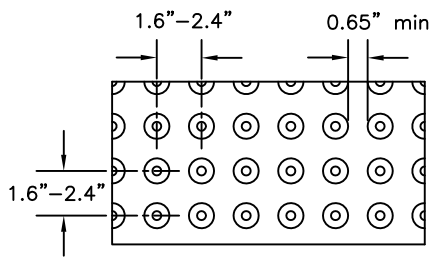

TEXTURE PATTERN DETAIL

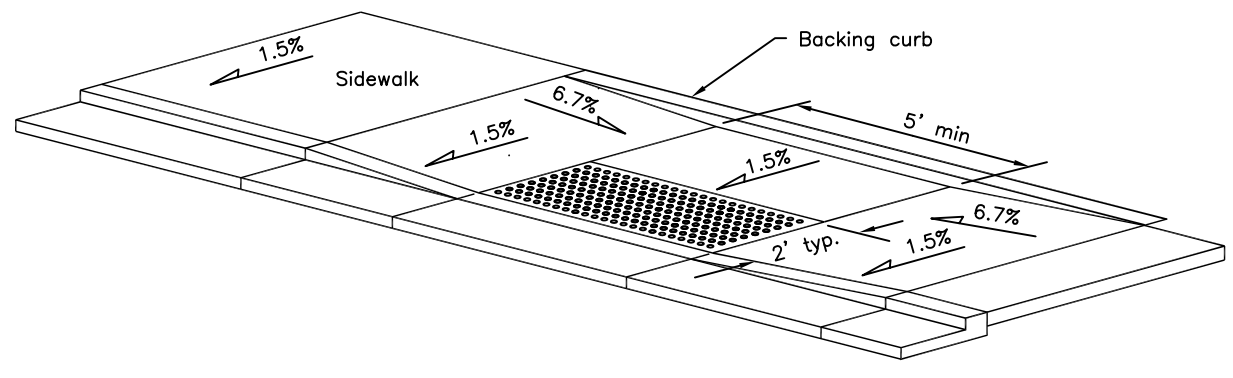

MID–BLOCK

GENERAL NOTES

1. Parallel curb ramps are typically used when the sidewalk is at least 4' wide but not wide enough for perpendicular ramps.
2. When one curb ramp is installed in a curb radius to serve both directions of pedestrian traffic, construct it in accordance with the Mid–Block detail.
3. See plans for ramp type at particular locations.
4. Construct ramp runs and landings of concrete, regardless of whether the sidewalk is asphalt or concrete.
5. Ramp run lengths are shown for 6" curb heights and no longitudinal sidewalk slope. For other heights and slopes, increase or decrease run and flare lengths to maintain the slopes shown.
6. Construct ramp slopes 7.7% or flatter, and sidewalk cross slopes at 1.5% nominal (1.0% min. and 2.0% max). If conditions require, the Engineer may increase slopes in accordance with Note 7. Construct grade breaks perpendicular to ramp runs.
7. Do not cpan
8. onstruct ramp slopes steeper than 8.3% or sidewalk cross slopes steeper than 2.0%, except as provided under Note 8. These are the steepest slopes allowed by law.
9. Where sidewalk slope makes it necessary to lengthen a ramp run to avoid exceeding the allowable ramp slope, do not exceed a ramp length of 15 feet. The slope resulting from that run length is acceptable, even if it exceeds the maximum slope shown.
10. Provide a coarse broomed finish running perpendicular to the curb on ramp runs and upper landings and parallel to the curb on lower landings.
11. Locate lower landings within the inner edges of marked crosswalks or, if crosswalks are not marked, within the area a standard marked crosswalk would enclose. See Standard Drawing T–23 for standard crosswalk layout.
12. Drainage inlets should not be located within marked crosswalks or, if crosswalks aren't marked, within the area a standard marked crosswalk would enclose. If that is unavoidable, install accessible grates, with openings no greater than 1/2" in any direction.
13. Install 24" detectable warning tiles for the full width of the ramp. Domes shall be in a square pattern. Align truncated dome pattern in the predominant direction of wheelchair travel to permit wheels to roll between the domes.
14. These details are compliant with the 2006 ADA Standards for Accessible Design as applicable to transportation facilities.

REVISIONS

Date	Description	By
2/28/03	Added del. warnings	TGM
5/31/12	ADA Updates	JCJ
3/31/15	Slopes and cross slopes	JCJ

Sheet 1 of 1

State of Alaska
Department of Transportation
& Public Facilities

PARALLEL CURB RAMP

APPROVED

STATE OF ALASKA 49TH Jefferson C Jeffers CE 12295 REGISTERED PROFESSIONAL ENGINEER

Date 3/31/15

I-21.03

I-22.03

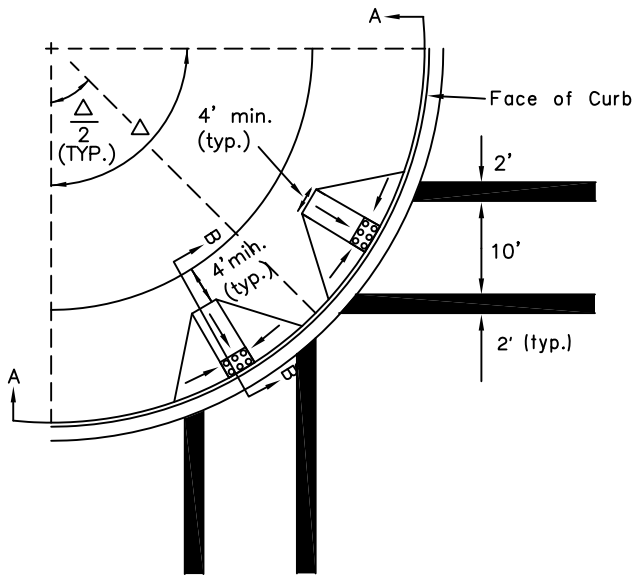

TWO CROSSING DIRECTIONS

At corner

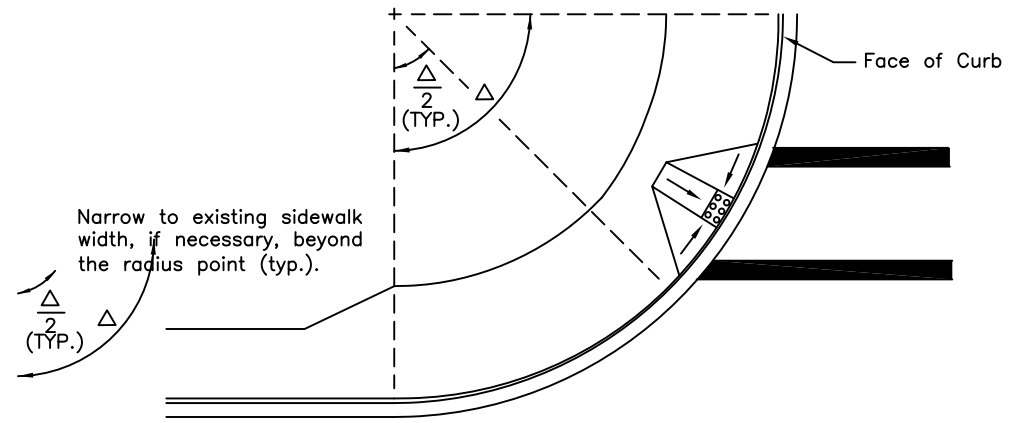

ONE CROSSING DIRECTION

At corner

TRUNCATED DOME SURFACE
SEE NOTE 14

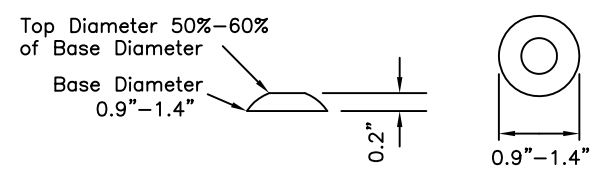

TRUNCATED DOME DETAILS

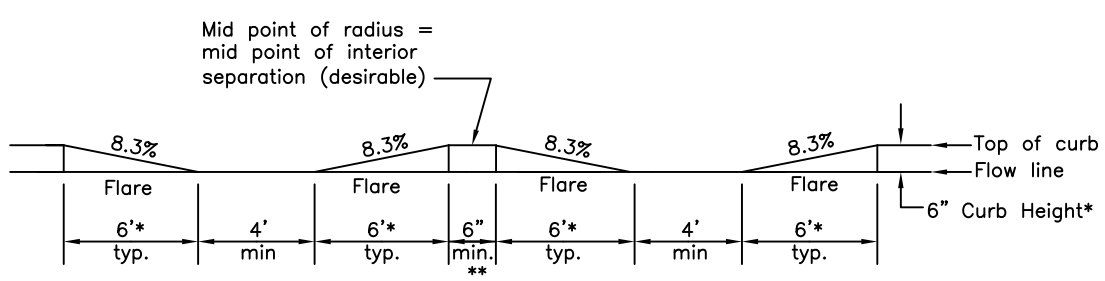

PROFILE A–A

** Adjust width of inner separation to keep ramp runs within the inner edges of marked crosswalks or, if crosswalks are not marked, within the area a standard marked crosswalk would enclose.

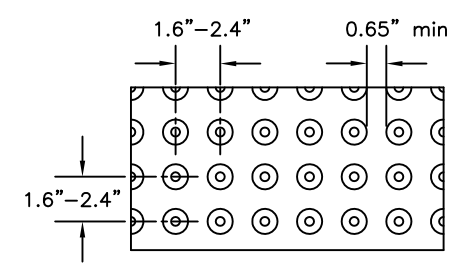

TEXTURE PATTERN DETAIL

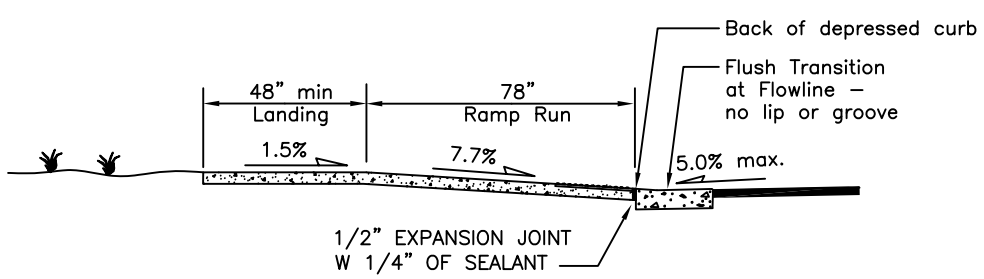

SECTION B–B

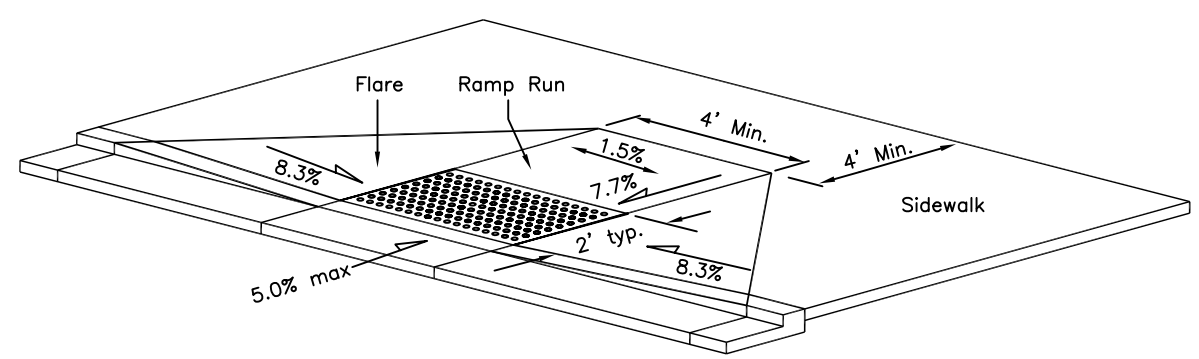

MID–BLOCK

GENERAL NOTES

1. Perpendicular curb ramps require approximately 12' of sidewalk width. Use parallel or combination parallel/perpendicular curb ramps for narrower widths.
2. When one curb ramp is installed in a curb radius to serve both directions of pedestrian traffic, construct it in accordance with the Mid–Block detail.
3. See plans for ramp type at particular locations.
4. Ramp runs shall be perpendicular to the face of curb.
5. Construct ramp runs, flares, and upper turning space of concrete, regardless of whether the sidewalk is asphalt or concrete.
6. Ramp run and flare lengths are shown for 6" curb heights shown and no longitudinal sidewalk slope. For other heights and slopes, increase or decrease run and flare lengths to maintain the slopes shown.
7. Construct ramp slopes 7.7% or flatter, flare slopes 8.3% or flatter, and sidewalk cross slopes at a nominal 1.5% (1.0% min., 2.0% max). If conditions require, the Engineer may increase slopes in accordance with Note 8. Construct grade breaks perpendicular to ramp runs.
8. Do not construct ramp slopes steeper than 8.3%, flare slopes steeper than 10.0% measured parallel to the curb line, or sidewalk cross slopes steeper than 2.0%, except as provided under Note 9. These are the steepest slopes allowed by law.
9. Where sidewalk slope makes it necessary to lengthen a ramp run to avoid exceeding the allowable ramp slope, ramp shall not exceed 15 feet. The slope resulting from that run length is acceptable, even if it exceeds the maximum slope shown.
10. Provide a coarse broomed finish running parallel to the curb on ramp runs and flares.
11. Provide turning space (4'x4' min.) at the top of curb ramps. Provide clear area (4'x4' min) beyond the bottom grade break within the inner edges of marked crosswalks or, if crosswalks are not marked, within the area a standard marked crosswalk would enclose. See Standard Drawing T–23 for standard crosswalk layout.
12. Drainage inlets should not be located within marked crosswalks or, if crosswalks are not marked, within the area a standard marked crosswalk would enclose. If that is unavoidable, install accessible grates, with openings no greater than 1/2" in any direction.
13. When approved by the Engineer, flares may be replaced with a curb at locations where access to the side of a ramp run is blocked by poles, utility boxes, other obstructions, or by a non–accessible surface such as a dirt planter strip. See Standard Drawing I–20 for details.
14. Install 24" detectable warning tiles for the full width of the ramp. Arrange domes in a square pattern. Align truncated dome pattern in the predominant direction of wheelchair travel to permit wheels to roll between the domes.
15. These details are complaint with the 2006 ADA Standards for Accessible Design as applicable to transportation facilities.

REVISIONS

Date	Description	By
2/28/03	Added det. warnings	TGM
5/31/12	ADA Updates	JCJ
3/31/15	Ramp and cross slopes	JCJ

Sheet 1 of 1

State of Alaska
Department of Transportation
& Public Facilities

PERPENDICULAR CURB RAMP

APPROVED

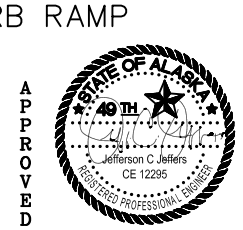

Date 3/31/15

I–22.03

M-24.00

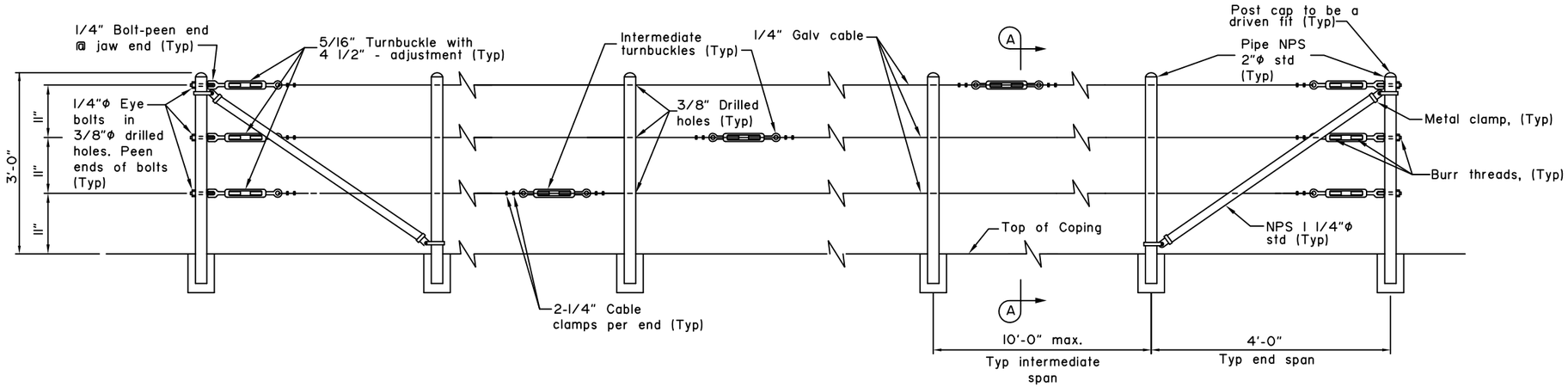

ELEVATION

GENERAL NOTES:

1. Place intermediate turnbuckles in adjacent spans. Maximum span between turnbuckles is 200'-0".
2. Galvanize all posts, cable and hardware.
3. Install posts plumb.
4. Alignment of holes in posts may vary to conform to slope of top of wall.
5. Line posts shall be braced horizontally and trussed diagonally in both directions at intervals not to exceed 1000'-0" and at each end.
6. Typical end spans, braced in both directions, shall be constructed at changes in line where the angle of deflection is 15° or more.
7. Provide thimbles at all cable loops.

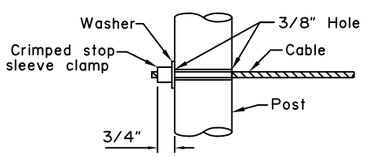

ALTERNATIVE DEAD END ANCHORAGE

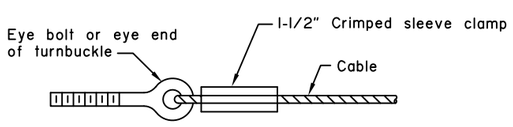

ALTERNATIVE CABLE CONNECTION

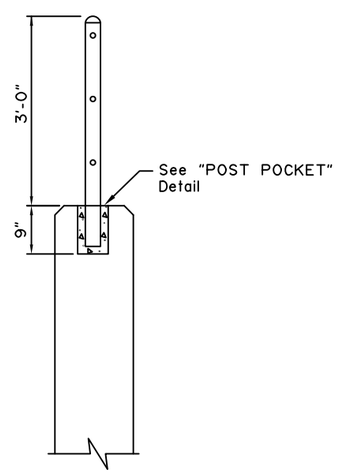

SECTION A-A
CAST IN WALL OR COPING

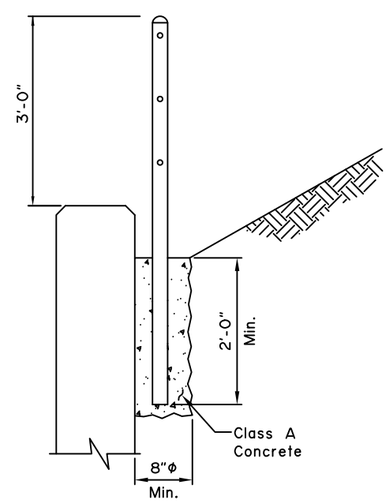

SECTION A-A
BEHIND WALL WITHOUT GUTTER

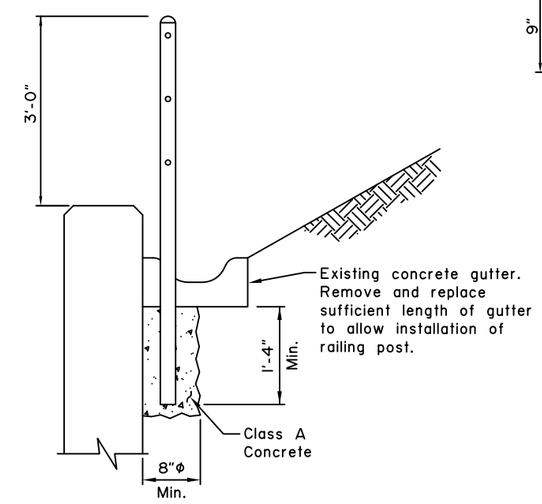

SECTION A-A
BEHIND WALL WITH GUTTER

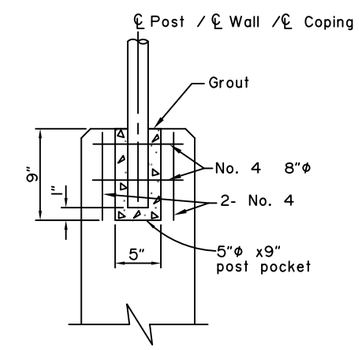

POST POCKET

REVISIONS		
Date	Description	By

Sheet 1 of 1

State of Alaska
Department of Transportation
& Public Facilities

CABLE SAFETY RAIL

APPROVED

STATE OF ALASKA 49TH
Travis W. Arndt
No. CE 10805
REGISTERED PROFESSIONAL ENGINEER

Date 03/31/15

No Scale

M-24.00

T-57.01

MASTARM DATA							
Mastarm Data		End Section Incl. Slip Joint			Base Section		
Length (ft.)	Allowed Deflection Due to Galloping (in.)	Free End O.D. (in.)	Length (ft.)	Thick (in.)	Length (ft.)	Fixed End O.D. (in.)*	Thick (in.)
70	12.0	7.5	40.0	0.2092	32.9	16.7	0.375
75	12.0	7.5	40.0	0.2092	37.9	17.4	0.375

*Fixed end diameter measured at connection to baseplate.

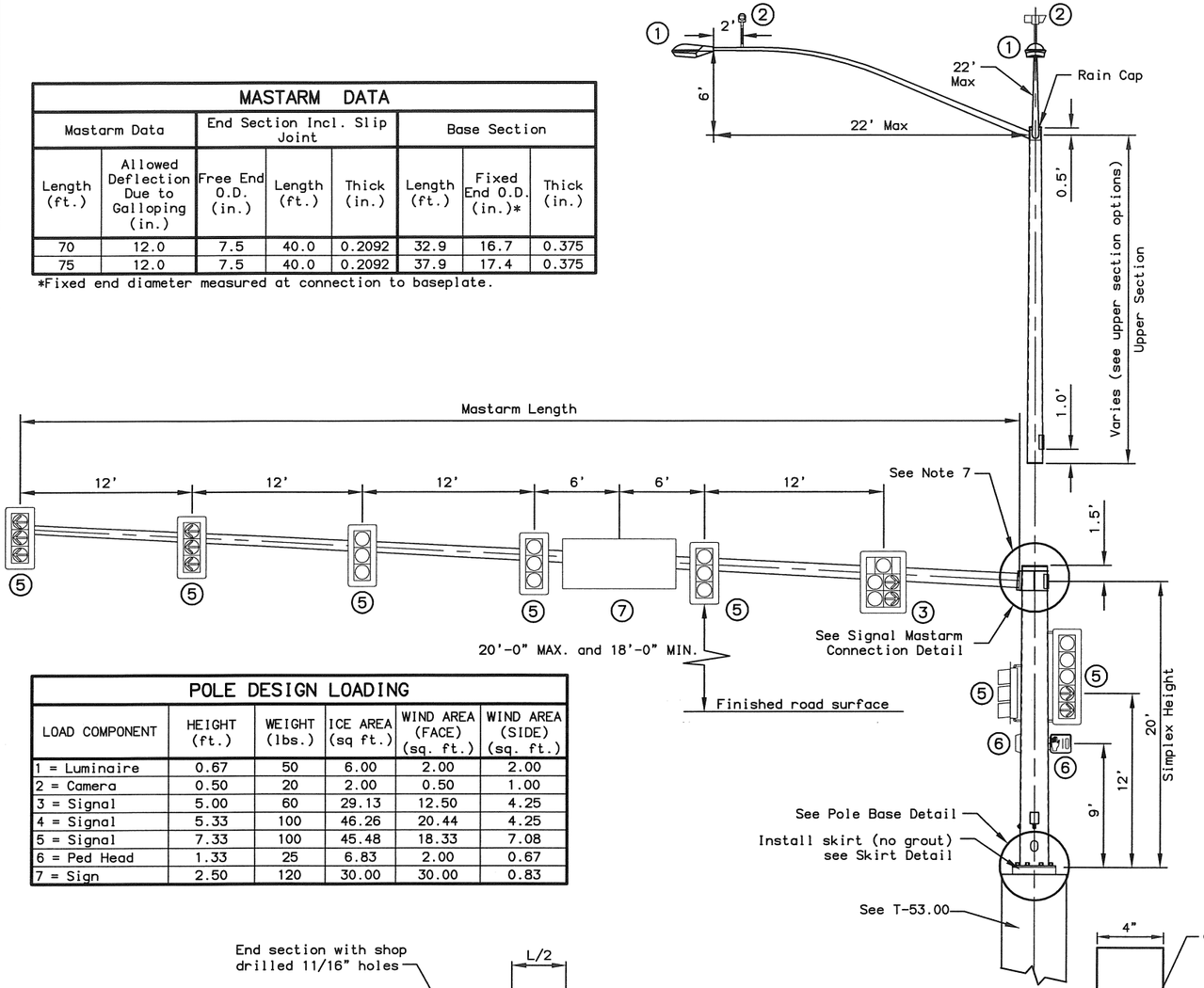

ELEVATION VIEW
NTS

POLE DESIGN LOADING					
LOAD COMPONENT	HEIGHT (ft.)	WEIGHT (lbs.)	ICE AREA (sq ft.)	WIND AREA (FACE) (sq. ft.)	WIND AREA (SIDE) (sq. ft.)
1 = Luminaire	0.67	50	6.00	2.00	2.00
2 = Camera	0.50	20	2.00	0.50	1.00
3 = Signal	5.00	60	29.13	12.50	4.25
4 = Signal	5.33	100	46.26	20.44	4.25
5 = Signal	7.33	100	45.48	18.33	7.08
6 = Ped Head	1.33	25	6.83	2.00	0.67
7 = Sign	2.50	120	30.00	30.00	0.83

MATERIAL REQUIREMENTS	
ALL ASSEMBLIES	
Steel Through 1/2" Thick	ASTM A572 or A595
Steel Over 1/2" Thick	AASHTO M270 F3 (50ksi)
Finish	AASHTO M111 & M232
Mastarm Bolts	AASHTO M164
Anchor Rods	See T-53.00
POLE (LOWER SECTION)	
Design Length	21.5'
Section Shape	Round
Simplex Height	20'
Fixed End Diameter	21" O.D.
Taper	0.14"/ft
Tube Thickness	0.375"
Base Plate	36" O.D. X 2.25"
Bolt Circle	30"
Signal Arm Plate	26" X 26" X 2.25"
Top Ring Thickness	0.375"
Bottom Ring Thickness	0.375"
Gusset Plate Thickness	0.375"
Handhole Cover Thickness	10 ga
Pole Skirt Thickness	10 ga
MASTARM	
Design Length	75'
Section Shape	Round
Taper	0.14"/ft
Tube Thickness	Mastarm Data
Mastarm Rise	3.0 Degrees
Base Plate	26" X 26" X 2.25"
Bolt Circle	8 Vertical O.C.
Mastarm Bolts	1.5" X 4.5"

NOTES:

1. Provide pole assemblies meeting the following design criteria; 2001 AASHTO Standard Specifications for Structural Supports for Highway Signs, Luminaires and Traffic Signals, the latest edition of the Alaska Standard Specifications for Highway Construction including Standard Modifications and, Special Provisions. Design for a basic wind speed of 100 mph, Fatigue Category III, with galloping. Measure allowed deflection due to galloping at the free end of mastarm.
2. Provide poles to accommodate the maximum length shown in the Mastarm Data with the given loads, dimensions and material requirements.
3. This drawing shows loads (signs and signals) to be used by manufacturers when designing poles. It does not show actual loading of poles/mastarms on individual projects. This pole/mastarm design may be used without further analysis if the following conditions are met:
   - The guide sign (load #7) is attached to the mastarm base section and,
   - Not more than 4 traffic signals and/or signs are attached to the end section of the mastarm.

   If these conditions are not met, this standard pole/mastarm design may only be used if design computations are submitted that demonstrate conformance to design criteria (Note 1) using actual loads. Note: Devices with less than 1 square foot of projected area may be added to the mastarm without causing a need for additional design computations.
4. The manufacturer is to determine weld sizes. All welds and testing shall conform to the latest edition of the Structural Welding Code AWS D1.1. Provide visual test (VT) of 100% of all welds. Provide magnetic particle test (MT) of 100% of all fillet welds. Provide Radiographic (RT) or ultrasonic test (UT) of 100% of all complete joint penetration welds and a random 25% of all partial joint penetration longitudinal seam welds.
5. Fabricate pole tubes from no more than 2 pieces of steel. When using 2 pieces, place the longitudinal welded seams directly opposite one another.
6. Fabricate luminaire arms and connections according to Standard Drawing L-03.10.
7. Provide permanent tags on all pole sections per Section 740 Table 740-1 of the Specifications. Provide a rain cap when no upper section is specified.
8. The Department will reject damaged or defective poles for any of the following; variances from approved shop drawings, variances from material requirements, sections more than 2-percent out of round, sections bowed more than 1-inch throughout the length of the pole, mastarm, or segment and, damaged or dented finishes.
9. Drill a 1" maximum diameter hole at each traffic signal location. Orient the hole on the horizontal axis of mastarms.
10. Install pole plumb by ensuring the side opposite the mastarm is vertical in its final deflected position.
11. Align welded seams on adjacent sections of mastarms to form continuous straight seams the length of the mastarm. Mechanically force mastarm sections together for a snug fit.
12. Clean and remove dirt, burrs, mill scale, and excess galvanization on all faying surfaces and threaded parts before assembly. Lubricate the threads of all bolts and nuts with lubricant containing a visible dye. Tighten all bolts according to section 504 of the specifications.

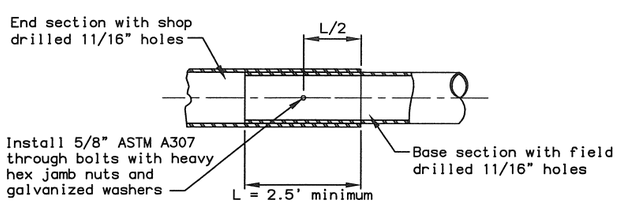

MASTARM SLIP SPLICE ELEVATION DETAIL
NTS

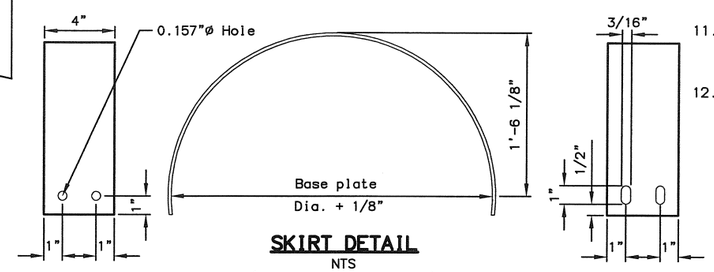

SKIRT DETAIL
NTS
(Two required per pole)

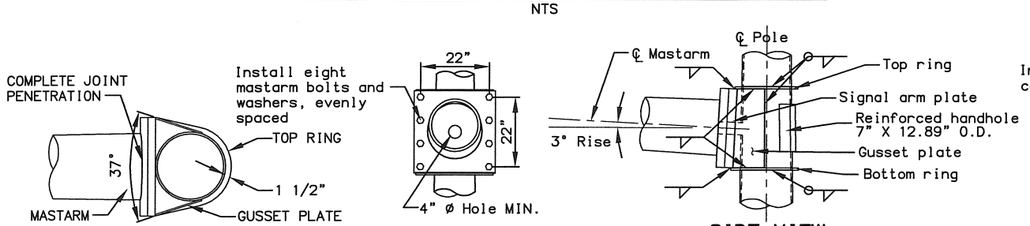

PLAN VIEW FRONT VIEW SIDE VIEW

SIGNAL MASTARM CONNECTION DETAIL
NTS
(Elevation view of a ring stiffened built-up box)

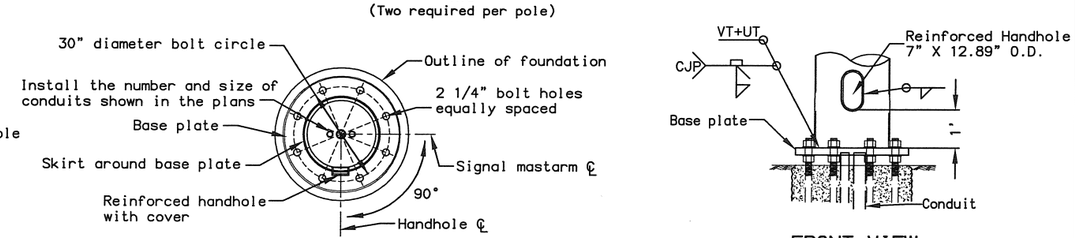

PLAN VIEW
(Shown without anchor bolts and nuts for clarity)

FRONT VIEW
(Skirt omitted for clarity)

POLE BASE DETAIL
NTS

REVISIONS		
Date	Description	By
07/15/14	Bolt circle leader corrected	CMW

SHEET 1 OF 2

State of Alaska
Department of Transportation
& Public Facilities

SIGNAL POLE
WITH 70' TO 75' MASTARM,
LOWER SECTION

APPROVED
STATE OF ALASKA 49TH CHARLES M. WAGNER CE 11155 REGISTERED PROFESSIONAL ENGINEER
Date 07/15/14

T-57.01 Sheet 1 of 2

T-57.01

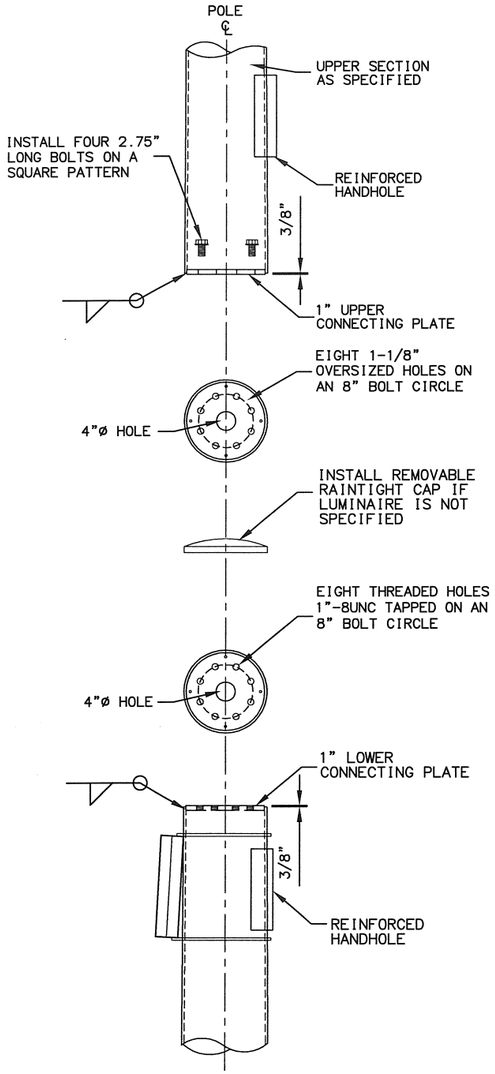

POLE CONNECTING DETAIL

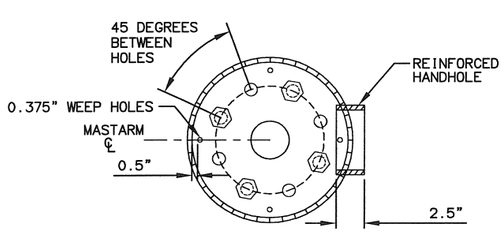

PLATE DETAILS

MATERIAL REQUIREMENTS	
MATERIALS	
Tube Material	A572, A595 GR A or A1011 50 ksi min
Single Luminaire Tube	11 ga
Double Luminaire Tube	11 ga
Davit Luminaire Tube	7 ga
Lower Connecting Plate	AASHTO M270 F3
Upper Connecting Plate	AASHTO M270 F3
Concentric Reducer	A572 or A595 GR A
Connection Tube	A572 or A595 GR A
Luminaire Arm Materials	See L-03.10
Upper Section Attachment Bolts	1"-8UNC / AASHTO M164
Luminaire Attachment Bolts	3/4"-10 / AASHTO M164
Slip-fit Through Bolt	5/8" / AASHTO M164
Finish	AASHTO M111 & M232
Handhole	7" X 12.89" O.D.
SINGLE LUMINAIRE	
Design Length	22.5'
Section Shape	Round
Fixed End Diameter	17.99" O.D.
Taper	0.14"/ft
Luminaire Arm Details	See L-03.10
DOUBLE LUMINAIRE	
Design Length	17.5'
Section Shape	Round
Fixed End Diameter	17.99" O.D.
Taper	0.14"/ft
Luminaire Arm Details	See L-03.10
DAVIT LUMINAIRE ARM	
Design Height	28.5'
Design Offset	15'
Radius	10'
Section Shape	Round
Fixed End Diameter	17.99" O.D.
Free End Diameter	2.375" O.D.
Taper	0.14"/ft
Concentric Reducer	7 ga
Connection Tube	7 ga

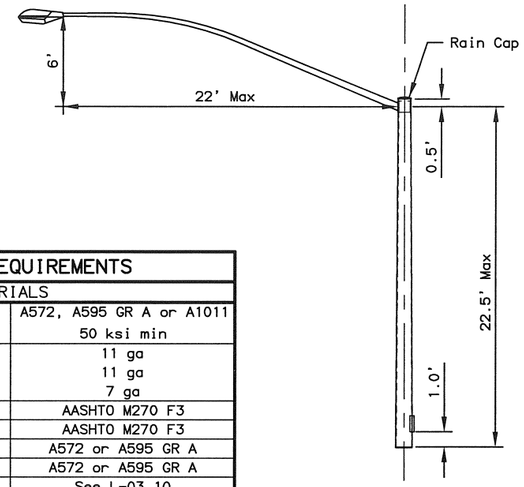

SINGLE LUMINAIRE

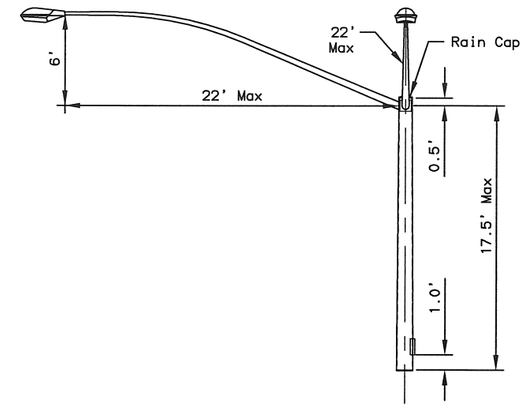

DOUBLE LUMINAIRE

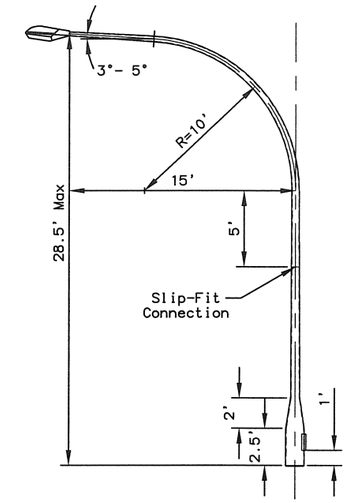

DAVIT LUMINAIRE

UPPER SECTION OPTIONS

NTS

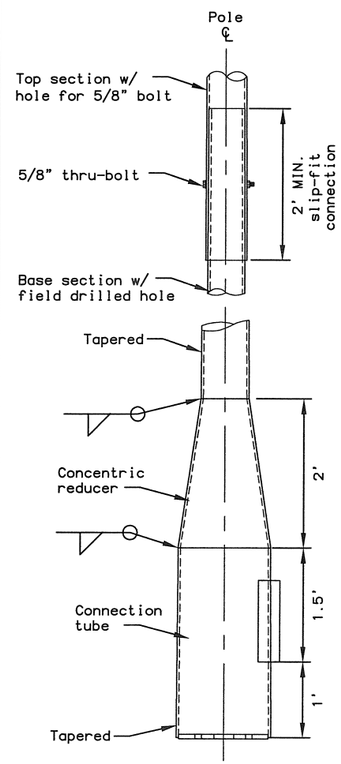

DAVIT CONNECTION DETAIL

NTS

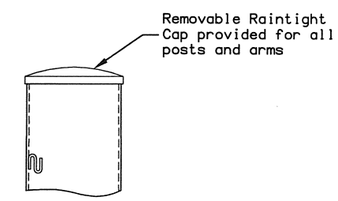

RAIN CAP DETAIL

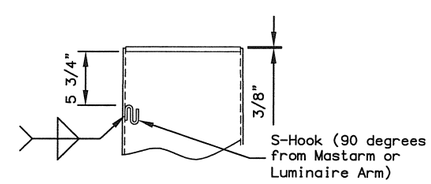

LOWER SECTION POST TOP

NTS

REVISIONS		
Date	Description	By
07/15/14	Bolt circle leader corrected	CMW

SHEET 2 OF 2

State of Alaska
Department of Transportation
& Public Facilities

SIGNAL POLE
WITH 70' TO 75' MASTARM,
UPPER SECTION

APPROVED

STATE OF ALASKA 49TH CHARLES M. WAGNER CE 11155 REGISTERED PROFESSIONAL ENGINEER

Date 07/15/14