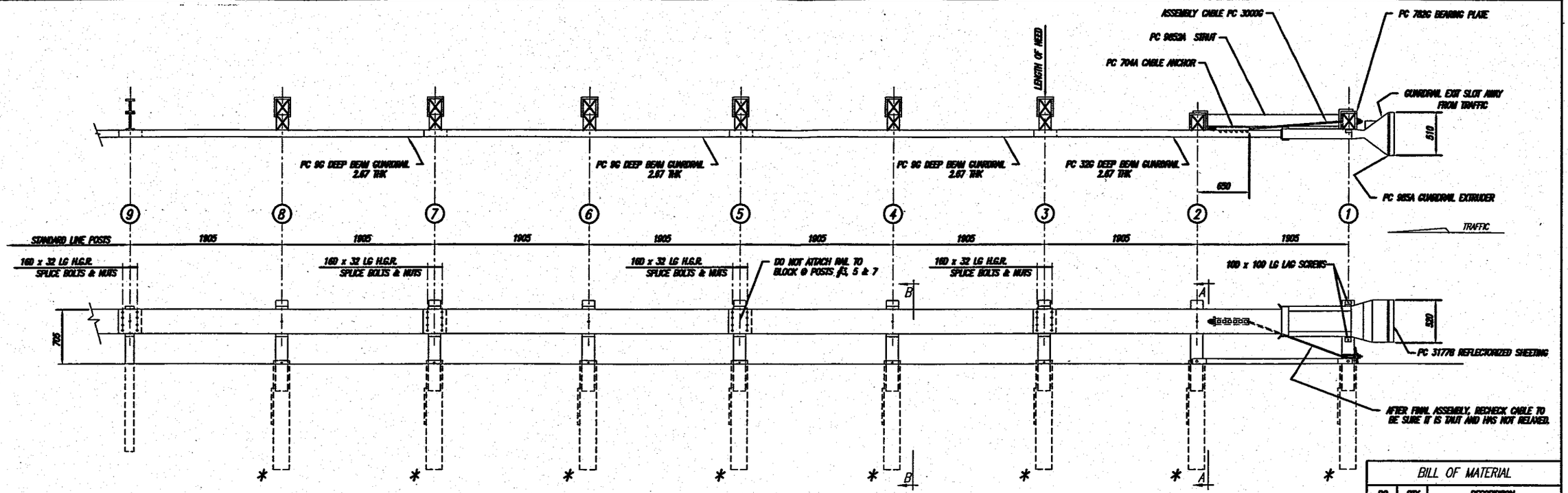

BILL OF MATERIAL		
PC	QTY	DESCRIPTION
9G	3	12/12'6/8'3/S (GUARDRAIL)
32G	1	12/12'6/8'3/S ANC (GUARDRAIL)
704A	1	CABLE ANCHOR BRACKET
705G	1	2" x 5 1/2" PIPE
740G	8	4'6 TUBE SLEEVE
766G	8	1/4" x 18" x 24" SOIL PLATE
782G	1	5/8" x 8" x 8" BEARING PLATE
985A	1	ET-2000 EXTRUDER
3000G	1	CABLE 3/4 x 6'6
3300G	19	5/8" WASHER
3340G	63	5/8" HEX NUT
3360G	32	5/8"ø x 1 1/4" SPLICE BOLT
3478G	16	5/8"ø x 7 1/2" HEX HD BOLT
3497G	8	5/8"ø x 9 1/2" HEX HD BOLT
3500G	1	5/8"ø x 10" POST BOLT
3580G	6	5/8"ø x 18" POST BOLT
3900G	2	1" WASHER
3910G	2	1" HEX NUT
4075B	6	WD BLOCK 1'2 6" x 6" DR
4147B	4	WD 3'9 POST 5 1/2 x 7 1/2
4228G	2	3/8"ø x 4" LAG SCREW
9852A	1	6'3 STRUT
3177B	1	ET-DELINEATOR REFLECTIVE SHEETING

NOTES:
1.) THE 16D FLAT WASHER IS USED UNDER THE NUT, BEHIND THE POST ONLY. NO WASHER IS USED AT THE RAIL.

* NOTE:
6'-6" POST SLEEVE TUBE WITHOUT SOIL PLATE MAY BE USED IN LIEU OF 4'-6" TUBE WITH SOIL PLATE

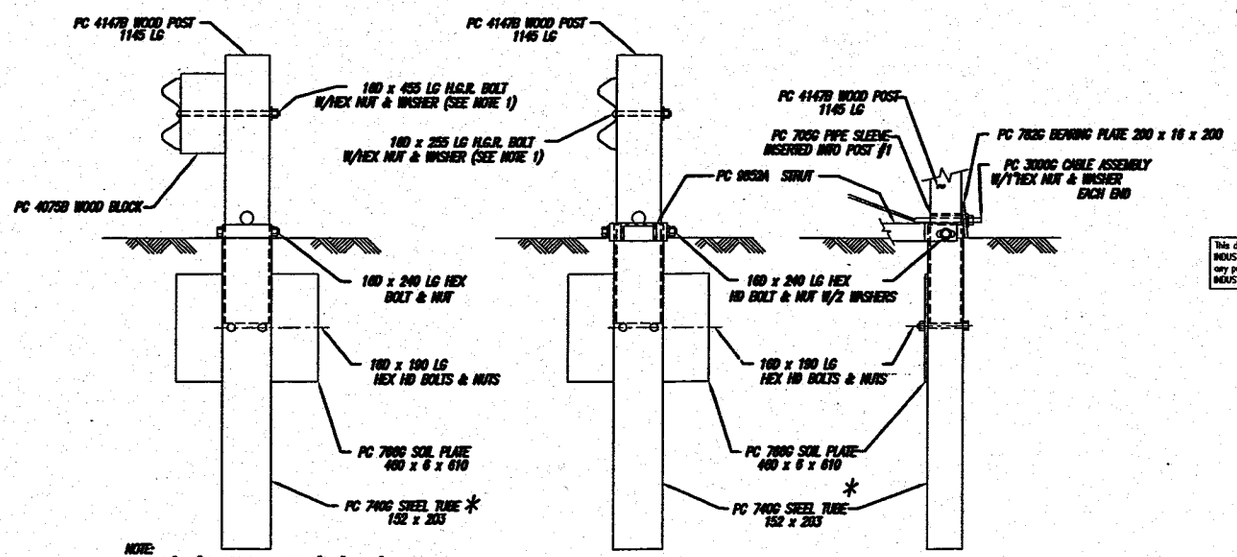

NOTE:
SECTION "B-B" IS SIMILAR @ POST #3, #5, & #7 EXCEPT RAIL IS NOT ATTACHED TO BLOCK.

SECTION "B-B"
(@ POST #4, #6 & #8)

SECTION "A-A"
(@ POST #2)

PARTIAL VIEW @ POST #1

This drawing and the information shown thereon is the sole property of TRINITY INDUSTRIES, INC. Neither the drawing nor such information is to be used for any purpose other than that for which it was specifically furnished by TRINITY INDUSTRIES, INC., nor is any reproduction authorized without written permission.

REV.	CHK'D	BY	DATE	REMARKS

SYRO ET—2000

ET-2000 8 TUBE – ALASKA 3.81 PANELS
PLAN, ELEVATION & SECTIONS

DRAWN	C.C./D.B
CHECKED	B.T./D.D.
APPROVED	
DATE	8-24-00
ENG. FILE #	SS270M
SHT. No.	E1 OF 1
DRAWING No.	SS 270M
REV.	0

CUSTOMER | P.O. No.

TRINITY INDUSTRIES, INC.
DALLAS, TX CENTERVILLE, UT GRAND, OH LIMA, OH FORT WORTH, TX ELIZABETHTOWN, KY

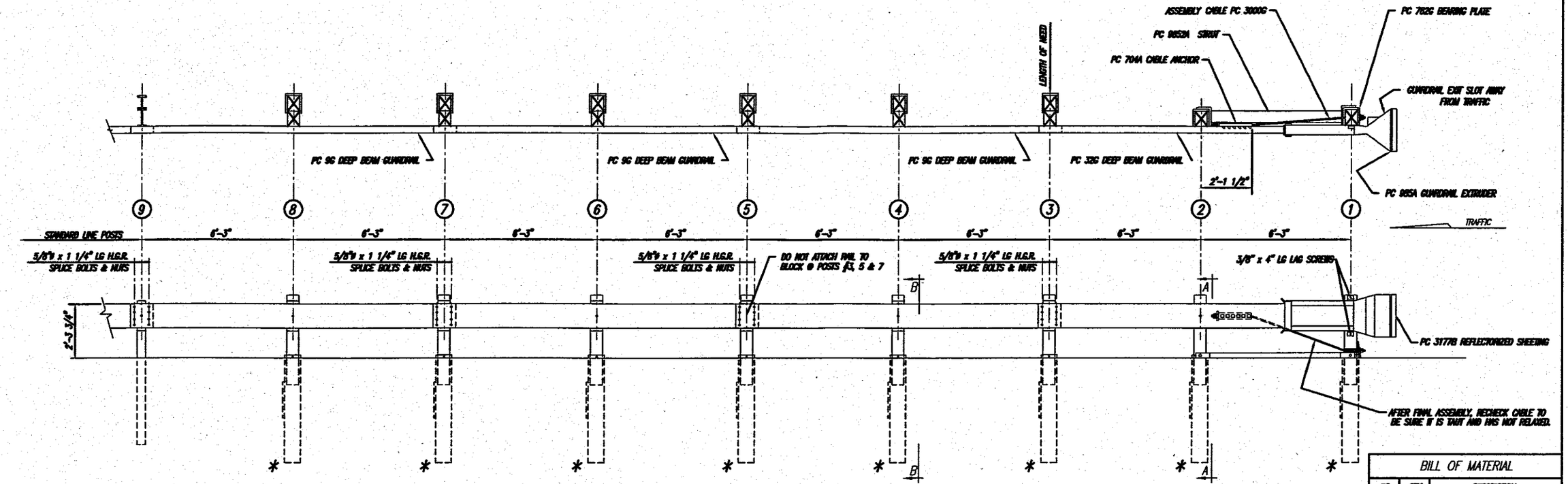

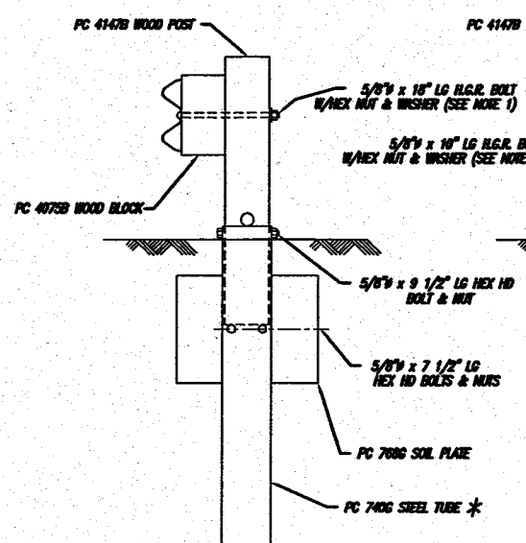

NOTE:
SECTION "B-B" IS SIMILAR @ POST #3, #5 & #7 EXCEPT RAIL IS NOT ATTACHED TO BLOCK.

SECTION "B-B"
(@ POST #4, #6 & #8)

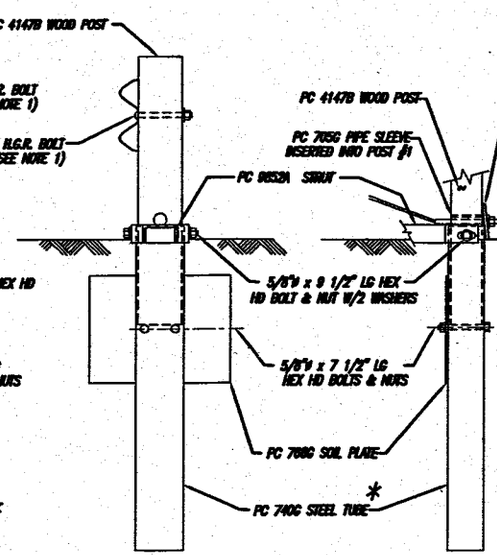

SECTION "A-A"
(@ POST #2)

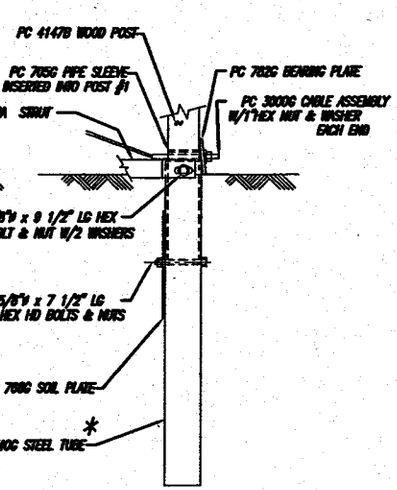

PARTIAL VIEW @ POST #1

NOTES:
1.) THE 5/8" FLAT WASHER IS USED UNDER THE NUT, BEHIND THE POST ONLY. NO WASHER IS USED AT THE RAIL.

* NOTE:
6'-6" POST SLEEVE TUBE WITHOUT SOIL PLATE MAY BE USED IN LIEU OF 4'-6" TUBE WITH SOIL PLATE

This drawing and the information shown thereon is the sole property of TRINITY INDUSTRIES, INC. Neither the drawing nor such information is to be used for any purpose other than that for which it was specifically furnished by TRINITY INDUSTRIES, INC., nor is any reproduction authorized without written permission.

BILL OF MATERIAL

PC	QTY	DESCRIPTION
9G	3	12/12"G/6"S/S (GUARDRAIL)
32G	1	12/12"G/6"S/S ANC (GUARDRAIL)
704A	1	CABLE ANCHOR BRACKET
705G	1	2" x 5 1/2" PIPE
740G	8	4'6 TUBE SLEEVE
768G	8	1/4" x 18" x 24" SOIL PLATE
702G	1	5/8" x 6" x 6" BEARING PLATE
985A	1	ET-2000 EXTRUDER
3000G	1	CABLE 3/4 x 6'6
3300G	19	5/8" WASHER
3340G	63	5/8" HEX NUT
3380G	32	5/8"ø x 1 1/4" SPLICE BOLT
3476G	16	5/8"ø x 7 1/2" HEX HD BOLT
3487G	8	5/8"ø x 9 1/2" HEX HD BOLT
3500G	1	5/8"ø x 10" POST BOLT
3580G	6	5/8"ø x 18" POST BOLT
3900G	2	1" WASHER
3910G	2	1" HEX NUT
4075B	6	WD BLOCK 1"2 6" x 8" BR
4147B	8	WD STD POST 5 1/2 x 7 1/2
4226G	2	3/8"ø x 4" LAG SCREW
9852A	1	6'3 STRUT
3177B	1	ET-REFLECTOR REFLECTIVE SHEETING

REV.	CHK'D	BY	DATE	REMARKS

SYRO ET — 2000

ET-2000 8 TUBE - ALASKA 12'-6" PANEL
PLAN, ELEVATION & SECTIONS

CUSTOMER | P.O. No.

DRAWN C.C./ DJB
CHECKED B.T./ D.D.
APPROVED
DATE 8-24-89
ENG. FILE # SS270
SHEET No. ET OF 1
DRAWING No. SS 270 REV. 0

TRINITY INDUSTRIES, INC.
DALLAS, TX CENTERVILLE, UT
GRAND, OH LIMA, OH
FORT WORTH, TX ELIZABETHTOWN, KY
SYRO

NOTE:
INSTALL RAIL PARALLEL TO ROADWAY EDGE LINE. WHEN TAPER IS REQUIRED BY DESIGN ENGINEER, A 50:1 TAPER OVER THE LENGTH OF SYSTEM IS ALLOWABLE.

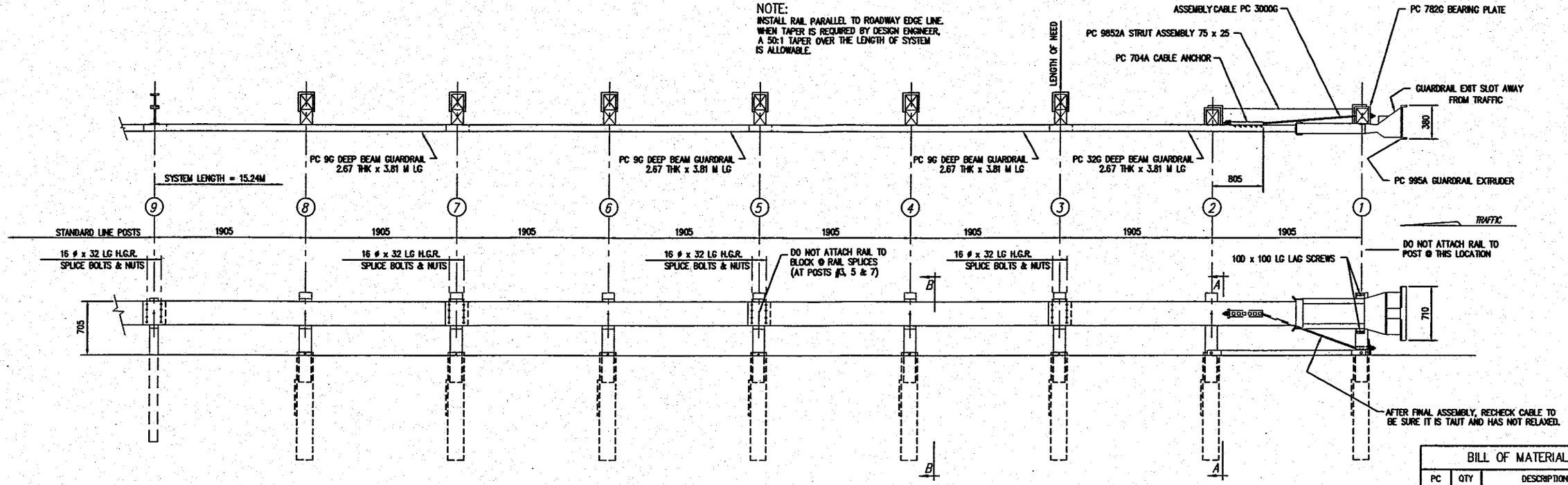

BILL OF MATERIAL		
PC	QTY	DESCRIPTION
9G	3	3/3810/1905/S (GUARDRAIL)
32G	1	3/3810/1905/S ANC(GUARDRAIL)
704A	1	CABLE ANCHOR BRACKET
705G	1	50 x 140 PIPE
740G	8	1370 TUBE SLEEVE
769G	8	6 x 455 x 610 SOIL PLATE
782G	1	16 x 200 x 200 BEARING PLATE
995A	1	ET-2000 EXTRUDER
3000G	1	CABLE 19 x 1980
3300G	11	16 WASHER
3340G	63	16 HEX NUT
3360G	32	16 ø x 32 SPLICE BOLT
3478G	16	16 ø x 190 HEX HD BOLT
3497G	8	16 ø x 240 HEX HD BOLT
3500G	1	16 ø x 255 POST BOLT
3580G	6	16 ø x 455 POST BOLT
3900G	2	25 WASHER
3910G	2	25 HEX NUT
4075B	6	WD BLOCK 356 x 150 x 200 DR
4147B	8	WD 1145 POST 140 x 190
4228G	2	10 ø x 100 LAG SCREW
9852A	1	STRUT ASSEMBLY

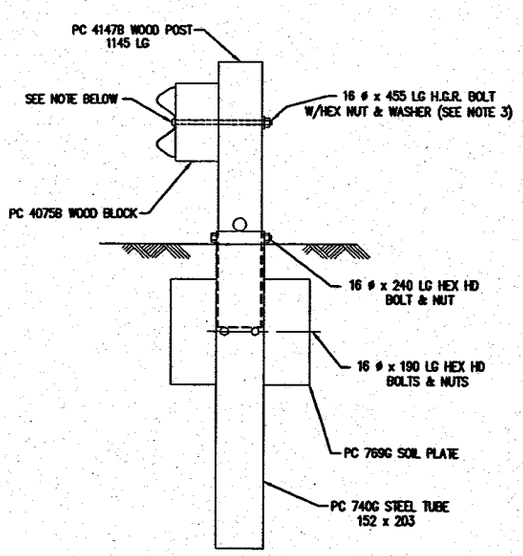

NOTE:
SECTION "B-B" IS SIMILAR @ POSTS #3, 5 & 7 EXCEPT RAIL IS NOT ATTACHED.

SECTION "B-B"
(TYP @ POSTS #4, 6 & 8)

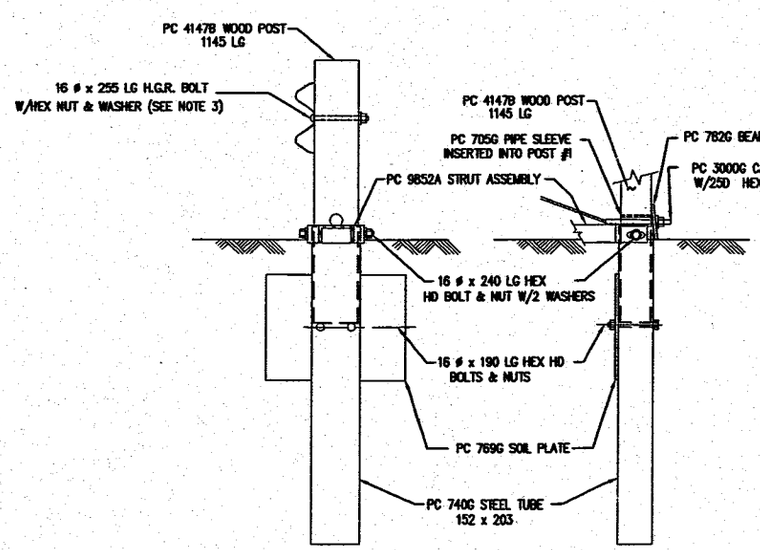

SECTION "A-A"
(@ POST #2)

PARTIAL VIEW @ POST #1
DO NOT ATTACH GUARDRAIL TO POST

METRIC MEASUREMENTS NOTE:

1. ALL DIMENSION SHOWN ARE IN mm UNLESS NOTED
2. ALL HARDWARE, WOOD PRODUCTS AND OTHER FABRICATED MATERIAL USED IN THIS SYSTEM WILL BE CONVERTED TO NEAREST AVAILABLE ENGLISH MEASUREMENTS.

METRIC

NOTES:

1.) DO NOT ATTACH GUARDRAIL TO POST # 1.

2.) DO NOT ATTACH GUARDRAIL TO POST BLOCKS AT GUARDRAIL LAP SPLICES. (AT POSTS #3,5 & 7)

3.) THE 160 FLAT WASHER IS USED UNDER THE NUT, BEHIND THE POST ONLY. NO WASHER IS USED AT THE RAIL.

4.) MANUFACTURER SUGGESTS CUSTOMER TO PROVIDE REFLECTORIZATION OF TERMINAL.

This drawing and the information shown thereon is the sole property of TRINITY INDUSTRIES, INC. Neither the drawing nor such information is to be used for any purpose other than that for which it was specifically furnished by TRINITY INDUSTRIES, INC., nor is any reproduction authorized without written permission.

REV.	CHK'D	BY	DATE	REMARKS

ET-2000 PLUS

ET-2000 PLUS 15.24M WITH 3.81M RAILS & 8 POST SLEEVES
PLAN, ELEVATION & SECTION

TRINITY INDUSTRIES, INC.
HIGHWAY SAFETY PRODUCTS
2525 STEMMONS FREEWAY, DALLAS, TX 75207

DRAWN	BT
CHECKED	
SCALE	N.T.S.
DATE	7-18-00
ENG. FILE #	SS154-01M
SHEET No.	E1 OF 1
DRAWING NO.	SS-154
REV.	0

NOTE:
INSTALL RAIL PARALLEL TO ROADWAY EDGE LINE. WHEN TAPER IS REQUIRED BY DESIGN ENGINEER, A 50:1 TAPER OVER THE LENGTH OF SYSTEM IS ALLOWABLE.

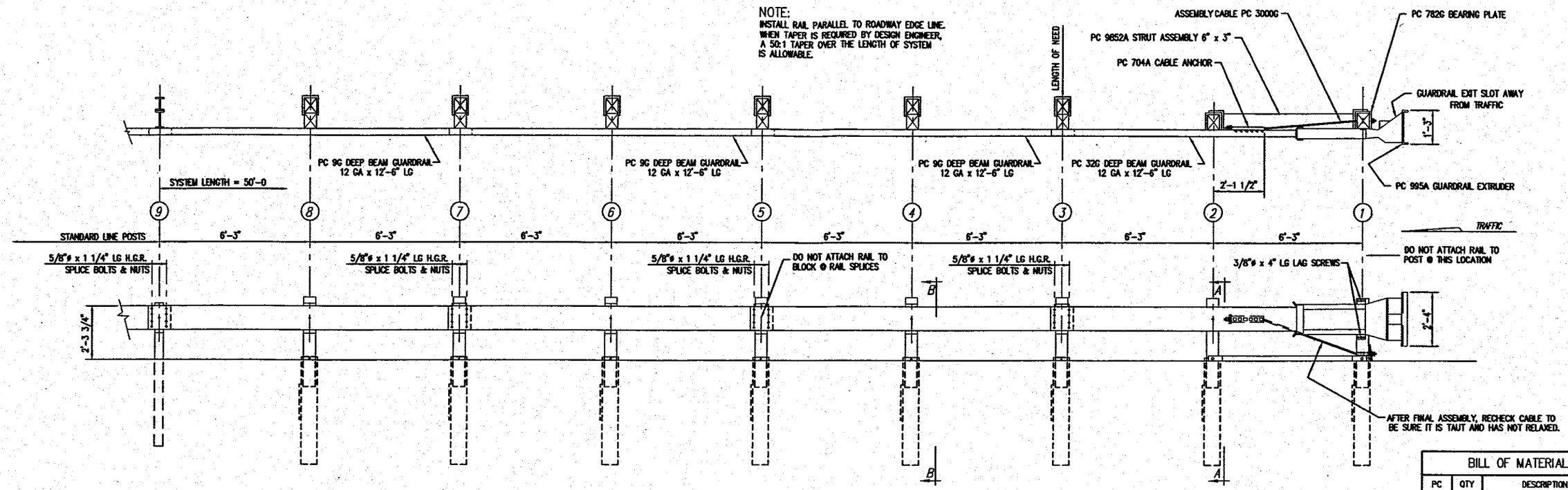

BILL OF MATERIAL		
PC	QTY	DESCRIPTION
9G	3	12/12'6/6'3/S (GUARDRAIL)
32G	1	12/12'6/6'3/S ANC (GUARDRAIL)
704A	1	CABLE ANCHOR BRACKET
705G	1	2" x 5 1/2" PIPE
740G	8	4'-6" TUBE SLEEVE
769G	8	1/4" x 18" x 24" SOIL PLATE
782G	1	5/8" x 8" x 8" BEARING PLATE
995A	1	ET-2000 EXTRUDER
3000G	1	CABLE 3/4 x 6'6
3300G	11	5/8" WASHER
3340G	63	5/8" HEX NUT
3360G	32	5/8"ø x 1 1/4" SPLICE BOLT
3478G	16	5/8"ø x 7 1/2" HEX HD BOLT
3497G	8	5/8"ø x 9 1/2" HEX HD BOLT
3500G	1	5/8"ø x 10" POST BOLT
3580G	6	5/8"ø x 18" POST BOLT
3900G	2	1" WASHER
3910G	2	1" HEX NUT
4075B	6	WD BLOCK 1'2 x 6 x 8 DR
4147B	8	WD 3'9 POST 5 1/2 x 7 1/2
4228G	2	3/8"ø x 4" LAG SCREW
9852A	1	STRUT ASSEMBLY

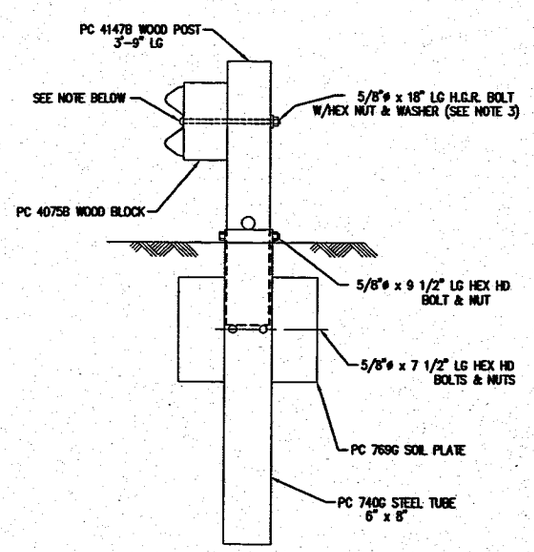

NOTE:
SECTION "B-B" IS SIMILAR @ POSTS #3, 5 & 7 EXCEPT RAIL IS NOT ATTACHED.

SECTION "B-B"
(TYP @ POSTS #4, 6 & 8)

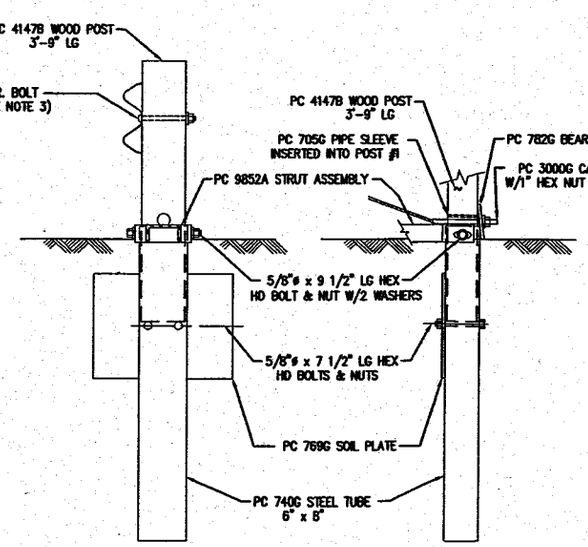

SECTION "A-A"
(@ POST #2)

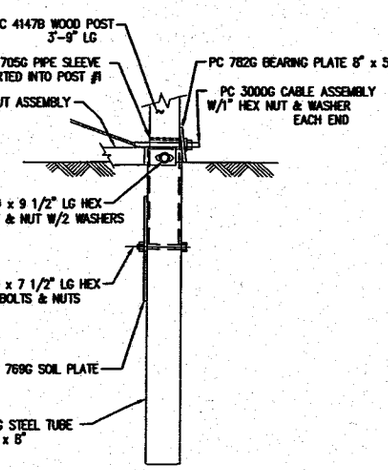

PARTIAL VIEW @ POST #1
DO NOT ATTACH GUARDRAIL TO POST

NOTES:
1.) DO NOT ATTACH GUARDRAIL TO POST # 1.
2.) DO NOT ATTACH GUARDRAIL TO POST BLOCKS AT GUARDRAIL LAP SPLICES.
3.) THE 5/8" FLAT WASHER IS USED UNDER THE NUT, BEHIND THE POST ONLY. NO WASHER IS USED AT THE RAIL.
4.) MANUFACTURER SUGGESTS CUSTOMER TO PROVIDE REFLECTORIZATION OF TERMINAL.

This drawing and the information shown thereon is the sole property of TRINITY INDUSTRIES, INC. Neither the drawing nor such information is to be used for any purpose other than that for which it was specifically furnished by TRINITY INDUSTRIES, INC., nor is any reproduction authorized without written permission.

REV.	CHK'D	BY	DATE	REMARKS

ET-2000 PLUS

ET-2000 PLUS 50' WITH 12'-6' RAILS & 8 POST SLEEVES
PLAN, ELEVATION & SECTION

TRINITY INDUSTRIES, INC.
HIGHWAY SAFETY PRODUCTS
2525 STEMMONS FREEWAY, DALLAS, TX 75207

DRAWN	BT
CHECKED	
SCALE	N.T.S.
DATE	5-18-00
CAD FILE #	SS154-01E
SHEET	E1 OF 1
DRAWING NO.	SS-154
REV.	0

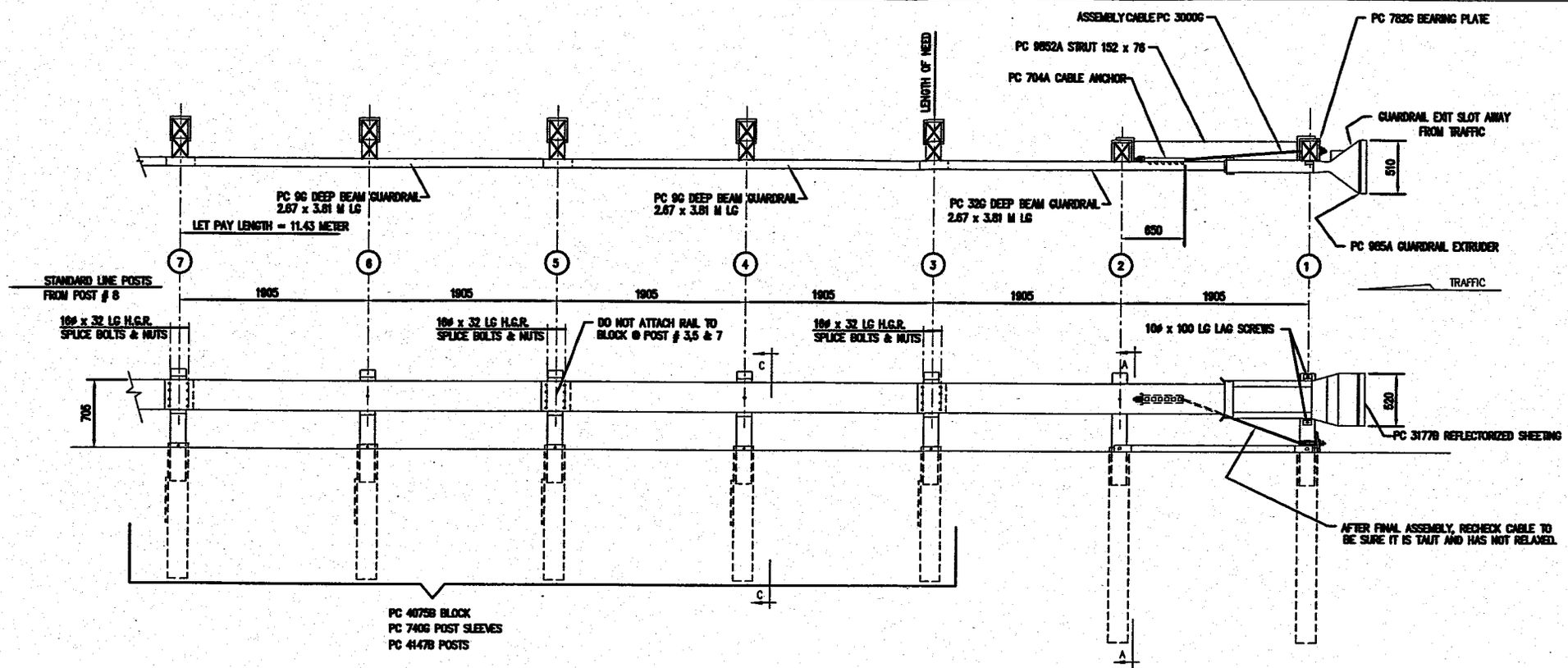

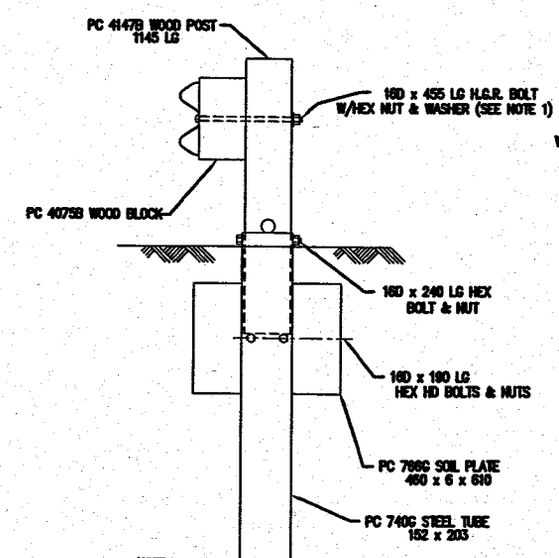

NOTE:
SECTION "C-C" IS SIMILAR @ POST #3,5 & 7 EXCEPT RAIL IS NOT ATTACHED.

SECTION "C-C"
(TYP @ POSTS #4, & #6)

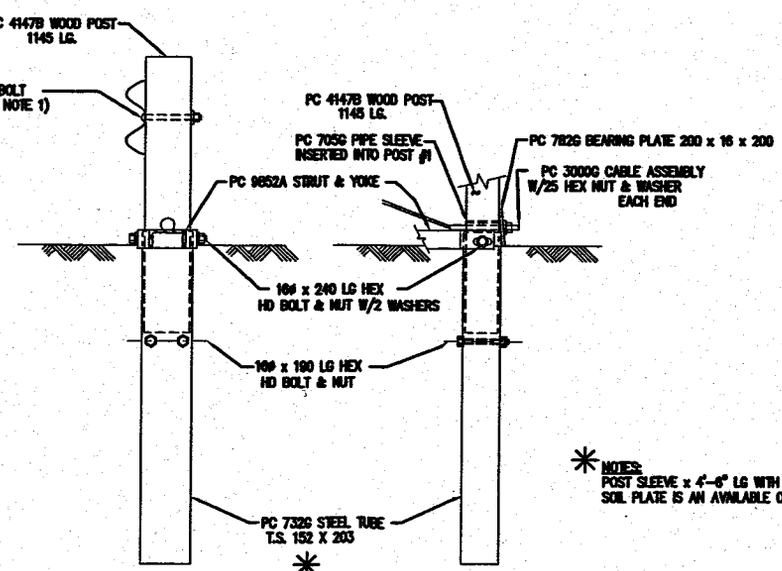

SECTION "A-A"
(@ POST #2)

PARTIAL VIEW @ POST #1

NOTES:
1.) THE 16 FLAT WASHER IS USED UNDER THE NUT, BEHIND THE POST ONLY. NO WASHER IS USED AT THE RAIL.
2.) ALL DIM. SHOWN ARE IN MM UNLESS NOTED

* NOTES:
POST SLEEVE x 4'-6" LG WITH 16" x 1/4" x 24" SOIL PLATE IS AN AVAILABLE OPTION FOR POSTS #1 & #2.

BILL OF MATERIAL

PC	QTY	DESCRIPTION
9G	2	12/12.5'/6'3"/S (GUARDRAIL)
32G	1	12/12.5'/6'3/S ANC (GUARDRAIL)
704A	1	CABLE ANCHOR BRACKET
705G	1	2" x 5 1/2" PIPE
732G	2	6'8 TUBE SLEEVE
740G	5	4'8 TUBE SLEEVE
788G	5	1/4" x 18" x 24" SOIL PLATE
782G	1	5/8" x 8" x 8" BEARING PLATE
985A	1	ET-2000 EXTRUDER
3000G	1	CABLE 3/4 x 6'8
3300G	20	5/8" WASHER
3340G	51	5/8" HEX NUT
3380G	24	5/8"ø x 1 1/4" SPLICE BOLT
3478G	14	5/8"ø x 7 1/2" HEX HD BOLT
3487G	7	5/8"ø x 9 1/2" HEX HD BOLT
3500G	1	5/8"ø x 16" POST BOLT
3560G	5	5/8"ø x 18" POST BOLT
3600G	2	1" WASHER
3610G	2	1" HEX NUT
4075B	5	WD BLOCK 1'2 x 6 x 8 DR
4147B	7	WD 3'9 POST 5 1/2 x 7 1/2
4228G	2	3/8"ø x 4" LAG SCREW
9652A	1	STRUT & YOKE
3177B	1	ET-DELINEATOR REFLECTIVE SHEETING

REV.	CHK'D	BY	DATE	REMARKS

ET2000-LET

ET2000 11.43 METER LET - 7 TUBES ALASKA
3.81 PANELS, PLAN, ELEVATION & SECTIONS

CUSTOMER | P.O. No.

DRAWN C.C.
CHECKED D.D.
APPROVED
DATE 08/28/00
ENG. FILE # SS271M
SHT.No. E1 OF 1
DRAWING No. SS 271M REV. 0

TRINITY INDUSTRIES, INC.
DALLAS, TX CENTERVILLE, UT GRAND, OH LIMA, OH FORT WORTH, TX ELIZABETHTOWN, KY

This drawing and the information shown thereon is the sole property of TRINITY INDUSTRIES, INC. Neither the drawing nor such information is to be used for any purpose other than that for which it was specifically furnished by TRINITY INDUSTRIES, INC., nor is any reproduction authorized without written permission.

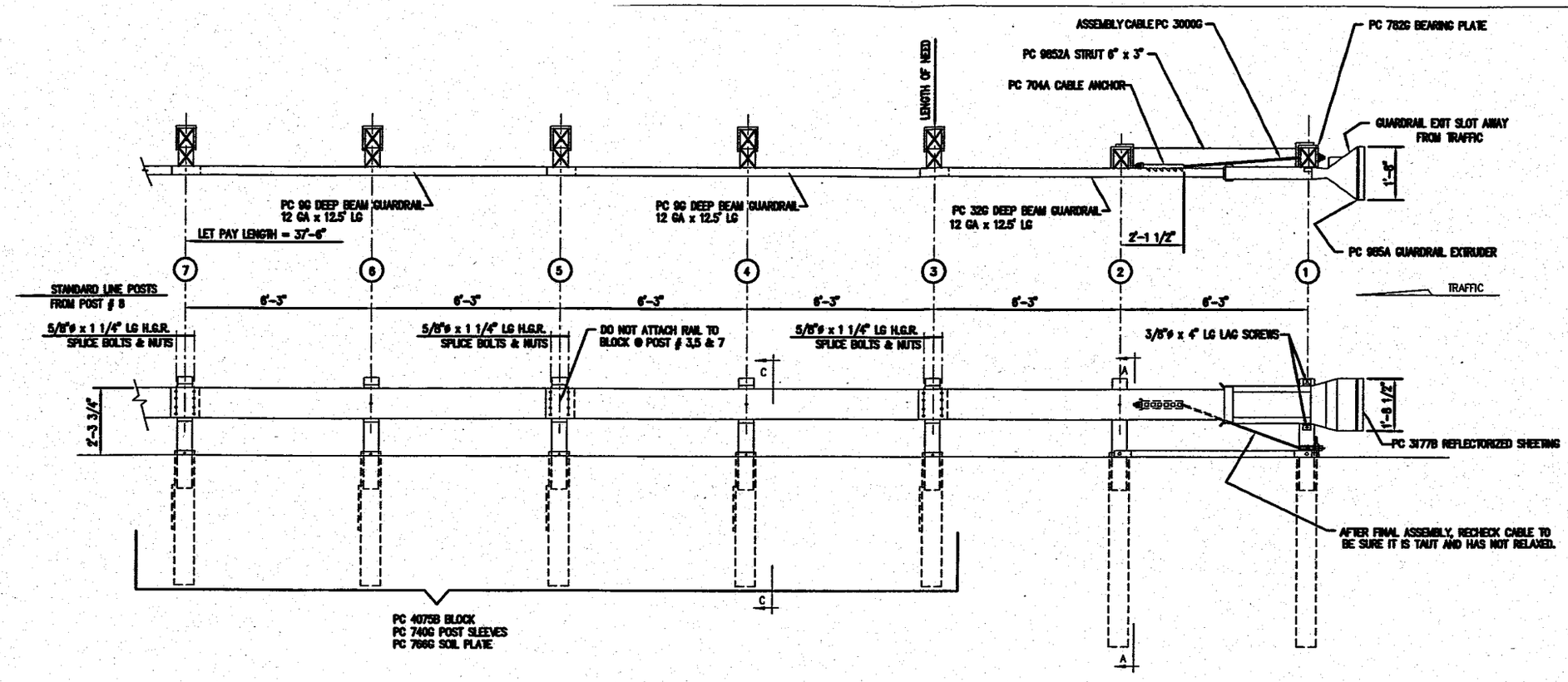

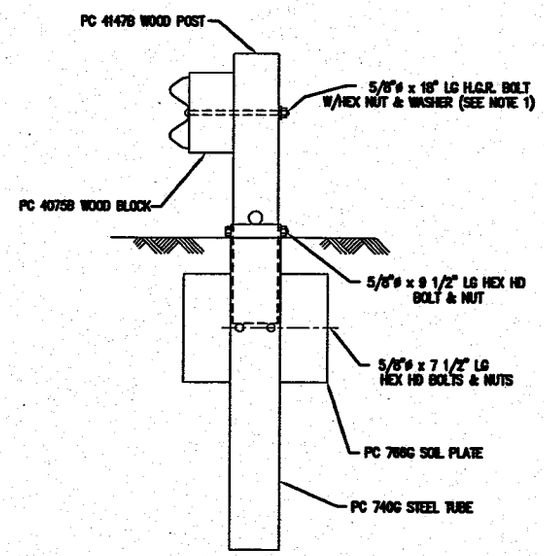

NOTE:
SECTION "C-C" IS SIMILAR @ POST #3,5 & 7 EXCEPT RAIL IS NOT ATTACHED.

SECTION "C-C"
(TYP @ POSTS #4, & #6)

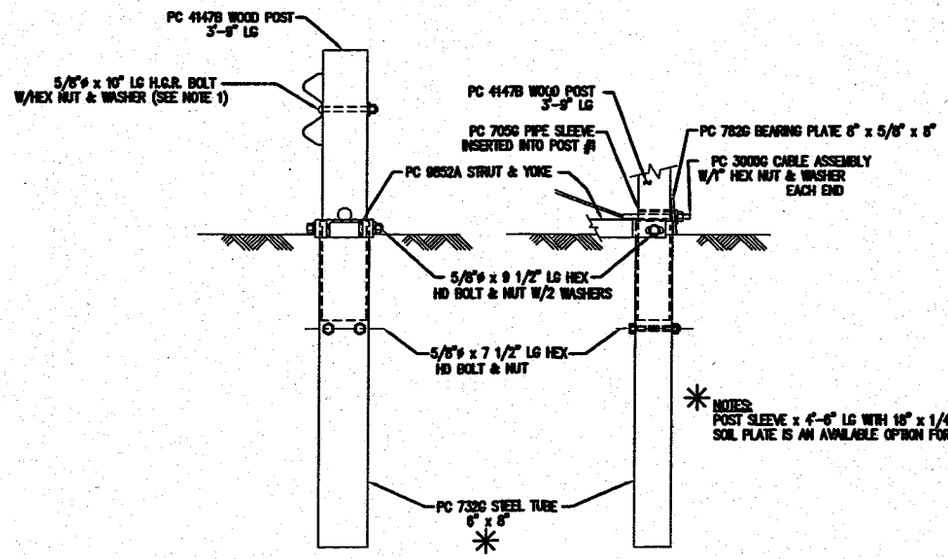

SECTION "A-A"
(@ POST #2)

PARTIAL VIEW @ POST #1

NOTES:
POST SLEEVE x 4'-6" LG WITH 18" x 1/4" x 24" SOIL PLATE IS AN AVAILABLE OPTION FOR POSTS #1 & #2.

NOTES:
1.) THE 5/8" FLAT WASHER IS USED UNDER THE NUT, BEHIND THE POST ONLY. NO WASHER IS USED AT THE RAIL.

BILL OF MATERIAL

PC	QTY	DESCRIPTION
9G	2	12/12.5'/6'3"/S (GUARDRAIL)
32G	1	12/12.5'/6'3/S ANC (GUARDRAIL)
704A	1	CABLE ANCHOR BRACKET
705G	1	2" x 5 1/2" PIPE
732G	2	6"ø TUBE SLEEVE
740G	5	4"ø TUBE SLEEVE
766G	5	1/4" x 18" x 24" SOIL PLATE
782G	1	5/8" x 8" x 8" BEARING PLATE
985A	1	ET-2000 EXTRUDER
3000G	1	CABLE 3/4 x 6'6
3300G	20	5/8" WASHER
3340G	51	5/8" HEX NUT
3398G	24	5/8"ø x 1 1/4" SPLICE BOLT
3478G	14	5/8"ø x 7 1/2" HEX HD BOLT
3497G	7	5/8"ø x 9 1/2" HEX HD BOLT
3500G	1	5/8"ø x 10" POST BOLT
3598G	5	5/8"ø x 18" POST BOLT
3600G	2	1" WASHER
3610G	2	1" HEX NUT
4075B	5	WD BLOCK 1"2 x 6 x 8 DR
4147B	7	WD 3"ø POST 5 1/2 x 7 1/2
4229G	2	3/8"ø x 4" LAG SCREW
9852A	1	STRUT & YOKE
3177B	1	ET-DELINEATOR REFLECTIVE SHEETING

REV.	CHK'D	BY	DATE	REMARKS

SYRO

ET2000-LET

ET2000 37'-6" LET-7 TUBES ALASKA
12'-6" PANEL, PLAN, ELEVATION & SECTIONS

CUSTOMER | P.O. No.

DRAWN C.C.
CHECKED D.D.
APPROVED
DATE 08/24/99
ENG. FILE # SS271
SHT.No. E1 OF 1
DRAWING No. SS 271 REV. 0

TRINITY INDUSTRIES, INC. SYRO
DALLAS, TX CHARLOTTE, NC LINDEN, NJ FORT WORTH, TX HUNTINGTON, IN

This drawing and the information shown thereon is the sole property of TRINITY INDUSTRIES, INC. Neither the drawing nor such information is to be used for any purpose other than that for which it was specifically furnished by TRINITY INDUSTRIES, INC., nor is any reproduction authorized without written permission.

NOTE:
INSTALL RAIL PARALLEL TO ROADWAY EDGE LINE.
WHEN TAPER IS REQUIRED BY DESIGN ENGINEER,
A 37.5 TO 1 TAPER OVER THE LENGTH OF SYSTEM
IS ALLOWABLE.

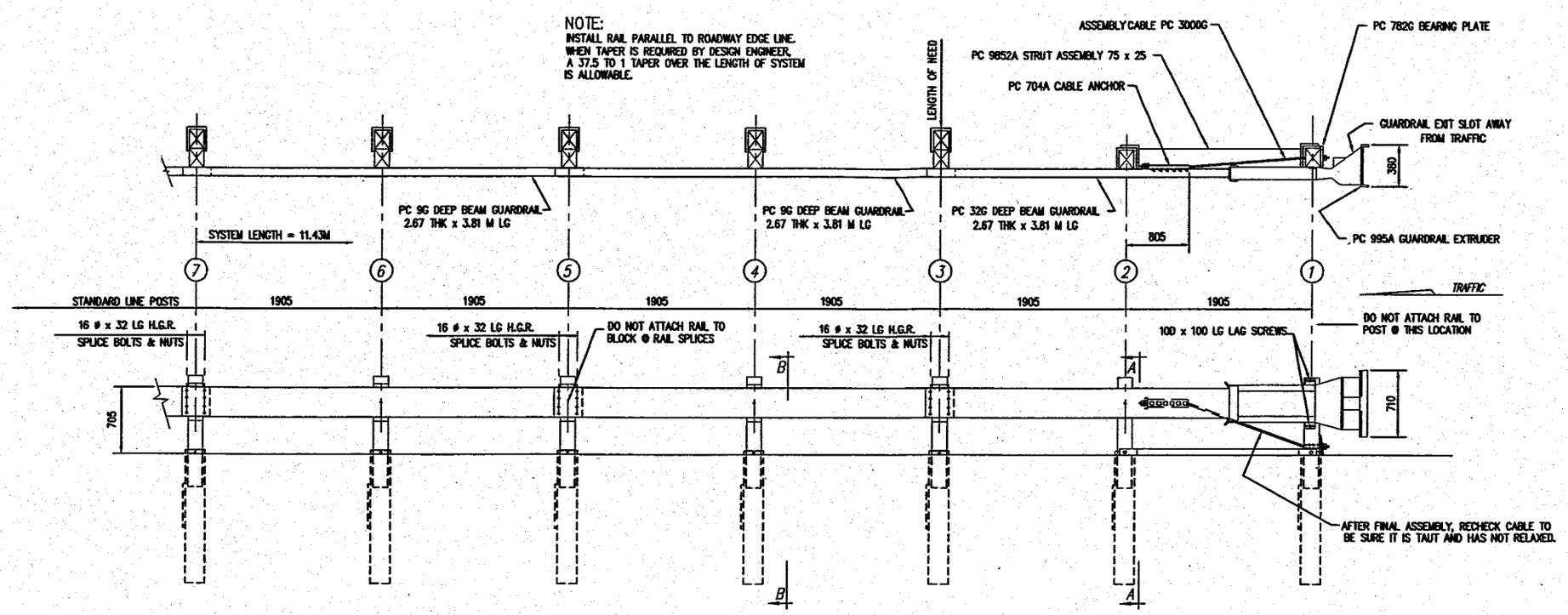

BILL OF MATERIAL

PC	QTY	DESCRIPTION
9G	2	3/3810/1905/S (GUARDRAIL)
32G	1	3/3810/1905/S ANC(GUARDRAIL)
704A	1	CABLE ANCHOR BRACKET
705G	1	50 x 140 PIPE
740G	7	1370 TUBE SLEEVE
769G	7	6 x 455 x 610 SOIL PLATE
782G	1	16 x 200 x 200 BEARING PLATE
995A	1	ET-2000 EXTRUDER
3000G	1	CABLE 19 x 1980
3300G	10	16 WASHER
3340G	51	16 HEX NUT
3360G	24	16 ø x 32 SPLICE BOLT
3478G	14	16 ø x 190 HEX HD BOLT
3497G	7	16 ø x 240 HEX HD BOLT
3500G	1	16 ø x 255 POST BOLT
3580G	5	16 ø x 455 POST BOLT
3900G	2	25 WASHER
3910G	2	25 HEX NUT
4075B	5	WD BLOCK 356 x 150 x 200 DR
4147B	7	WD 1145 POST 140 x 190
4228G	2	10 ø x 100 LAG SCREW
9852A	1	STRUT ASSEMBLY

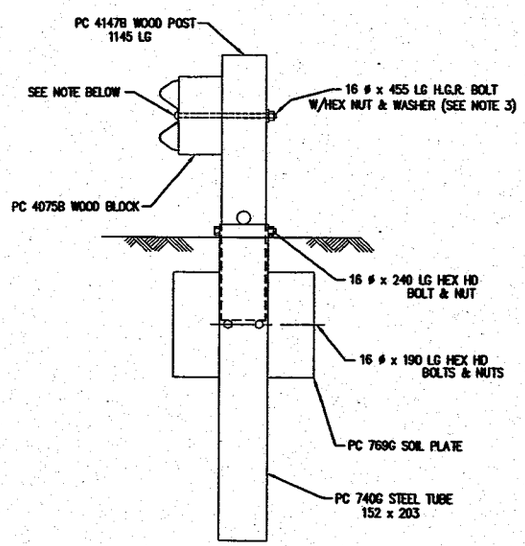

NOTE:
SECTION "B-B" IS SIMILAR @ POST #3, 5 & 7
EXCEPT RAIL IS NOT ATTACHED.

SECTION "B-B"
(TYP @ POSTS #4 & 6)

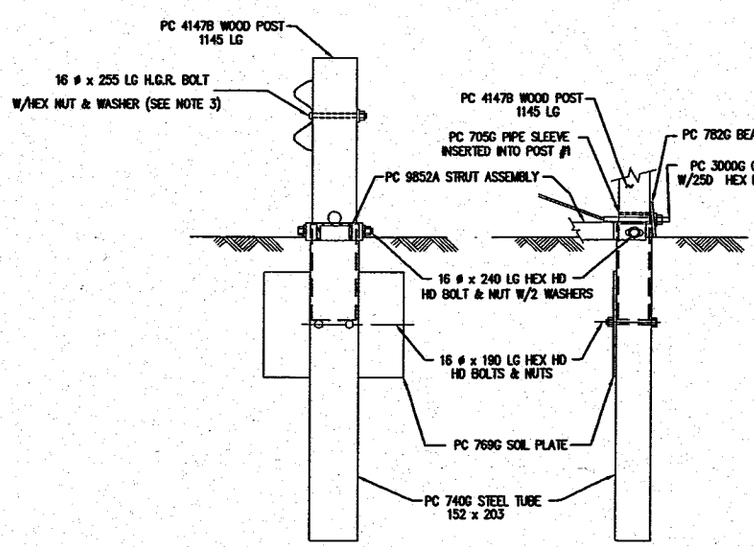

SECTION "A-A"
(@ POST #2)

PARTIAL VIEW @ POST #1
DO NOT ATTACH GUARDRAIL TO POST

METRIC MEASUREMENTS NOTE:

1. ALL DIMENSION SHOWN ARE IN mm UNLESS NOTED
2. ALL HARDWARE, WOOD PRODUCTS AND OTHER FABRICATED MATERIAL USED IN THIS SYSTEM WILL BE CONVERTED TO NEAREST AVAILABLE ENGLISH MEASUREMENTS.

METRIC

NOTES:

1.) DO NOT ATTACH GUARDRAIL TO POST # 1.

2.) DO NOT ATTACH GUARDRAIL TO POST BLOCKS AT GUARDRAIL LAP SPLICES.

3.) THE 16D FLAT WASHER IS USED UNDER THE NUT, BEHIND THE POST ONLY. NO WASHER IS USED AT THE RAIL.

4.) MANUFACTURER SUGGESTS CUSTOMER TO PROVIDE REFLECTORIZATION OF TERMINAL.

This drawing and the information shown thereon is the sole property of TRINITY INDUSTRIES, INC. Neither the drawing nor such information is to be used for any purpose other than that for which it was specifically furnished by TRINITY INDUSTRIES, INC., nor is any reproduction authorized without written permission.

REV.	CHK'D	BY	DATE	REMARKS

ET-2000 PLUS

ET-2000 PLUS 11.43M WITH 3.81M RAILS
& 7 POST SLEEVES
PLAN, ELEVATION & SECTION

TRINITY INDUSTRIES, INC.
HIGHWAY SAFETY PRODUCTS
2525 STEMMONS FREEWAY, DALLAS, TX 75207

DRAWN	BT
CHECKED	
SCALE	N.T.S.
DATE	7-18-00
ENG. FILE #	SS155-01M
SHEET	E1 OF 1
DRAWING NO.	SS-155
REV.	0

NOTE:
INSTALL RAIL PARALLEL TO ROADWAY EDGE LINE.
WHEN TAPER IS REQUIRED BY DESIGN ENGINEER,
A 37.5 TO 1 TAPER OVER THE LENGTH OF SYSTEM
IS ALLOWABLE.

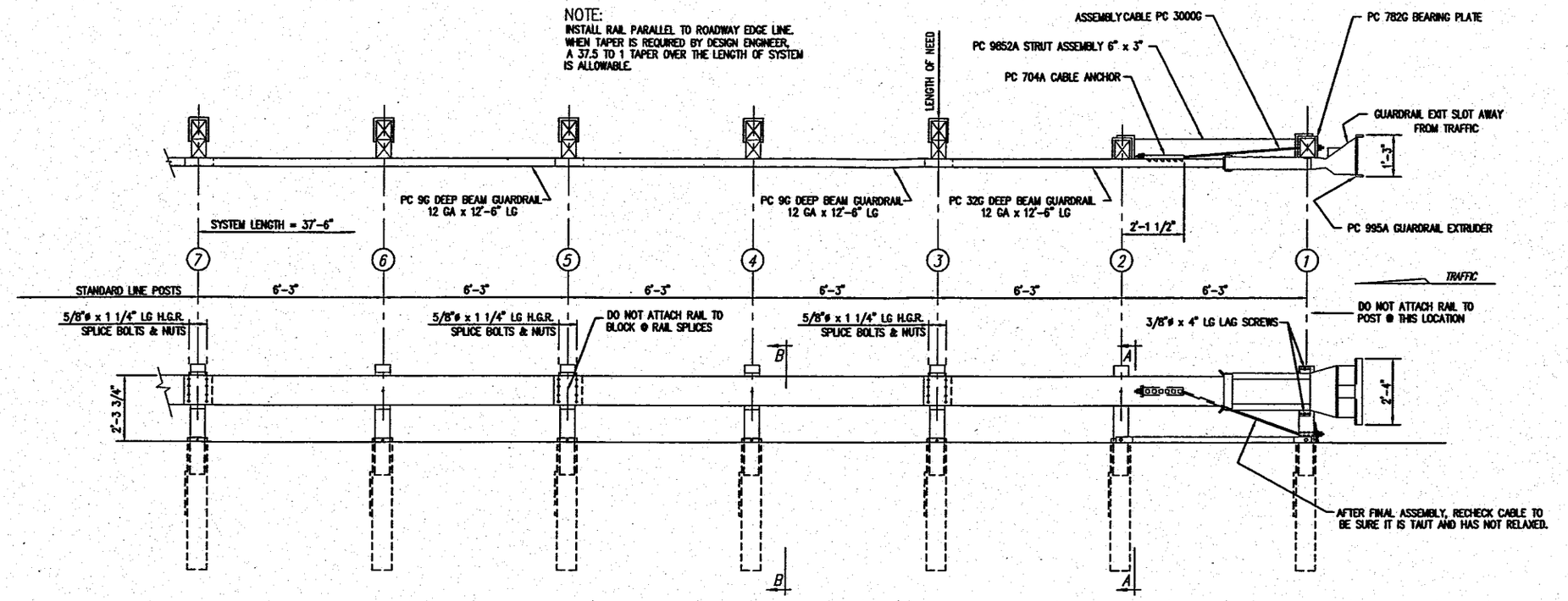

BILL OF MATERIAL

PC	QTY	DESCRIPTION
9G	2	12/12'6/6'3/S (GUARDRAIL)
32G	1	12/12'6/6'3/S ANC (GUARDRAIL)
704A	1	CABLE ANCHOR BRACKET
705G	1	2" x 5 1/2" PIPE
740G	7	4'-6" TUBE SLEEVE
769G	7	1/4" x 18" x 24" SOIL PLATE
782G	1	5/8" x 8" x 8" BEARING PLATE
995A	1	ET-2000 EXTRUDER
3000G	1	CABLE 3/4 x 6'6
3300G	10	5/8" WASHER
3340G	51	5/8" HEX NUT
3360G	24	5/8"ø x 1 1/4" SPLICE BOLT
3478G	14	5/8"ø x 7 1/2" HEX HD BOLT
3497G	7	5/8"ø x 9 1/2" HEX HD BOLT
3500G	1	5/8"ø x 10" POST BOLT
3580G	5	5/8"ø x 18" POST BOLT
3900G	2	1" WASHER
3910G	2	1" HEX NUT
4075B	5	WD BLOCK 1'2 x 6 x 8 DR
4147B	7	WD 3'9 POST 5 1/2 x 7 1/2
4228G	2	3/8"ø x 4" LAG SCREW
9852A	1	STRUT ASSEMBLY

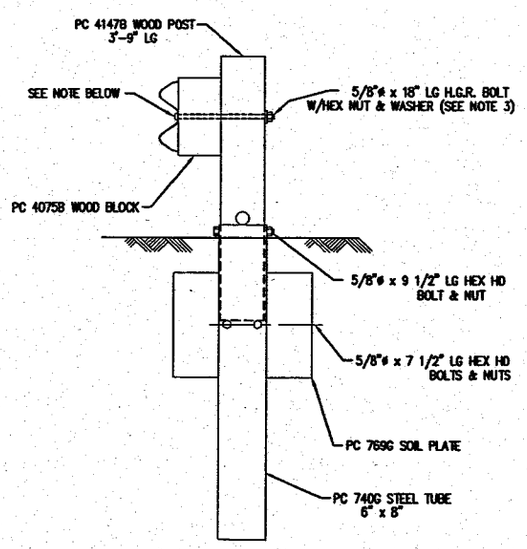

NOTE:
SECTION "B-B" IS SIMILAR @ POST #3, 5 & 7
EXCEPT RAIL IS NOT ATTACHED.

SECTION "B-B"
(TYP @ POSTS #4 & 6)

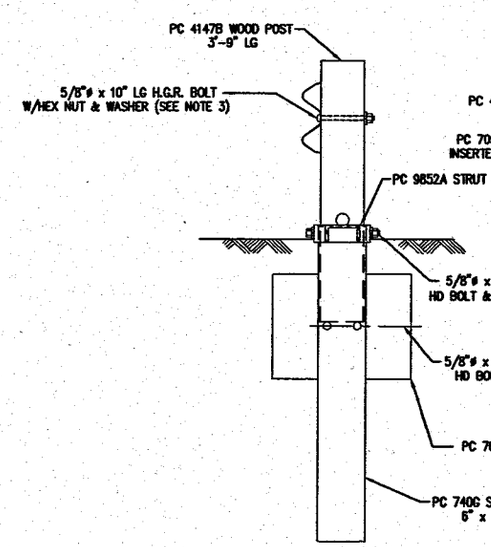

SECTION "A-A"
(@ POST #2)

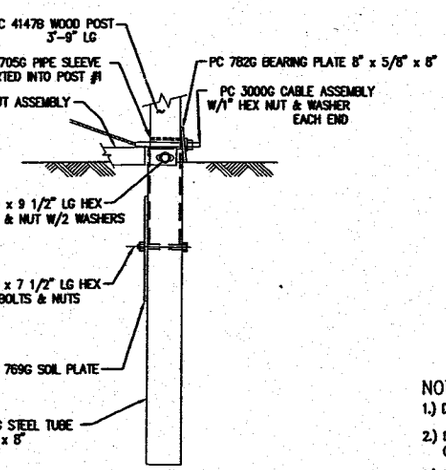

PARTIAL VIEW @ POST #1
DO NOT ATTACH GUARDRAIL TO POST

NOTES:

1.) DO NOT ATTACH GUARDRAIL TO POST # 1.

2.) DO NOT ATTACH GUARDRAIL TO POST BLOCKS AT GUARDRAIL LAP SPLICES.

3.) THE 5/8" FLAT WASHER IS USED UNDER THE NUT, BEHIND THE POST ONLY. NO WASHER IS USED AT THE RAIL.

4.) MANUFACTURER SUGGESTS CUSTOMER TO PROVIDE REFLECTORIZATION OF TERMINAL.

This drawing and the information shown thereon is the sole property of TRINITY INDUSTRIES, INC. Neither the drawing nor such information is to be used for any purpose other than that for which it was specifically furnished by TRINITY INDUSTRIES, INC., nor is any reproduction authorized without written permission.

REV.	CHK'D	BY	DATE	REMARKS

ET-2000 PLUS

ET-2000 PLUS 37'-6 WITH 12'-6' RAILS
& 7 POST SLEEVES
PLAN, ELEVATION & SECTION

TRINITY INDUSTRIES, INC.
HIGHWAY SAFETY PRODUCTS
2525 STEMMONS FREEWAY, DALLAS, TX 75207

DRAWN	BT
CHECKED	
SCALE	N.T.S.
DATE	5-18-00
ENG. FILE #	SS155-01E
SHEET	E1 OF 1
DRAWING NO.	SS-155
REV.	0

POST OFFSET DIMENSION TABLE			
POST No	* SYSTEM END OFFSET		
	915mm	1070mm	1220mm
1	915	1070	1220
2	585	705	850
3	300	420	540
4	170	270	375
5	75	150	240
6	20	70	135
7	0	20	60
8	0	0	15
9	0	0	0

OFFSET NOTE:

THE POST OFFSET DIMENSIONS ARE GIVEN TO THE CENTER OF THE TRAFFIC FACE OF THE BLOCKOUTS, EXCEPT AT THE FIRST TWO POSTS, WHERE THE DIMENSION IS TO THE CENTER OF THE TRAFFIC FACE OF THE POST. OFFSET POINTS ARE TO BE LOCATED BY CHORD MEASUREMENTS AT THE BACK OF THE RAIL EQUAL TO THE NOMINAL POST SPACINGS SHOWN. POSTS ARE TO BE SET APPROXIMATELY RADIAL TO THE RAILING AT EACH POST LOCATION.

* REFER TO STATE DEPARTMENT OF TRANSPORTATION SPECIFICATIONS, STANDARD DRAWINGS AND/OR PROPOSAL DOCUMENTS FOR ALLOWABLE SYSTEM END OFFSET.

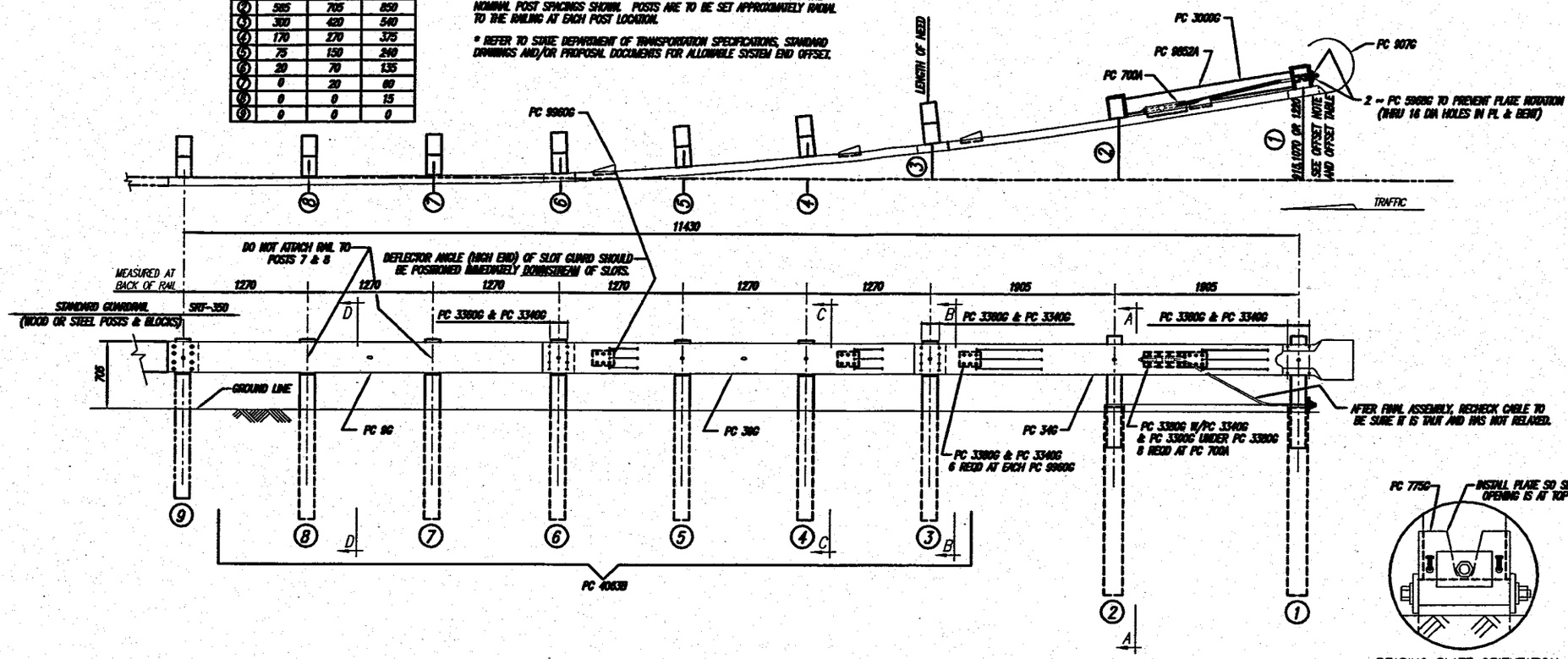

BILL OF MATERIAL		
PC	QTY	DESCRIPTION
9G	1	12/12'6/6'3/S (GUARDRAIL)
34G	1	12/12'6/6'3/S SRT-1 (GUARDRAIL)
39G	1	12/12'6/S SRT-2 (GUARDRAIL)
700A	1	CABLE ANCHOR BRACKET
705G	1	2"ø x 5 1/2" PIPE
742G	2	6'D TUBE SLEEVE
775G	1	5/8 x 6 x 8 BEARING PLATE
907G	1	12/BUFFER/ROLLED (TERMINAL)
3000G	1	3/4 x 6'6 CABLE
3300G	20	5/8" WASHER
3340G	62	5/8" HEX NUT
3360G	44	5/8"ø x 1 1/4" SPLICE BOLT
3380G	8	5/8"ø x 1 1/2" HEX HD BOLT
3497G	2	5/8"ø x 9 1/2" HEX HD BOLT
3500G	2	5/8"ø x 10" POST BOLT
3580G	6	5/8"ø x 18" POST BOLT
3900G	1	1" WASHER
3910G	2	1" HEX NUT
4063B	6	6'D POST 6 x 8
4075B	6	14" BLOCK 6 x 8
6058B	2	3' 9 POST 5 1/2 x 7 1/2
5968G	2	16d NAIL SRT
9852A	1	STRUT ASSEMBLY
9960G	4	SLOT GUARD
9961G	1	3/8 x 3 x 4 PLATE WASHER

BEARING PLATE ORIENTATION

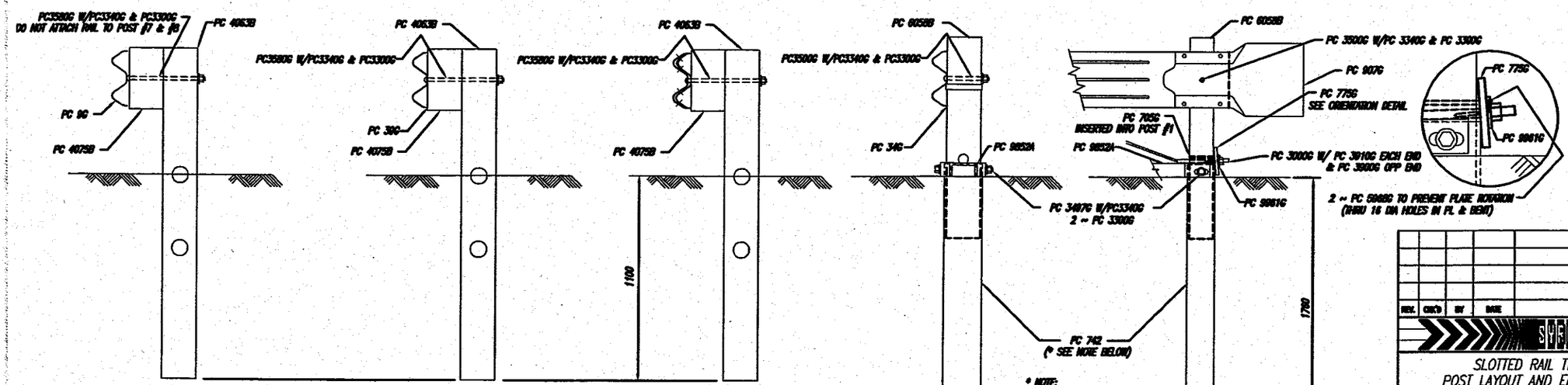

SECTION "D-D" (@ POST #7 & #8)

SECTION "C-C" (@ POSTS #4, & #5)

SECTION "B-B" (@ POSTS #3 & #6)

SECTION "A-A" (@ POST #2)

ENLARGED VIEW @ POST #1

* NOTE:
POST SLEEVE TUBE x 1370 LG WITH 455 x 6 x 610 SOIL PLATE IS AN AVAILABLE OPTION FOR POSTS #1 & #2.

This drawing and the information shown thereon is the sole property of TRINITY INDUSTRIES, INC. Neither the drawing nor such information is to be used for any purpose other than that for which it was specifically furnished by TRINITY INDUSTRIES, INC., nor is any reproduction authorized without written permission.

REV.	CHK'D	BY	DATE	REMARKS

SYRO SRT-350

SLOTTED RAIL TERMINAL
POST LAYOUT AND ERECTION DETAILS
SRT-350 (3.81, 8 POST)

CUSTOMER: P.O. No.

TRINITY INDUSTRIES, INC. SYRO
DALLAS, TX CENTERVILLE, UT GRAND, OH LIMA, OH FORT WORTH, TX ELIZABETHTOWN, KY

DRAWN	B. TANACH
CHECKED	
APPROVED	
DATE	7-12-00
ENG. FILE #	SS444M
SHEET No.	E1 OF 1
DRAWING No.	SS 444M
REV.	0

POST OFFSET DIMENSION TABLE			
POST No	* SYSTEM END OFFSET		
	3'-0"	3'-6"	4'-0"
(1)	36"	42"	48"
(2)	22 1/4"	27 3/4"	33 1/2"
(3)	11 3/4"	16 1/2"	21 1/4"
(4)	6 3/4"	10 5/8"	14 3/4"
(5)	3"	6"	9 1/2"
(6)	3/4"	2 3/4"	5 3/8"
(7)	0	3/4"	2 3/8"
(8)	0	0	5/8"
(9)	0	0	0

OFFSET NOTE:
THE POST OFFSET DIMENSIONS ARE GIVEN TO THE CENTER OF THE TRAFFIC FACE OF THE BLOCKOUTS, EXCEPT AT THE FIRST TWO POSTS, WHERE THE DIMENSION IS TO THE CENTER OF THE TRAFFIC FACE OF THE POST. OFFSET POINTS ARE TO BE LOCATED BY CHORD MEASUREMENTS AT THE BACK OF THE RAIL EQUAL TO THE NOMINAL POST SPACINGS SHOWN. POSTS ARE TO BE SET APPROXIMATELY NORMAL TO THE RAILING AT EACH POST LOCATION.

⚠ * REFER TO STATE DEPARTMENT OF TRANSPORTATION SPECIFICATIONS, STANDARD DRAWINGS AND/OR PROPOSAL DOCUMENTS FOR ALLOWABLE SYSTEM END OFFSET.

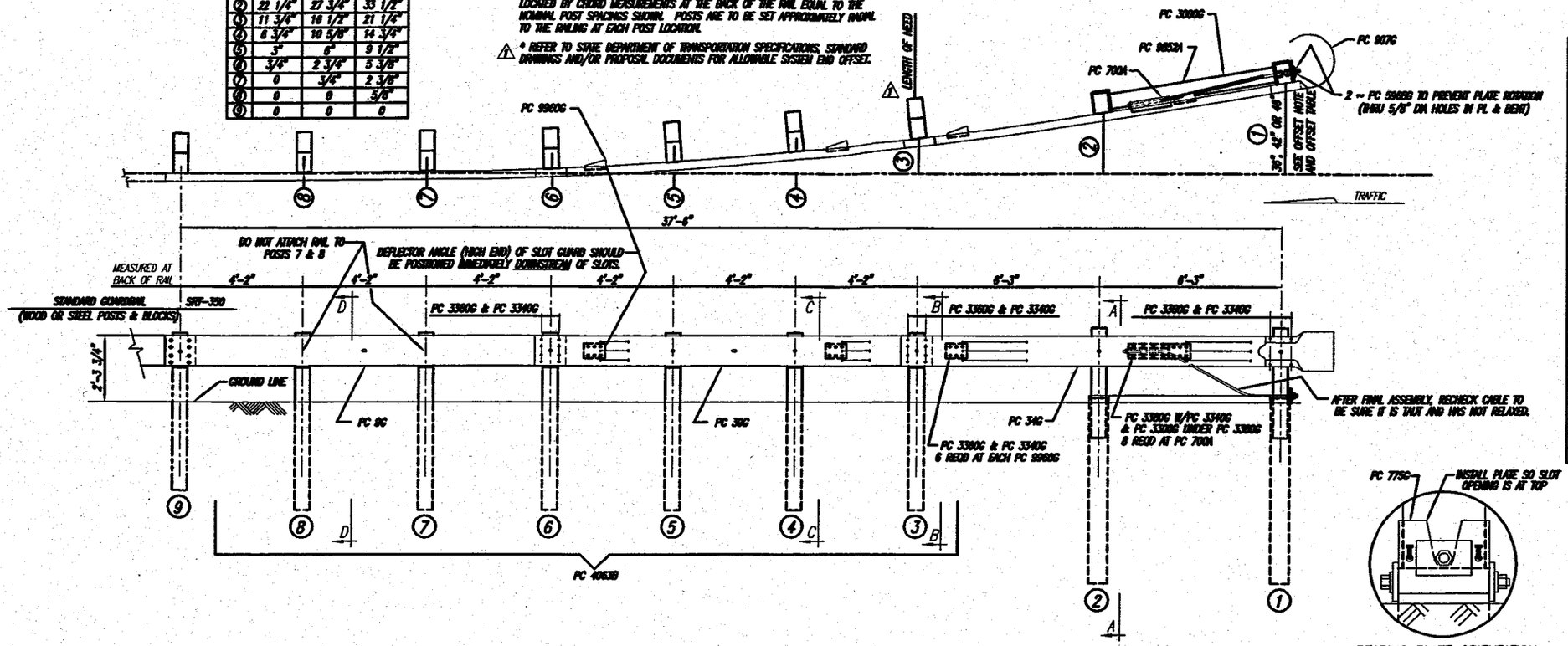

BILL OF MATERIAL		
PC	QTY	DESCRIPTION
9G	1	12/12'6/6'3/S (GUARDRAIL)
34G	1	12/12'6/6'3/S SRT-1 (GUARDRAIL)
39G	1	12/12'6/S SRT-2 (GUARDRAIL)
700A	1	CABLE ANCHOR BRACKET
705G	1	2"ø x 5 1/2" PIPE
742G	2	6'0 TUBE SLEEVE
775G	1	5/8 x 6 x 8 BEARING PLATE
907G	1	12/BUFFER/ROLLED (TERMINAL)
3000G	1	3/4 x 6'6 CABLE
3300G	20	5/8" WASHER
3340G	62	5/8" HEX NUT
3360G	44	5/8"ø x 1 1/4" SPLICE BOLT
3380G	8	5/8"ø x 1 1/2" HEX HD BOLT
3497G	2	5/8"ø x 9 1/2" HEX HD BOLT
3500G	2	5/8"ø x 10" POST BOLT
3580G	6	5/8"ø x 18" POST BOLT
3900G	1	1" WASHER
3910G	2	1" HEX NUT
4063B	6	6'0 POST 6 x 8
4075B	6	14" BLOCK 6 x 8
6058B	2	3' 9 POST 5 1/2 x 7 1/2
5968G	2	16d NAIL SRT
9852A	1	STRUT ASSEMBLY
9960G	4	SLOT GUARD
9961G	1	3/8 x 3 x 4 PLATE WASHER

BEARING PLATE ORIENTATION

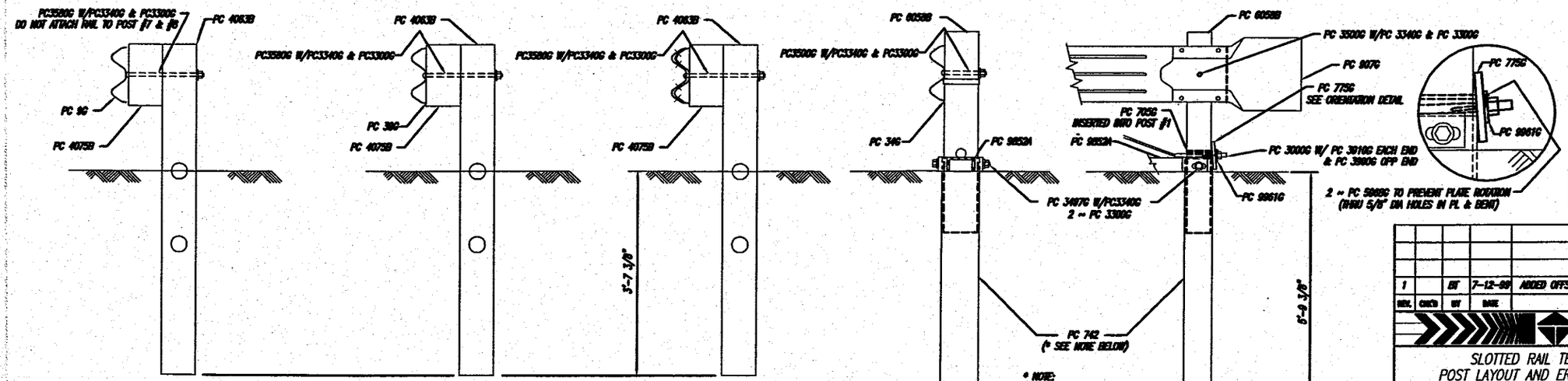

SECTION "D-D" (@ POST #7 & #8)

SECTION "C-C" (@ POSTS #4, & #5)

SECTION "B-B" (@ POSTS #3 & #6)

SECTION "A-A" (@ POST #2)

ENLARGED VIEW @ POST #1

* NOTE:
POST SLEEVE TUBE x 4'-6" LG WITH 18" x 1/4" x 24" SOIL PLATE IS AN AVAILABLE OPTION FOR POSTS #1 & #2.

This drawing and the information shown thereon is the sole property of TRINITY INDUSTRIES, INC. Neither the drawing nor such information is to be used for any purpose other than that for which it was specifically furnished by TRINITY INDUSTRIES, INC., nor is any reproduction authorized without written permission.

REV.	CHK'D	BY	DATE	REMARKS
1		BT	7-12-99	ADDED OFFSET NOTE & LENGTH OF NEED

SRT-350

SLOTTED RAIL TERMINAL
POST LAYOUT AND ERECTION DETAILS
SRT-350 (12.5, 8 POST)

DRAWN: B. TRANCH
CHECKED:
APPROVED:
DATE: 5-21-99
ENG. FILE #: SS444
SHEET No.: E1 OF 1
DRAWING No.: SS 444
REV. 1

CUSTOMER: P.O. No.:

TRINITY INDUSTRIES, INC.
HIGHWAY SAFETY PRODUCTS
2525 STEMMONS FREEWAY, DALLAS TX 75207

OFFSET NOTE:
THE POST OFFSET DIMENSION IS GIVEN TO THE CENTER OF THE TRAFFIC FACE OF POST No 1 (HBA)

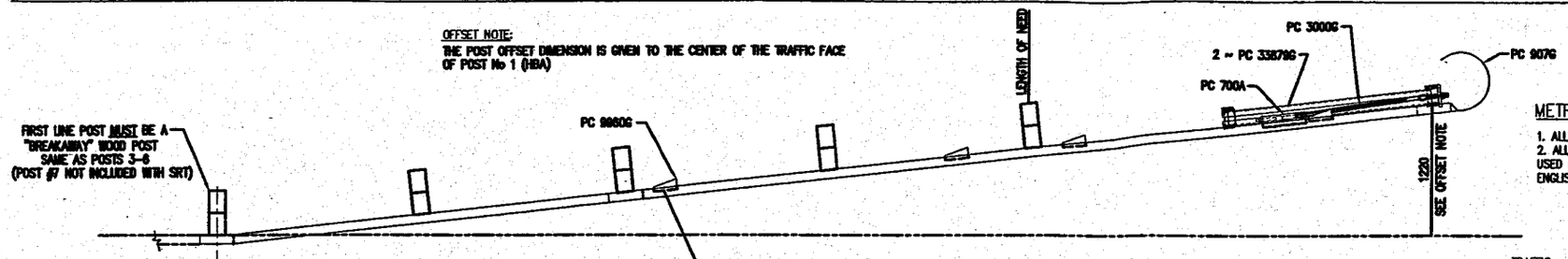

METRIC MEASUREMENTS NOTE:

1. ALL DIMENSION SHOWN ARE IN mm UNLESS NOTED
2. ALL HARDWARE, WOOD PRODUCTS AND OTHER FABRICATED MATERIAL USED IN THIS SYSTEM WILL BE CONVERTED TO NEAREST AVAILABLE ENGLISH MEASUREMENTS.

BILL OF MATERIAL

PC	QTY	DESCRIPTION
3G	1	3/305/BACKUP (GUARDRAIL)
9G	1	3/3810/1905/S (GUARDRAIL)
30G	1	3/3810/S SRT-1 (GUARDRAIL)
39G	1	3/3810/S SRT-2 (GUARDRAIL)
700A	1	CABLE ANCHOR BRACKET
907G	1	3/BUFFER/ROLLED (TERMINAL)
3000G	1	19 x 1980 CABLE
3300G	14	16 WASHER
3340G	58	16 HEX NUT
3360G	44	16 ø x 32 SPLICE BOLT
3380G	8	16 ø x 38 HEX HD BOLT
3400G	2	16 ø x 50 POST BOLT
3580G	4	16 ø x 455 POST BOLT
3701G	10	19 WASHER
3704G	4	19 HEX NUT
3718G	4	19 ø x 76 HEX HD BOLT (A325)
3900G	1	25 WASHER
3910G	2	25 HEX NUT
4063B	4	WOOD 1803 POST 150 x 200 CRT
4075B	4	WOOD 360 BLOCK 150 x 200 DR
4254G	5	10 WASHER
4258G	4	10 LOCKWASHER
4261G	1	10 ø x 38 HEX HD BOLT (GR 5)
4699G	4	19 LOCKWASHER
6321G	4	10 ø x 50 HEX HD BOLT (GR 5)
6405G	5	10 HEX NUT
9960G	4	SLOT GUARD
9961G	1	10 x 76 x 102 PLATE WASHER
33876A	1	HBA POST 1 TOP (W150 x 13)
33877A	1	HBA POST 2 TOP (W150 x 13)
33878A	2	HBA POST 1 & 2 BOT (TS 152 x 102)
33879G	2	ANGLE STRUT 2 x 2 x 3/8
33880G	1	25 x 152 x 203 BEARING PLATE
33881G	1	CABLE WEB PL 102 x 6

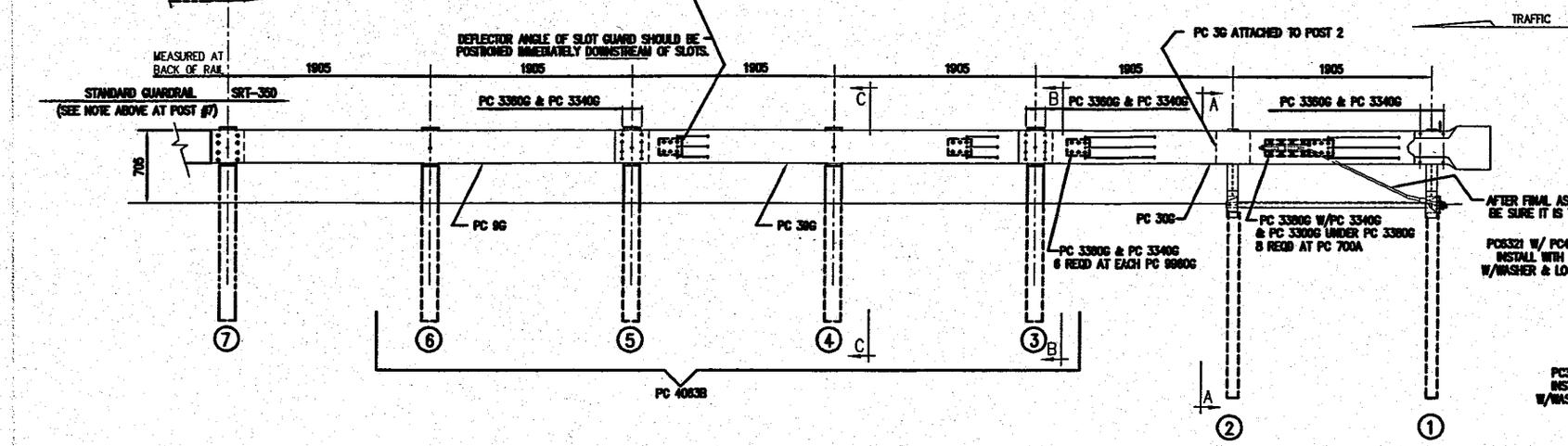

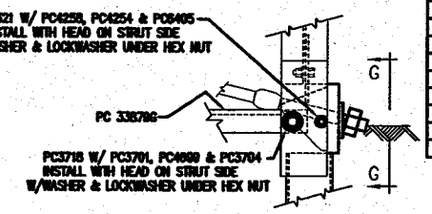

DETAIL "G"
(@ POST #1)

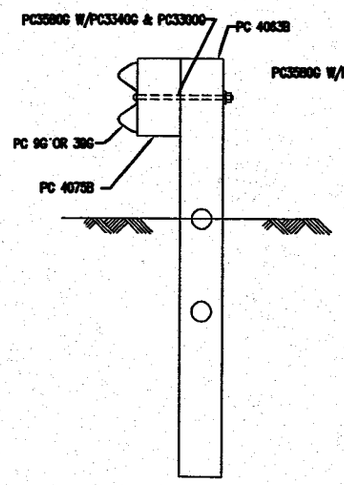

SECTION "C-C"
(@ POST #4 & #6)

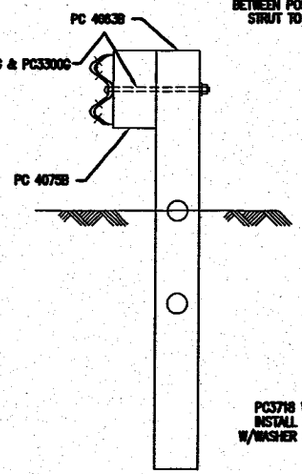

SECTION "B-B"
(@ POSTS #3 & #5)

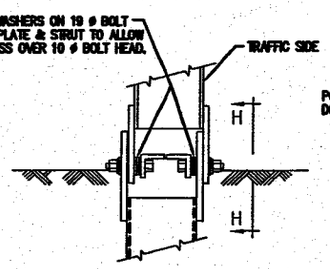

DETAIL "H"
(@ POST #2)

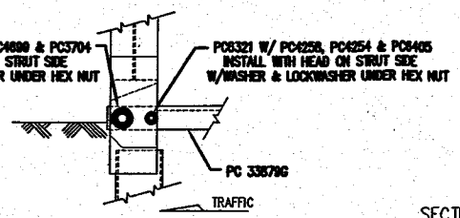

VIEW "H-H"
(@ POST #2)

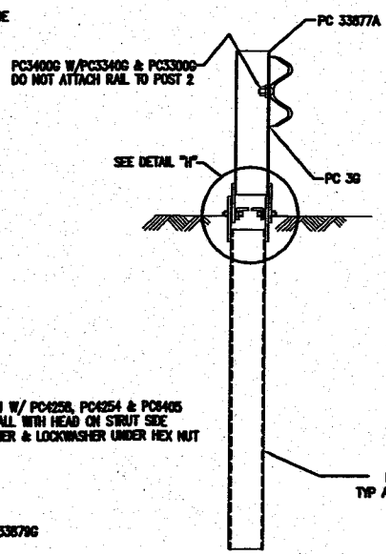

SECTION "A-A"
(@ POST #2)

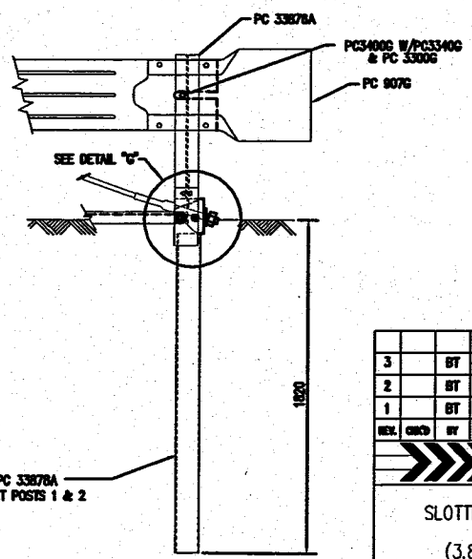

ENLARGED VIEW @ POST #1

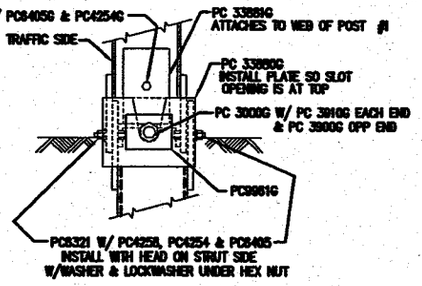

VIEW "G-G"
(@ POST #1)

METRIC

REV.	CHK'D	BY	DATE	REMARKS
3		BT	4-12-01	CORRECTED EMBEDMENT DIMENSION AT POSTS 1 & 2
2		BT	4-4-01	REVISED DETAIL "G"
1		BT	2-8-01	REMOVED PC5156, 5355 & 6718 REPLACED WITH PC 3718 & 6321

SRT-350

SLOTTED RAIL TERMINAL SRT-350
ERECTION DETAILS
(3.81 m PANELS, HBA POSTS)

TRINITY INDUSTRIES, INC.
HIGHWAY SAFETY PRODUCTS
2525 STEMMONS FREEWAY, DALLAS, TX 75207

DRAWN B.T.
CHECKED
APPROVED
DATE 1-19-01
ENG. FILE # SS351-01M
SHEET EI OF I
DRAWING NO. SS 351
REV. 3

This drawing and the information shown thereon is the sole property of TRINITY INDUSTRIES, INC. Neither the drawing nor such information is to be used for any purpose other than that for which it was specifically furnished by TRINITY INDUSTRIES, INC., nor is any reproduction authorized without written permission.

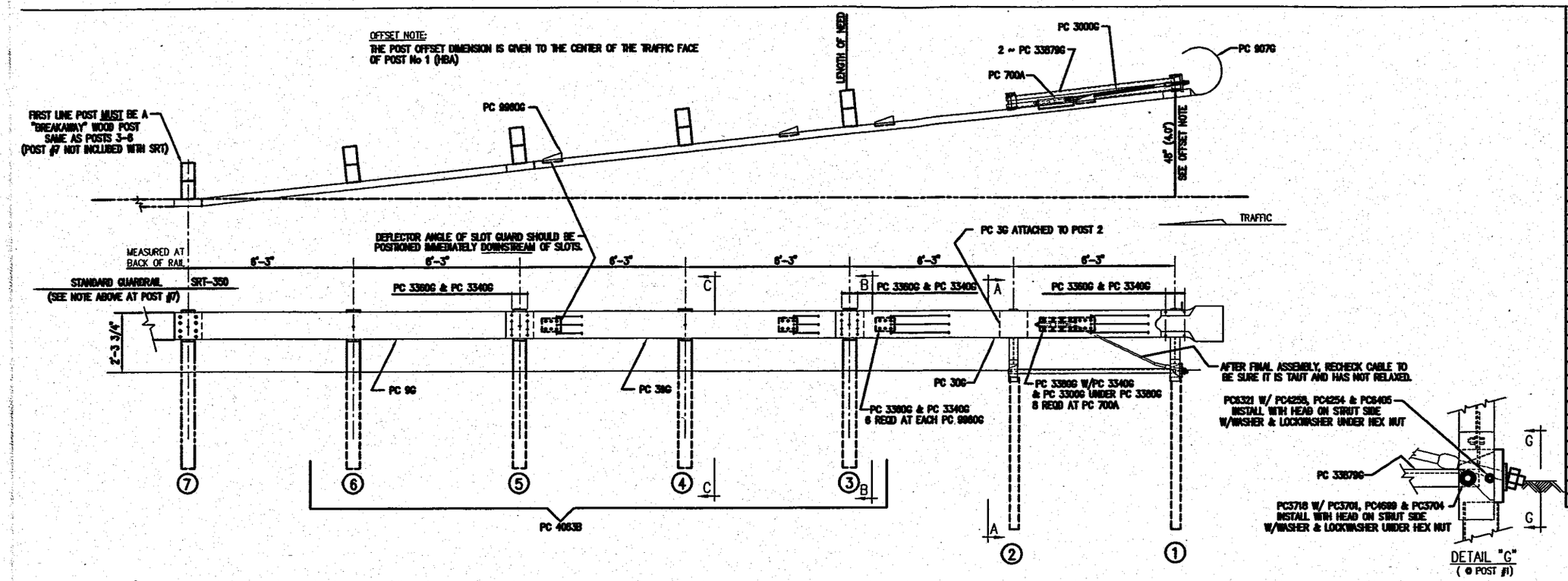

BILL OF MATERIAL

PC	QTY	DESCRIPTION
3G	1	12/12'/BACKUP (GUARDRAIL)
9G	1	12/12'6/6'3/S (GUARDRAIL)
30G	1	12/12'6/S SRT-1 (GUARDRAIL)
39G	1	12/12'6/S SRT-2 (GUARDRAIL)
700A	1	CABLE ANCHOR BRACKET
907G	1	12/BUFFER/ROLLED (TERMINAL)
3000G	1	3/4 x 6'6 CABLE
3300G	14	5/8" WASHER
3340G	58	5/8" HEX NUT
3360G	44	5/8"ø x 1 1/4" SPLICE BOLT
3380G	8	5/8"ø x 1 1/2" HEX HD BOLT
3400G	2	5/8"ø x 2" POST BOLT
3580G	4	5/8"ø x 18" POST BOLT
3701G	10	3/4" WASHER
3704G	4	3/4" HEX NUT
3718G	4	3/4"ø x 3" HEX HD BOLT (A325)
3900G	1	1" WASHER
3910G	2	1" HEX NUT
4063B	4	6'0 POST 6 x 8
4075B	4	14" BLOCK 6 x 8
4254G	5	3/8" WASHER
4258G	4	3/8" LOCKWASHER
4261G	1	3/8"ø x 1 1/2" HEX HD BOLT (GR 5)
4699G	4	3/4" LOCKWASHER
6321G	4	3/8"ø x 2" HEX HD BOLT (GR 5)
6405G	5	3/8" HEX NUT
9960G	4	SLOT GUARD
9961G	1	3/8 x 3 x 4 PLATE WASHER
33876A	1	HBA POST 1 TOP (W6 x 8.5)
33877A	1	HBA POST 2 TOP (W6 x 8.5)
33878A	2	HBA POST 1 & 2 BOT (TS 6 x 4)
33879G	2	ANGLE STRUT 2 x 2 x 3/8
33880G	1	1 x 6 x 8 BEARING PLATE
33881G	1	CABLE WEB PL 4 x 1/4

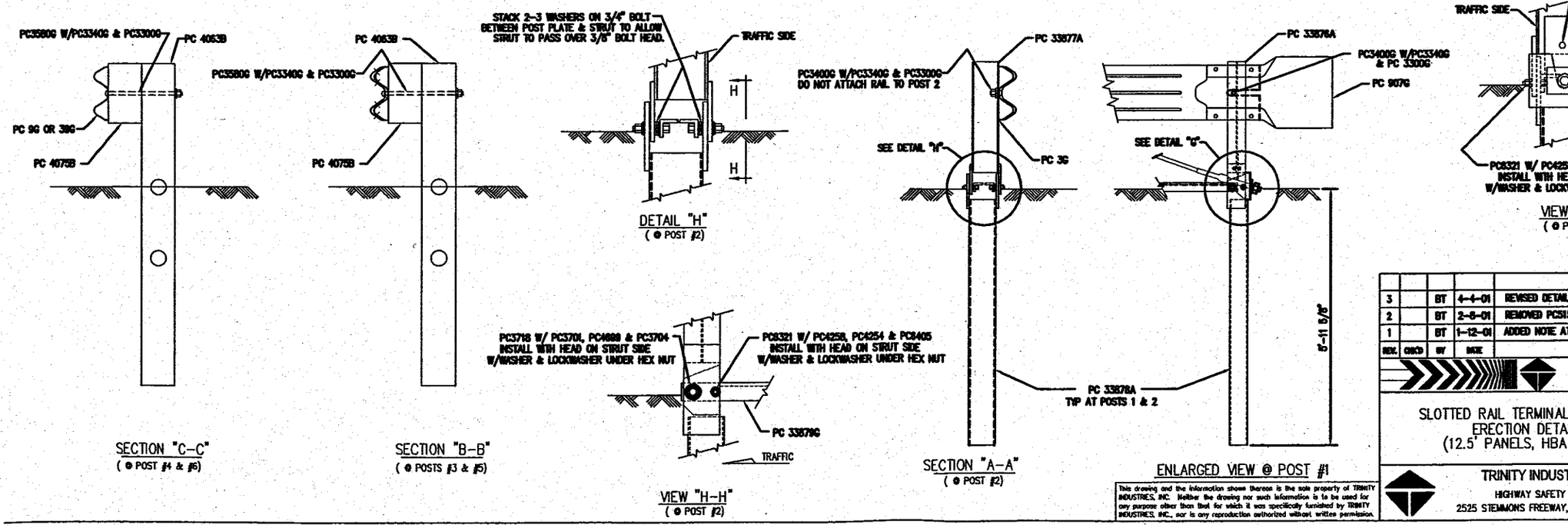

REV.	CHK'D	BY	DATE	REMARKS
3		BT	4-4-01	REVISED DETAIL "G"
2		BT	2-8-01	REMOVED PC5158, 5355 & 6718 REPLACED WITH PC 3718 & 6321
1		BT	1-12-01	ADDED NOTE AT POST 7, REVISED BILL OF MATERIAL

SRT-350

SLOTTED RAIL TERMINAL SRT-350
ERECTION DETAILS
(12.5' PANELS, HBA POSTS)

TRINITY INDUSTRIES, INC.
HIGHWAY SAFETY PRODUCTS
2525 STEMMONS FREEWAY, DALLAS, TX 75207

DRAWN	B.T.
CHECKED	
APPROVED	
DATE	12-12-00
ENG. FILE #	SS351-01E
SHEET	E1 OF 1
DRAWING NO.	SS 351
REV.	3

This drawing and the information shown thereon is the sole property of TRINITY INDUSTRIES, INC. Neither the drawing nor such information is to be used for any purpose other than that for which it was specifically furnished by TRINITY INDUSTRIES, INC., nor is any reproduction authorized without written permission.