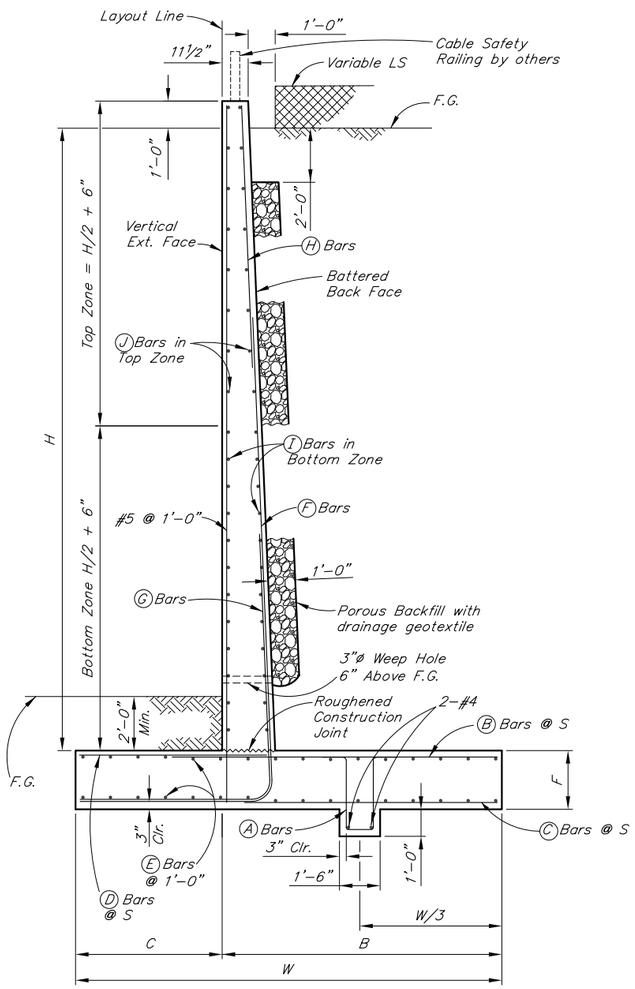


TYPICAL SECTION

No Scale

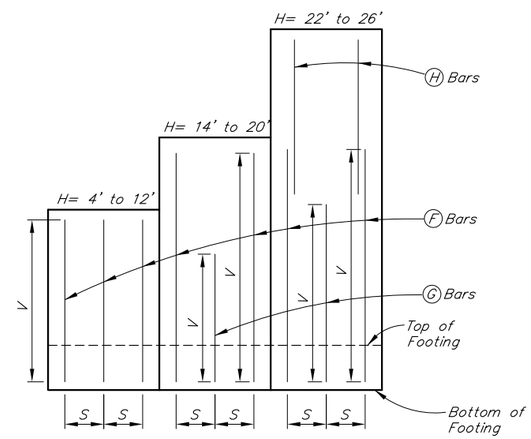


BACK FACE ELEVATION

No Scale

## GENERAL NOTES

DESIGN:.....AASHTO LRFD Bridge Design Specifications, 2017 Edition, with latest interim specifications.

LIVE LOAD SURCHARGE:.....Up to 2' of fill on level ground surface.

ADDITIONAL DEAD LOAD:.....Up to 2" Non-Structural Concrete on exterior face included.

SEISMIC PARAMETERS:.....$A_S \leq 0.40g$

FOUNDATION SOIL:.....$\phi \geq 28°$; Special footing design is required where foundation material is incapable of supporting bearing stress listed in the table.

RETAINED SOIL:.....$32° \leq \phi \leq 36°$
$120\ pcf \leq \gamma \leq 140\ pcf$

REINFORCED CONCRETE:.....Class A Concrete, f'c = 4,000 psi

REINFORCEMENT:.....ASTM A706 or A615, Grade 60, Fy = 60,000 psi

LOAD COMBINATIONS
AND LIMIT STATES:.....Service I = 1.0DC +1.0EV +1.0EH +1.0LS
Strength I = $\alpha$DC +$\beta$EV +$\eta$EH +1.75LS

Where:
$\alpha$:.....1.25 or 0.90, Whichever Controls Design
$\beta$:.....1.35 or 1.00, Whichever Controls Design
$\eta$:.....1.50 or 0.90, Whichever Controls Design
DC:.....Dead Load of Structure Components
EH:.....Horizontal Earth Fill Pressure
EV:.....Vertical Earth Pressure from Earth Fill Weight
LS:.....Live Load Surcharge

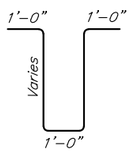


Ⓐ BARS

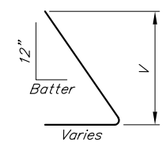


Ⓕ BARS AND Ⓖ BARS

See "B-07.10" for details not shown

## ABBREVIATIONS:

Ser I – Service I limit state
Str I – Strength I limit state
B' – Effective footing width (ft)
qo – Gross uniform bearing stress (ksf)
F.G. – Finished grade

## TABLE OF DIMENSIONS, REINFORCING STEEL, AND DATA

| DIMENSIONS | | | | | | | Ⓐ BARS | | | Ⓑ BARS | | Ⓒ BARS | | Ⓓ BARS | | Ⓔ BARS | Ⓕ BARS | | | Ⓖ BARS | | | Ⓗ BARS | | Ⓘ BARS | | Ⓙ BARS | | EFFECTIVE FOOTING WIDTHS AND BEARING PRESSURES | | Steel (Lbs/ft) Concrete (CF/ft) |
|---|---|---|---|---|---|---|---|---|---|---|---|---|---|---|---|---|---|---|---|---|---|---|---|---|---|---|---|---|---|---|---|
| H | W | F | C | B | Batter | Spacing S | Size | Spacing | Length | Size | Length | Size | Length | Size | Length | Size | Size | V | Length | Size | V | Length | Size | Length | Size | Spacing | Size | Spacing | Ser I B'-qo | Str I B'-qo | |
| 4'-0" | 4'-0" | 1'-0" | 1'-0" | 3'-0" | 1/2":12" | 12" | #4 | 1'-6" | 6'-2" | #4 | 2'-11" | #4 | 2'-6" | #4 | 1'-8" | #4 | #4 | 5'-7" | 7'-5" | – | – | – | – | – | #4 | 1'-6" | #4 | 1'-6" | 3.6-1.0 | 3.5-1.4 | 30-10.9 |
| 6'-0" | 4'-3" | 1'-0" | 1'-3" | 3'-0" | 1/2":12" | 12" | #4 | 1'-6" | 6'-2" | #4 | 2'-10" | #4 | 2'-5" | #4 | 1'-11" | #4 | #4 | 7'-7" | 9'-9" | – | – | – | – | – | #4 | 1'-0" | #4 | 1'-6" | 3.4-1.4 | 3.2-2.0 | 38-13.5 |
| 8'-0" | 4'-6" | 1'-0" | 1'-6" | 3'-0" | 1/2":12" | 9" | #4 | 1'-6" | 6'-2" | #4 | 2'-9" | #4 | 2'-4" | #4 | 2'-2" | #4 | #4 | 9'-7" | 12'-1" | – | – | – | – | – | #4 | 1'-0" | #4 | 1'-6" | 3.1-2.0 | 2.7-3.0 | 49-16.4 |
| 10'-0" | 5'-0" | 1'-2" | 1'-6" | 3'-6" | 1/2":12" | 9" | #4 | 1'-6" | 6'-6" | #4 | 3'-2" | #4 | 2'-9" | #4 | 2'-2" | #4 | #5 | 11'-9" | 14'-4" | – | – | – | – | – | #4 | 1'-0" | #4 | 1'-0" | 3.0-2.8 | 2.6-4.4 | 66-20.4 |
| 12'-0" | 5'-9" | 1'-3" | 1'-9" | 4'-0" | 1/2":12" | 9" | #4 | 1'-6" | 6'-8" | #4 | 3'-11" | #4 | 3'-2" | #4 | 2'-5" | #4 | #6 | 13'-10" | 16'-9" | – | – | – | – | – | #4 | 1'-0" | #4 | 1'-0" | 3.5-3.2 | 2.9-5.1 | 87-24.7 |
| 14'-0" | 6'-6" | 1'-3" | 2'-0" | 4'-6" | 1/2":12" | 6" | #4 | 1'-6" | 6'-8" | #4 | 4'-4" | #4 | 3'-7" | #4 | 2'-8" | #4 | #6 | 15'-10" | 19'-1" | #6 | 6'-4" | 11'-1" | – | – | #4 | 1'-0" | #4 | 1'-0" | 3.9-3.6 | 3.4-5.7 | 110-28.7 |
| 16'-0" | 7'-3" | 1'-6" | 2'-6" | 4'-9" | 1/2":12" | 6" | #4 | 1'-6" | 7'-2" | #4 | 4'-6" | #4 | 3'-9" | #4 | 3'-2" | #4 | #7 | 18'-1" | 21'-11" | #7 | 7'-7" | 12'-11" | – | – | #4 | 1'-0" | #4 | 1'-0" | 4.3-4.0 | 3.6-6.4 | 144-34.7 |
| 18'-0" | 8'-3" | 1'-8" | 2'-9" | 5'-6" | 1/2":12" | 6" | #4 | 1'-6" | 7'-6" | #5 | 5'-7" | #4 | 4'-5" | #4 | 3'-5" | #4 | #8 | 20'-3" | 24'-5" | #8 | 8'-8" | 14'-4" | – | – | #5 | 1'-0" | #4 | 1'-0" | 5.1-4.2 | 4.4-6.6 | 197-41.0 |
| 20'-0" | 9'-6" | 1'-8" | 3'-0" | 6'-6" | 5/8":12" | 6" | #4 | 1'-6" | 7'-6" | #5 | 6'-3" | #4 | 5'-1" | #4 | 3'-8" | #5 | #8 | 22'-3" | 27'-0" | #8 | 10'-0" | 15'-7" | – | – | #5 | 1'-0" | #4 | 1'-0" | 6.5-4.3 | 5.8-6.5 | 225-49.0 |
| 22'-0" | 11'-0" | 2'-0" | 3'-6" | 7'-6" | 5/8":12" | 6" | #4 | 1'-6" | 8'-2" | #6 | 7'-7" | #4 | 6'-0" | #4 | 4'-2" | #5 | #8 | 17'-8" | 23'-0" | #8 | 12'-5" | 17'-9" | #5 | 16'-10" | #5 | 1'-0" | #4 | 1'-0" | 8.1-4.3 | 7.4-6.3 | 258-59.4 |
| 24'-0" | 12'-3" | 2'-3" | 4'-0" | 8'-3" | 5/8":12" | 6" | #4 | 1'-6" | 8'-8" | #7 | 8'-7" | #4 | 6'-8" | #4 | 4'-8" | #5 | #9 | 20'-10" | 26'-9" | #9 | 13'-11" | 19'-10" | #5 | 18'-2" | #5 | 1'-0" | #4 | 1'-0" | 9.4-4.4 | 8.7-6.5 | 332-69.3 |
| 26'-0" | 14'-3" | 2'-9" | 4'-9" | 9'-6" | 5/8":12" | 6" | #4 | 1'-6" | 9'-8" | #8 | 10'-2" | #4 | 7'-10" | #4 | 5'-5" | #5 | #10 | 24'-5" | 31'-3" | #10 | 15'-7" | 22'-5" | #5 | 19'-6" | #5 | 1'-0" | #5 | 1'-0" | 11.8-4.4 | 11.1-6.3 | 449-85.6 |

State of Alaska DOT&PF
ALASKA STANDARD PLAN

CANTILEVER RETAINING WALL TYPE I

Adopted as an Alaska Standard Plan by: Carolyn Morehouse
Carolyn Morehouse, P.E.
Chief Engineer

Adoption Date: 07/17/2020

Last Code and Stds. Review
By: NWM Date: 7/17/20

Next Code and Standards Review date: 07/17/2029

DESIGNED BY: NWM CHECKED BY: BAS DRAWN BY: MCM

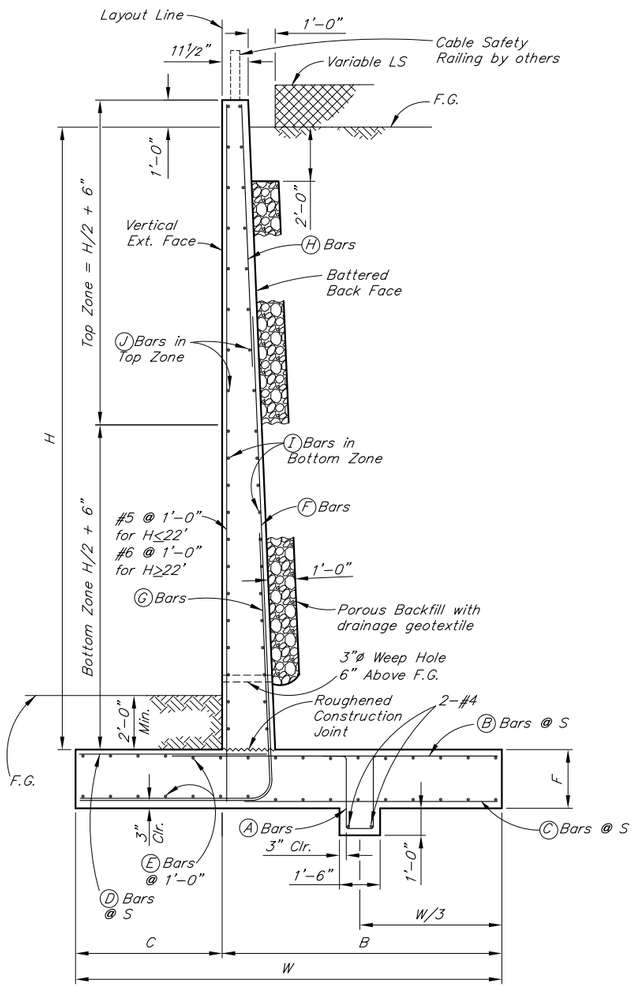


TYPICAL SECTION

No Scale

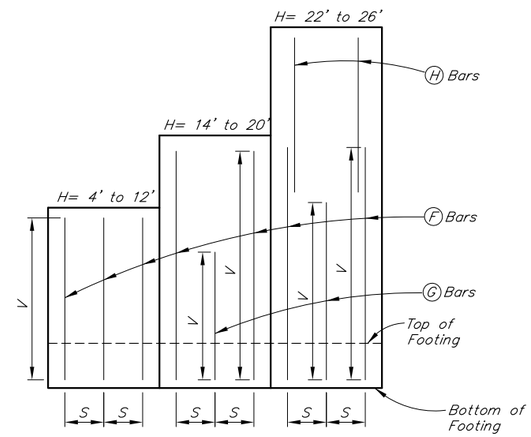


BACK FACE ELEVATION

No Scale

## GENERAL NOTES

DESIGN:.....AASHTO LRFD Bridge Design Specifications, 2017 Edition, with latest interim specifications.

LIVE LOAD SURCHARGE:.....Up to 2' of fill on level ground surface.

ADDITIONAL DEAD LOAD:.....Up to 2" Non-Structural Concrete on exterior face included.

SEISMIC PARAMETERS:.....$0.40g < A_s \leq 0.60g$

FOUNDATION SOIL:.....$\phi \geq 28°$; Special footing design is required where foundation material is incapable of supporting bearing stress listed in the table.

RETAINED SOIL:.....$32° \leq \phi \leq 36°$
$120\ pcf \leq \gamma \leq 140\ pcf$

REINFORCED CONCRETE:.....Class A Concrete, f'c = 4,000 psi

REINFORCEMENT:.....ASTM A706 or A615, Grade 60, Fy = 60,000 psi

LOAD COMBINATIONS AND LIMIT STATES:.....
Service I = 1.0DC +1.0EV +1.0EH +1.0LS
Strength I = $\alpha$DC +$\beta$EV +$\eta$EH +1.75LS
Extreme I = 1.0DC +1.0EV +1.0EH +1.0EQD +1.0EQE

Where:
$\alpha$:.....1.25 or 0.90, Whichever Controls Design
$\beta$:.....1.35 or 1.00, Whichever Controls Design
$\eta$:.....1.50 or 0.90, Whichever Controls Design
DC:.....Dead Load of Structure Components
EH:.....Horizontal Earth Fill Pressure
EV:.....Vertical Earth Pressure from Earth Fill Weight
LS:.....Live Load Surcharge
EQE:.....Seismic Earth Pressure
EQD:.....Soil and Structural and Nonstructural Components Inertia

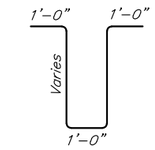


Ⓐ BARS

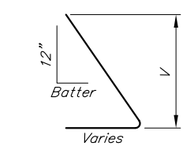


Ⓕ BARS AND Ⓖ BARS

See "B-07.10" for details not shown

## ABBREVIATIONS:

Ser I – Service I limit state
Str I – Strength I limit state
B' – Effective footing width (ft)
qo – Gross uniform bearing stress (ksf)
F.G. – Finished grade

## TABLE OF DIMENSIONS, REINFORCING STEEL, AND DATA

| DIMENSIONS | | | | | | | Ⓐ BARS | | | Ⓑ BARS | | Ⓒ BARS | | Ⓓ BARS | | Ⓔ BARS | Ⓕ BARS | | | Ⓖ BARS | | | Ⓗ BARS | | Ⓘ BARS | | Ⓙ BARS | | EFFECTIVE FOOTING WIDTHS AND BEARING PRESSURES | | | Steel (Lbs/ft) Concrete (CF/ft) |
|---|---|---|---|---|---|---|---|---|---|---|---|---|---|---|---|---|---|---|---|---|---|---|---|---|---|---|---|---|---|---|---|---|
| H | W | F | C | B | Batter | Spacing S | Size | Spacing | Length | Size | Length | Size | Length | Size | Length | Size | Size | V | Length | Size | V | Length | Size | Length | Size | Spacing | Size | Spacing | Ser I B'-qo | Str I B'-qo | Ext I B'-qo | |
| 4'-0" | 4'-0" | 1'-0" | 1'-0" | 3'-0" | 1/2":12" | 12" | #4 | 1'-6" | 6'-2" | #4 | 2'-11" | #4 | 2'-6" | #4 | 1'-8" | #4 | #4 | 5'-7" | 7'-5" | – | – | – | – | – | #4 | 1'-6" | #4 | 1'-6" | 3.6-1.0 | 3.5-1.4 | 2.7-1.2 | 30-10.9 |
| 6'-0" | 4'-3" | 1'-0" | 1'-3" | 3'-0" | 1/2":12" | 12" | #4 | 1'-6" | 6'-2" | #4 | 2'-10" | #4 | 2'-5" | #4 | 1'-11" | #4 | #4 | 7'-7" | 9'-9" | – | – | – | – | – | #4 | 1'-0" | #4 | 1'-6" | 3.4-1.4 | 3.2-2.0 | 2.4-1.9 | 38-13.5 |
| 8'-0" | 4'-9" | 1'-3" | 1'-6" | 3'-3" | 1/2":12" | 12" | #4 | 1'-6" | 6'-8" | #4 | 3'-4" | #4 | 2'-7" | #4 | 2'-2" | #4 | #5 | 9'-10" | 12'-4" | – | – | – | – | – | #4 | 1'-0" | #4 | 1'-6" | 3.4-2.0 | 3.0-3.0 | 2.0-3.1 | 50-17.8 |
| 10'-0" | 5'-6" | 1'-3" | 1'-9" | 3'-9" | 1/2":12" | 9" | #4 | 1'-6" | 6'-8" | #4 | 3'-9" | #4 | 3'-0" | #4 | 2'-5" | #4 | #5 | 11'-10" | 14'-8" | – | – | – | – | – | #4 | 1'-0" | #4 | 1'-0" | 3.9-2.3 | 3.5-3.5 | 2.1-4.0 | 69-21.5 |
| 12'-0" | 6'-3" | 1'-3" | 2'-0" | 4'-3" | 1/2":12" | 9" | #4 | 1'-6" | 6'-8" | #4 | 4'-2" | #4 | 3'-5" | #4 | 2'-8" | #4 | #6 | 13'-10" | 17'-0" | – | – | – | – | – | #4 | 1'-0" | #4 | 1'-0" | 4.4-2.7 | 3.9-4.1 | 2.2-5.1 | 89-25.3 |
| 14'-0" | 7'-6" | 1'-6" | 2'-4" | 5'-2" | 1/2":12" | 9" | #4 | 1'-6" | 7'-2" | #5 | 5'-5" | #4 | 4'-3" | #4 | 3'-0" | #4 | #7 | 16'-1" | 19'-8" | #7 | 8'-9" | 12'-4" | – | – | #4 | 1'-0" | #4 | 1'-0" | 5.6-2.9 | 5.1-4.3 | 2.8-5.5 | 110-31.9 |
| 16'-0" | 8'-3" | 1'-8" | 2'-9" | 5'-6" | 5/8":12" | 9" | #4 | 1'-6" | 7'-6" | #5 | 5'-6" | #4 | 4'-4" | #4 | 3'-5" | #4 | #7 | 18'-3" | 22'-7" | #7 | 10'-7" | 14'-10" | – | – | #5 | 1'-0" | #4 | 1'-0" | 6.0-3.3 | 5.4-4.9 | 3.0-7.0 | 131-39.1 |
| 18'-0" | 9'-6" | 1'-8" | 3'-0" | 6'-6" | 5/8":12" | 9" | #4 | 1'-6" | 7'-6" | #7 | 7'-2" | #4 | 5'-3" | #4 | 3'-8" | #4 | #8 | 20'-3" | 24'-11" | #8 | 11'-10" | 16'-6" | – | – | #5 | 1'-0" | #4 | 1'-0" | 7.3-3.4 | 6.7-5.0 | 3.8-6.9 | 174-45.0 |
| 20'-0" | 10'-3" | 1'-10" | 3'-4" | 6'-11" | 5/8":12" | 6" | #4 | 1'-6" | 7'-10" | #6 | 7'-1" | #4 | 5'-6" | #4 | 4'-0" | #5 | #8 | 22'-5" | 27'-6" | #8 | 11'-0" | 16'-1" | – | – | #5 | 1'-0" | #4 | 1'-0" | 7.7-3.8 | 7.1-5.6 | 3.7-8.4 | 239-52.0 |
| 22'-0" | 11'-6" | 2'-0" | 3'-6" | 8'-0" | 5/8":12" | 6" | #4 | 1'-6" | 8'-2" | #7 | 8'-5" | #4 | 6'-6" | #4 | 4'-2" | #5 | #9 | 18'-11" | 24'-3" | #9 | 12'-5" | 17'-9" | #5 | 16'-10" | #5 | 1'-0" | #4 | 1'-0" | 9.0-4.1 | 8.3-6.0 | 4.5-8.6 | 305-60.4 |
| 24'-0" | 12'-9" | 2'-3" | 4'-3" | 8'-6" | 3/4":12" | 6" | #4 | 1'-6" | 8'-8" | #7 | 8'-7" | #4 | 6'-8" | #4 | 4'-11" | #5 | #9 | 21'-1" | 27'-6" | #9 | 13'-4" | 19'-9" | #5 | 18'-2" | #5 | 1'-0" | #5 | 1'-0" | 10.2-4.2 | 9.5-6.1 | 5.2-8.8 | 356-73.7 |
| 26'-0" | 14'-0" | 2'-6" | 4'-9" | 9'-3" | 3/4":12" | 6" | #4 | 1'-6" | 9'-2" | #7 | 9'-3" | #4 | 7'-3" | #4 | 5'-5" | #5 | #10 | 24'-6" | 31'-7" | #10 | 15'-0" | 22'-0" | #5 | 19'-6" | #6 | 1'-0" | #5 | 1'-0" | 11.5-4.4 | 10.7-6.4 | 6.0-9.0 | 455-85.2 |

State of Alaska DOT&PF
ALASKA STANDARD PLAN

# CANTILEVER RETAINING WALL TYPE I – HIGH SEISMIC

Adopted as an Alaska Standard Plan by: Carolyn Morehouse
Carolyn Morehouse, P.E.
Chief Engineer

Adoption Date: 07/17/2020

Last Code and Stds. Review
By: NWM Date: 7/17/20

Next Code and Standards Review date: 07/17/2030

DESIGNED BY: NWM CHECKED BY: BAS DRAWN BY: MCM

B-04.10HS

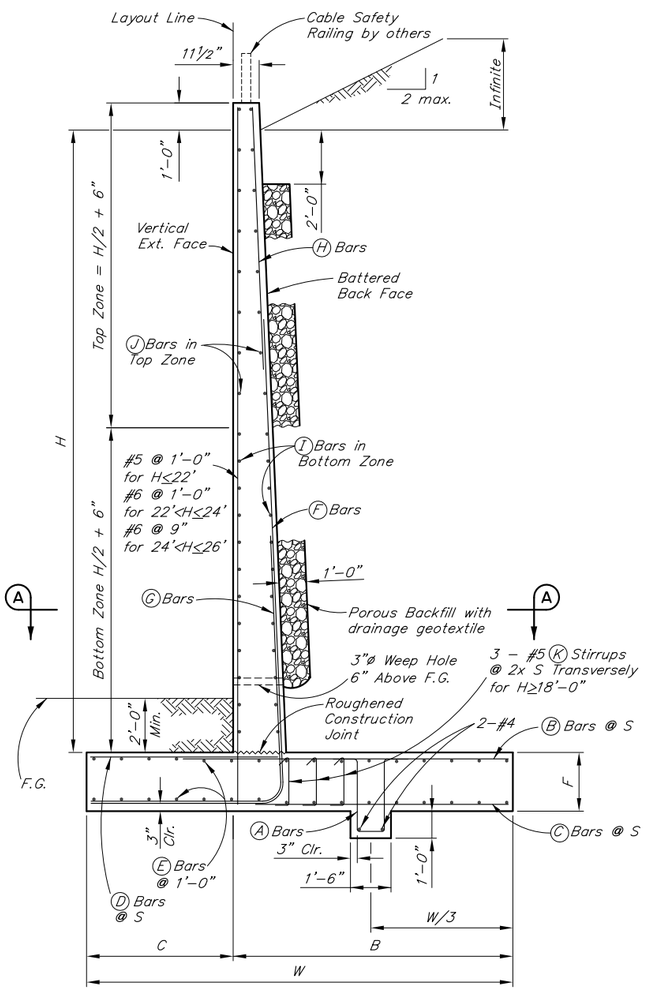


TYPICAL SECTION

No Scale

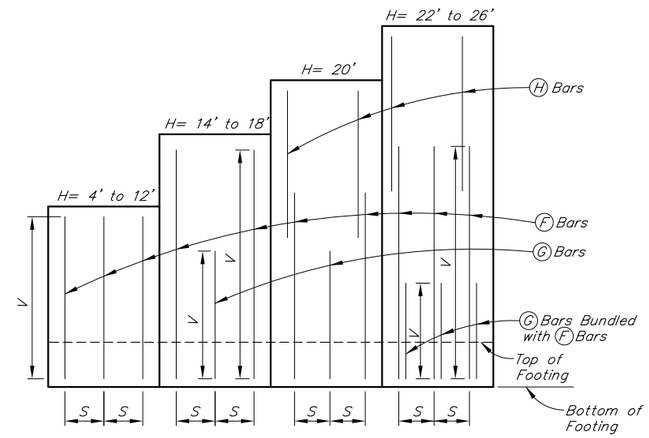


BACK FACE ELEVATION

No Scale

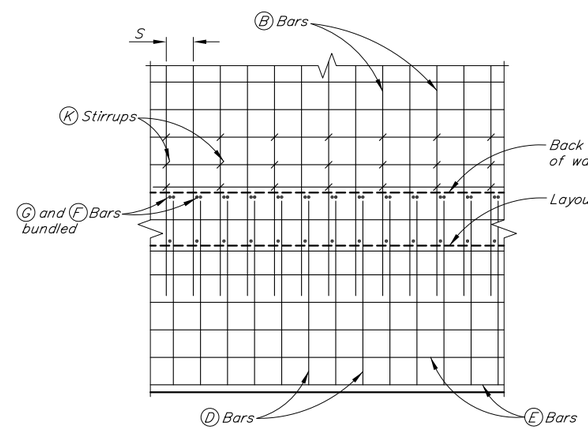


SECTION A-A

No Scale

## GENERAL NOTES

DESIGN:.....AASHTO LRFD Bridge Design Specifications, 2017 Edition, with latest interim specifications.

ADDITIONAL DEAD LOAD:.....Up to 2" Non-Structural Concrete on exterior face included.

SEISMIC PARAMETERS:.....$A_S \leq 0.40g$

FOUNDATION SOIL:.....$\phi \geq 28°$; Special footing design is required where foundation material is incapable of supporting bearing stress listed in the table.

RETAINED SOIL:.....$32° \leq \phi \leq 36°$
$120\ pcf \leq \gamma \leq 140\ pcf$

REINFORCED CONCRETE:.....Class A Concrete, f'c = 4,000 psi

REINFORCEMENT:.....ASTM A706 or A615, Grade 60, Fy = 60,000 psi

LOAD COMBINATIONS AND LIMIT STATES:.....Service I = 1.0DC +1.0EV +1.0EH
Strength I = $\alpha DC + \beta EV + \eta EH$

Where:
$\alpha$:.....1.25 or 0.90, Whichever Controls Design
$\beta$:.....1.35 or 1.00, Whichever Controls Design
$\eta$:.....1.50 or 0.90, Whichever Controls Design
DC:.....Dead Load of Structure Components
EH:.....Horizontal Earth Fill Pressure
EV:.....Vertical Earth Pressure from Earth Fill Weight

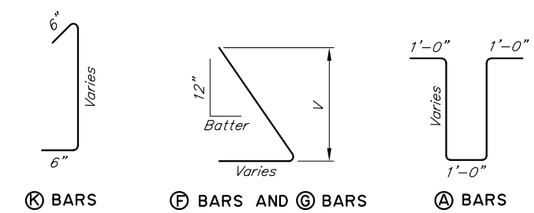


Ⓚ BARS  Ⓕ BARS AND Ⓖ BARS  Ⓐ BARS

See "B-07.10" for details not shown

## ABBREVIATIONS:

Ser I – Service I limit state
Str I – Strength I limit state
B' – Effective footing width (ft)
qo – Gross uniform bearing stress (ksf)
F.G. – Finished grade

TABLE OF DIMENSIONS, REINFORCING STEEL, AND DATA

| DIMENSIONS | | | | | | | Ⓐ BARS | | | Ⓑ BARS | | Ⓒ BARS | | Ⓓ BARS | | Ⓔ BARS | Ⓕ BARS | | | Ⓖ BARS | | | Ⓗ BARS | | Ⓘ BARS | | Ⓙ BARS | | EFFECTIVE FOOTING WIDTHS AND BEARING PRESSURES | | Steel (Lbs/ft) Concrete (CF/ft) |
|---|---|---|---|---|---|---|---|---|---|---|---|---|---|---|---|---|---|---|---|---|---|---|---|---|---|---|---|---|---|---|---|
| H | W | F | C | B | Batter | Spacing S | Size | Spacing | Length | Size | Length | Size | Length | Size | Length | Size | Size | V | Length | Size | V | Length | Size | Length | Size | Spacing | Size | Spacing | Ser I B'-qo | Str I B'-qo | |
| 4'-0" | 4'-0" | 1'-0" | 1'-0" | 3'-0" | 1/2":12" | 12" | #4 | 1'-6" | 6'-2" | #4 | 2'-11" | #4 | 2'-6" | #4 | 1'-8" | #4 | #4 | 4'-10" | 7'-5" | – | – | – | – | – | #4 | 1'-6" | #4 | 1'-6" | 3.5-1.1 | 3.4-1.4 | 30-10.9 |
| 6'-0" | 4'-3" | 1'-0" | 1'-3" | 3'-0" | 1/2":12" | 12" | #4 | 1'-6" | 6'-2" | #4 | 2'-10" | #4 | 2'-5" | #4 | 1'-11" | #4 | #4 | 6'-10" | 9'-9" | – | – | – | – | – | #4 | 1'-0" | #4 | 1'-6" | 3.2-1.6 | 3.0-2.2 | 38-13.5 |
| 8'-0" | 4'-6" | 1'-3" | 1'-6" | 3'-0" | 1/2":12" | 12" | #4 | 1'-6" | 6'-8" | #4 | 3'-1" | #4 | 2'-4" | #4 | 2'-2" | #4 | #5 | 8'-10" | 12'-4" | – | – | – | – | – | #4 | 1'-0" | #4 | 1'-6" | 2.6-2.6 | 2.3-4.0 | 50-17.5 |
| 10'-0" | 5'-3" | 1'-3" | 1'-6" | 3'-9" | 1/2":12" | 9" | #4 | 1'-6" | 6'-8" | #4 | 3'-9" | #4 | 3'-0" | #4 | 2'-2" | #4 | #6 | 10'-10" | 14'-5" | – | – | – | – | – | #4 | 1'-0" | #4 | 1'-0" | 2.6-3.8 | 2.2-5.9 | 76-21.2 |
| 12'-0" | 6'-6" | 1'-6" | 1'-9" | 4'-9" | 1/2":12" | 9" | #4 | 1'-6" | 7'-2" | #5 | 5'-1" | #4 | 3'-11" | #4 | 2'-5" | #4 | #7 | 12'-10" | 17'-0" | – | – | – | – | – | #4 | 1'-0" | #4 | 1'-0" | 3.3-4.3 | 2.9-6.7 | 106-27.3 |
| 14'-0" | 7'-9" | 1'-6" | 2'-9" | 5'-0" | 5/8":12" | 6" | #4 | 1'-6" | 7'-2" | #4 | 4'-8" | #4 | 3'-11" | #4 | 3'-5" | #5 | #7 | 14'-10" | 20'-3" | #7 | 8'-5" | 12'-7" | – | – | #5 | 1'-0" | #4 | 1'-0" | 4.3-4.1 | 3.8-6.3 | 148-33.4 |
| 16'-0" | 9'-9" | 1'-8" | 2'-9" | 7'-0" | 3/4":12" | 6" | #4 | 1'-6" | 7'-6" | #6 | 7'-2" | #4 | 5'-8" | #4 | 3'-5" | #5 | #8 | 16'-10" | 22'-9" | #8 | 9'-6" | 14'-0" | – | – | #5 | 1'-0" | #4 | 1'-0" | 6.1-4.4 | 5.5-6.5 | 207-43.1 |
| 18'-0" | 11'-3" | 1'-10" | 3'-8" | 7'-7" | 3/4":12" | 6" | #4 | 1'-6" | 7'-10" | #7 | 8'-1" | #4 | 6'-1" | #4 | 4'-4" | #5 | #9 | 18'-10" | 25'-11" | #9 | 10'-11" | 16'-5" | – | – | #5 | 1'-0" | #4 | 1'-0" | 7.5-4.4 | 6.9-6.5 | 283-51.7 |
| 20'-0" | 13'-3" | 1'-10" | 4'-8" | 8'-7" | 7/8":12" | 6" | #4 | 1'-6" | 7'-10" | #8 | 9'-1" | #4 | 6'-9" | #4 | 5'-4" | #5 | #9 | 17'-5" | 25'-10" | #9 | 11'-7" | 18'-5" | #5 | 22'-6" | #6 | 1'-0" | #5 | 1'-0" | 9.6-4.3 | 9.0-6.2 | 358-62.0 |
| 22'-0" | 15'-0" | 1'-10" | 5'-3" | 9'-9" | 7/8":12" | 6" | #4 | 1'-6" | 7'-10" | #9 | 10'-10" | #4 | 7'-9" | #4 | 5'-11" | #5 | #8 | 19'-7" | 28'-9" | #8 | 11'-8" | 19'-3" | #5 | 24'-6" | #5 | 1'-0" | #5 | 1'-0" | 11.4-4.4 | 10.7-6.4 | 495-70.4 |
| 24'-0" | 19'-0" | 2'-0" | 6'-0" | 13'-0" | 7/8":12" | 6" | #4 | 1'-6" | 8'-2" | 2x#9 | 14'-0" | #4 | 10'-11" | #4 | 6'-8" | #6 | #9 | 21'-7" | 31'-9" | #9 | 13'-1" | 21'-7" | #7 | 27'-2" | #6 | 1'-0" | #5 | 1'-0" | 16.3-4.4 | 15.6-6.2 | 807-86.3 |
| 26'-0" | 22'-3" | 2'-6" | 7'-6" | 14'-9" | 1":12" | 6" | #4 | 1'-0" | 9'-2" | 2x#10 | 16'-2" | #4 | 12'-2" | #4 | 8'-2" | #6 | #10 | 23'-10" | 36'-5" | #10 | 15'-0" | 25'-4" | #8 | 29'-5" | #6 | 1'-0" | #5 | 1'-0" | 20.2-4.4 | 19.4-6.2 | 1131-113.4 |

State of Alaska DOT&PF
ALASKA STANDARD PLAN

CANTILEVER RETAINING WALL TYPE II

Adopted as an Alaska Standard Plan by: Carolyn Morehouse
Carolyn Morehouse, P.E.
Chief Engineer

Adoption Date: 07/17/2020

Last Code and Stds. Review
By: NWM Date: 7/17/20

Next Code and Standards Review date: 07/17/2030

DESIGNED BY: NWM CHECKED BY: BAS DRAWN BY: MCM

# B-05.10HS

SHEET | of |

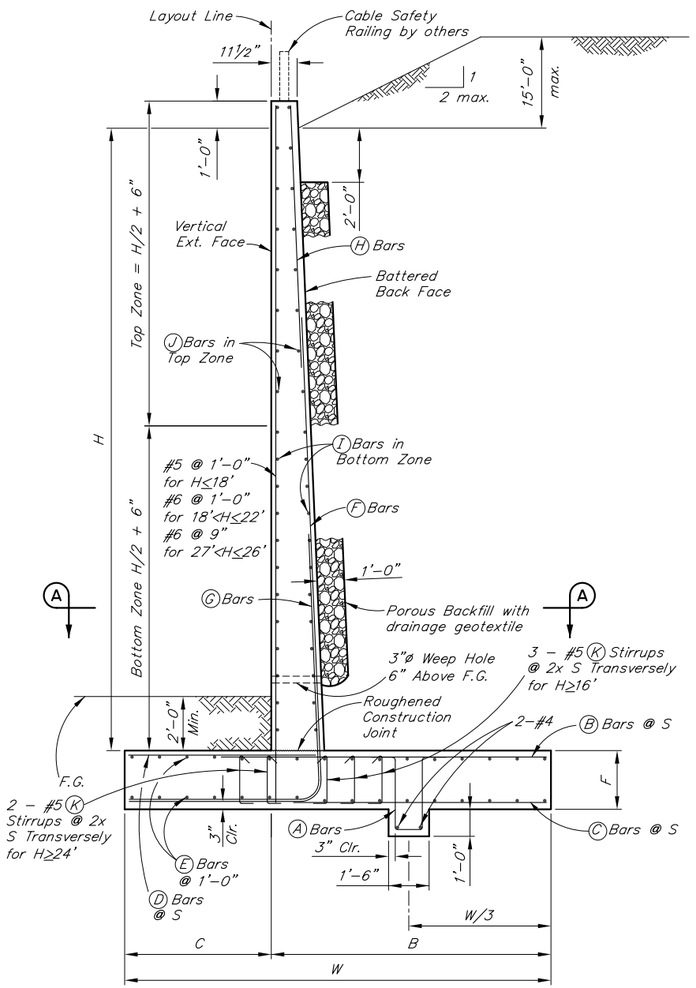


TYPICAL SECTION

No Scale

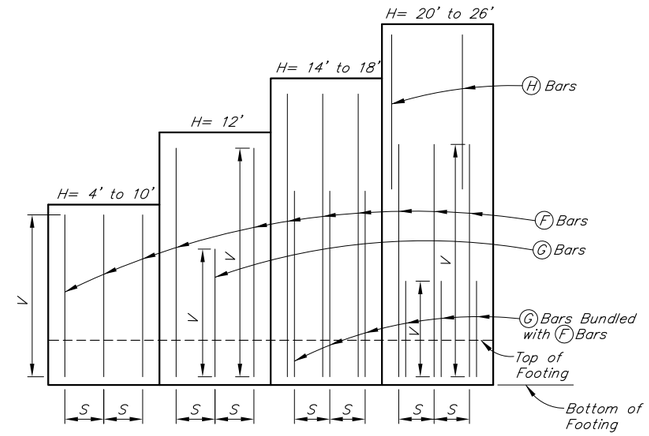


BACK FACE ELEVATION

No Scale

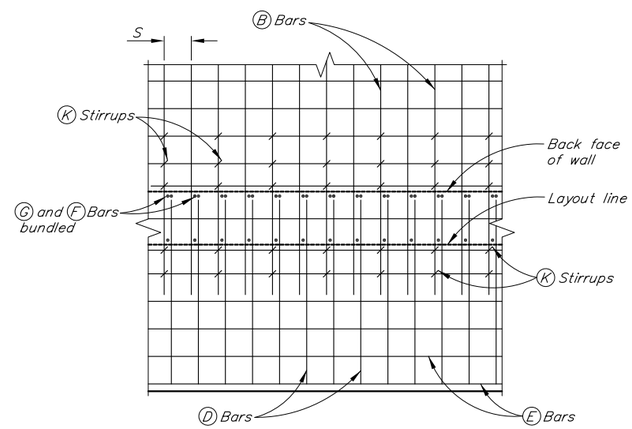


SECTION A-A

No Scale

## GENERAL NOTES

DESIGN:.....AASHTO LRFD Bridge Design Specifications, 2017 Edition, with latest interim specifications.

ADDITIONAL DEAD LOAD:.....Up to 2" Non-Structural Concrete on exterior face included.

SEISMIC PARAMETERS:.....$0.40g < A_s \leq 0.60g$

FOUNDATION SOIL:.....$\phi \geq 28°$; Special footing design is required where foundation material is incapable of supporting bearing stress listed in the table.

RETAINED SOIL:.....$32° \leq \phi \leq 36°$
$120\ pcf \leq \gamma \leq 140\ pcf$

REINFORCED CONCRETE:.....Class A Concrete, f'c = 4,000 psi

REINFORCEMENT:.....ASTM A706 or A615, Grade 60, Fy = 60,000 psi

LOAD COMBINATIONS AND LIMIT STATES:.....
Service I = 1.0DC +1.0EV +1.0EH
Strength I = $\alpha$DC +$\beta$EV +$\eta$EH
Extreme I = 1.0DC +1.0EV +1.0EH +1.0EQD +1.0EQE

Where:
$\alpha$:.....1.25 or 0.90, Whichever Controls Design
$\beta$:.....1.35 or 1.00, Whichever Controls Design
$\eta$:.....1.50 or 0.90, Whichever Controls Design
DC:.....Dead Load of Structure Components
EH:.....Horizontal Earth Fill Pressure
EV:.....Vertical Earth Pressure from Earth Fill Weight
EQE:.....Seismic Earth Pressure
EQD:.....Soil and Structural and Nonstructural Components Inertia

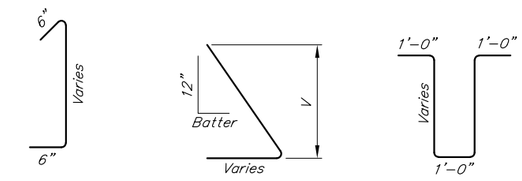


Ⓚ BARS  Ⓕ BARS AND Ⓖ BARS  Ⓐ BARS

See "B-07.10" for details not shown

## ABBREVIATIONS:

Ser I – Service I limit state
Str I – Strength I limit state
Ext I – Extreme event I limit state
B' – Effective footing width (ft)
qo – Gross uniform bearing stress (ksf)
F.G. – Finished grade

## TABLE OF DIMENSIONS, REINFORCING STEEL, AND DATA

| DIMENSIONS | | | | | | | Ⓐ BARS | | | Ⓑ BARS | | Ⓒ BARS | | Ⓓ BARS | | Ⓔ BARS | Ⓕ BARS | | | Ⓖ BARS | | | Ⓗ BARS | | Ⓘ BARS | | Ⓙ BARS | | EFFECTIVE FOOTING WIDTHS AND BEARING PRESSURES | | | Steel (Lbs/ft) Concrete (CF/ft) |
|---|---|---|---|---|---|---|---|---|---|---|---|---|---|---|---|---|---|---|---|---|---|---|---|---|---|---|---|---|---|---|---|---|
| H | W | F | C | B | Batter | Spacing S | Size | Spacing | Length | Size | Length | Size | Length | Size | Length | Size | Size | V | Length | Size | V | Length | Size | Length | Size | Spacing | Size | Spacing | Ser I B'-qo | Str I B'-qo | Ext I B'-qo | |
| 4'-0" | 6'-0" | 1'-3" | 1'-6" | 4'-6" | 1/2":12" | 12" | #4 | 1'-6" | 6'-8" | #4 | 4'-9" | #4 | 4'-0" | #4 | 2'-2" | #4 | #5 | 5'-10" | 8'-2" | – | – | – | – | – | #4 | 1'-6" | #4 | 1'-6" | 5.9–1.0 | 5.8–1.3 | 2.3–3.5 | 40–14.4 |
| 6'-0" | 7'-0" | 1'-3" | 2'-0" | 5'-0" | 1/2":12" | 9" | #4 | 1'-6" | 6'-8" | #4 | 5'-2" | #4 | 4'-5" | #4 | 2'-8" | #4 | #6 | 7'-10" | 10'-9" | – | – | – | – | – | #4 | 1'-0" | #4 | 1'-6" | 6.8–1.2 | 6.7–1.7 | 2.4–4.7 | 63–18.0 |
| 8'-0" | 8'-6" | 1'-8" | 2'-9" | 5'-9" | 1/2":12" | 9" | #4 | 1'-6" | 7'-6" | #5 | 6'-3" | #4 | 5'-1" | #4 | 3'-5" | #4 | #8 | 10'-3" | 14'-0" | – | – | – | – | – | #4 | 1'-0" | #4 | 1'-6" | 8.1–1.6 | 7.9–2.1 | 3.0–5.4 | 105–26.0 |
| 10'-0" | 9'-9" | 1'-9" | 3'-3" | 6'-6" | 1/2":12" | 6" | #4 | 1'-6" | 7'-8" | #5 | 6'-11" | #4 | 5'-9" | #4 | 3'-11" | #4 | #9 | 12'-4" | 16'-8" | – | – | – | – | – | #4 | 1'-0" | #4 | 1'-0" | 9.2–1.9 | 8.9–2.6 | 3.4–6.2 | 188–31.7 |
| 12'-0" | 11'-3" | 1'-10" | 3'-3" | 8'-0" | 5/8":12" | 6" | #4 | 1'-6" | 7'-10" | #6 | 8'-7" | #4 | 7'-0" | #4 | 3'-11" | #5 | #9 | 14'-5" | 19'-0" | #9 | 9'-1" | 13'-8" | – | – | #4 | 1'-0" | #4 | 1'-0" | 10.2–2.3 | 9.9–3.2 | 4.2–6.9 | 214–39.0 |
| 14'-0" | 12'-3" | 1'-10" | 3'-9" | 8'-6" | 5/8":12" | 6" | #4 | 1'-6" | 7'-10" | #7 | 9'-4" | #4 | 7'-5" | #4 | 4'-5" | #5 | #8 | 16'-5" | 21'-7" | #8 | 9'-0" | 14'-2" | – | – | #5 | 1'-0" | #4 | 1'-0" | 10.9–2.6 | 10.6–3.7 | 4.3–8.0 | 321–44.2 |
| 16'-0" | 13'-6" | 2'-0" | 4'-0" | 9'-6" | 3/4":12" | 6" | #4 | 1'-6" | 8'-2" | #8 | 10'-6" | #4 | 8'-2" | #4 | 4'-8" | #5 | #9 | 18'-7" | 24'-4" | #9 | 10'-5" | 16'-1" | – | – | #5 | 1'-0" | #4 | 1'-0" | 11.7–3.1 | 11.3–4.4 | 4.7–9.0 | 440–53.9 |
| 18'-0" | 15'-0" | 2'-0" | 4'-6" | 10'-6" | 7/8":12" | 6" | #4 | 1'-6" | 8'-2" | #9 | 11'-11" | #4 | 8'-10" | #4 | 5'-2" | #5 | #9 | 20'-7" | 27'-2" | #9 | 11'-1" | 17'-7" | – | – | #5 | 1'-0" | #4 | 1'-0" | 13.0–3.4 | 12.5–4.8 | 5.8–8.8 | 505–62.9 |
| 20'-0" | 16'-3" | 2'-0" | 5'-3" | 11'-0" | 1":12" | 6" | #4 | 1'-6" | 8'-2" | #10 | 12'-11" | #4 | 8'-11" | #4 | 5'-11" | #5 | #9 | 18'-11" | 28'-4" | #9 | 11'-9" | 19'-5" | #8 | 16'-5" | #6 | 1'-0" | #5 | 1'-0" | 14.0–3.7 | 13.4–5.2 | 6.5–9.0 | 636–72.5 |
| 22'-0" | 18'-0" | 2'-0" | 5'-6" | 12'-6" | 1":12" | 6" | #4 | 1'-6" | 8'-2" | 2x#9 | 13'-4" | #4 | 10'-3" | #4 | 6'-2" | #5 | #10 | 22'-5" | 32'-3" | #10 | 13'-2" | 21'-2" | #8 | 17'-9" | #6 | 1'-0" | #5 | 1'-0" | 15.6–4.1 | 15.0–5.8 | 8.0–8.8 | 860–81.6 |
| 24'-0" | 19'-6" | 2'-3" | 6'-6" | 13'-0" | 1":12" | 6" | #4 | 1'-6" | 8'-8" | 2x#9 | 13'-8" | #4 | 10'-7" | #4 | 7'-2" | #6 | #10 | 23'-7" | 34'-10" | #10 | 15'-4" | 24'-6" | #9 | 19'-8" | #6 | 1'-0" | #5 | 1'-0" | 17.0–4.3 | 16.3–6.1 | 9.1–8.8 | 986–95.4 |
| 26'-0" | 22'-0" | 2'-6" | 7'-6" | 14'-6" | 1 1/8":12" | 6" | #4 | 1'-6" | 9'-2" | 2x#10 | 15'-8" | #4 | 11'-8" | #4 | 8'-2" | #6 | #11 | 25'-3" | 38'-2" | #11 | 15'-8" | 26'-4" | #10 | 21'-9" | #6 | 1'-0" | #5 | 1'-0" | 19.7–4.5 | 18.9–6.3 | 11.9–8.0 | 1291–116.6 |

State of Alaska DOT&PF
ALASKA STANDARD PLAN

CANTILEVER RETAINING WALL
TYPE II – HIGH SEISMIC

Adopted as an Alaska Standard Plan by: Carolyn Morehouse
Carolyn Morehouse, P.E.
Chief Engineer

Adoption Date: 07/17/2020

Last Code and Stds. Review
By: NWM Date: 7/17/20

Next Code and Standards Review date: 07/17/2030

DESIGNED BY: NWM CHECKED BY: BAS DRAWN BY: MCM

B-05.10HS

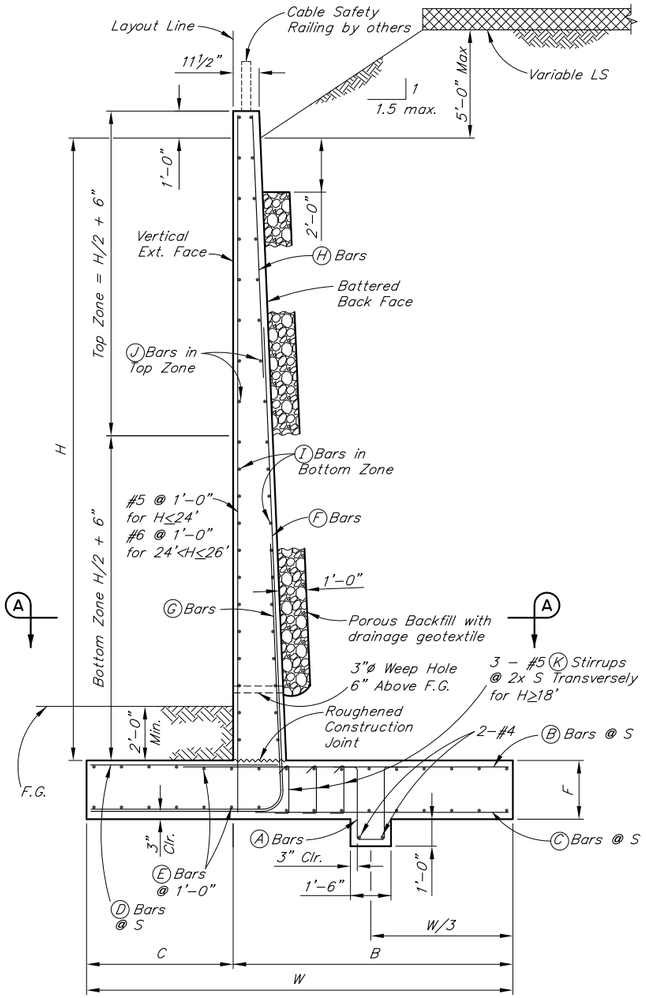


TYPICAL SECTION

No Scale

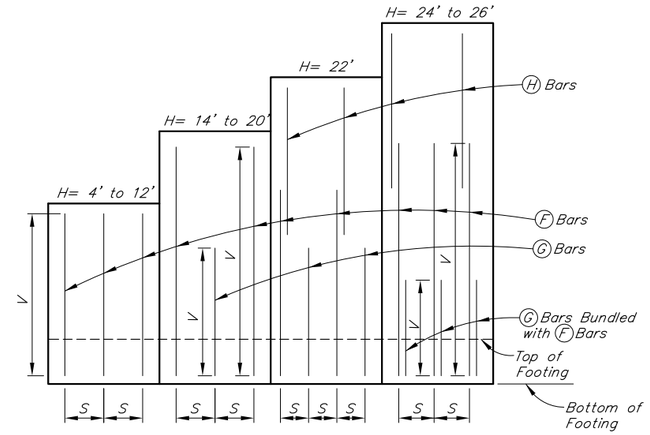


BACK FACE ELEVATION

No Scale

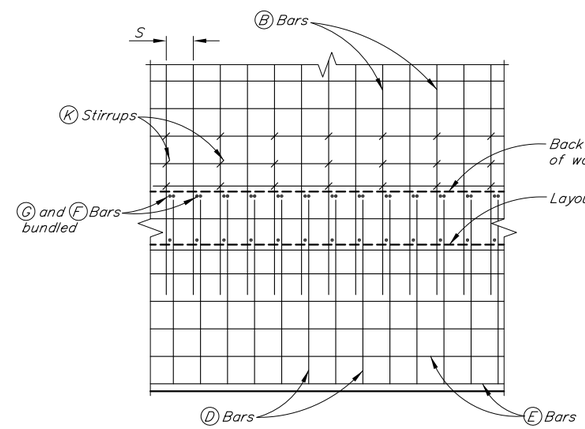


SECTION A-A

No Scale

## GENERAL NOTES

DESIGN:.....AASHTO LRFD Bridge Design Specifications, 2017 Edition, with latest interim specifications.

LIVE LOAD SURCHARGE:.....Up to 2' of fill on level ground surface.

ADDITIONAL DEAD LOAD:.....Up to 2" Non-Structural Concrete on exterior face included.

SEISMIC PARAMETERS:.....$A_s \leq 0.40g$

FOUNDATION SOIL:.....$\phi \geq 28°$; Special footing design is required where foundation material is incapable of supporting bearing stress listed in the table.

RETAINED SOIL:.....$32° \leq \phi \leq 36°$
$120\ pcf \leq \gamma \leq 140\ pcf$

REINFORCED CONCRETE:.....Class A Concrete, f'c = 4,000 psi

REINFORCEMENT:.....ASTM A706 or A615, Grade 60, Fy = 60,000 psi

LOAD COMBINATIONS AND LIMIT STATES:.....
Service I = $1.0DC + 1.0EV + 1.0EH + 1.0LS$
Strength I = $\alpha DC + \beta EV + \eta EH + 1.75LS$

Where:
$\alpha$:.....1.25 or 0.90, Whichever Controls Design
$\beta$:.....1.35 or 1.00, Whichever Controls Design
$\eta$:.....1.50 or 0.90, Whichever Controls Design
DC:.....Dead Load of Structure Components
EH:.....Horizontal Earth Fill Pressure
EV:.....Vertical Earth Pressure from Earth Fill Weight
LS:.....Live Load Surcharge

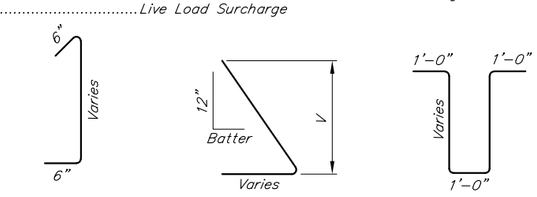


Ⓚ BARS  Ⓕ BARS AND Ⓖ BARS  Ⓐ BARS

See "B-07.10" for details not shown

## ABBREVIATIONS:

Ser I – Service I limit state
Str I – Strength I limit state
B' – Effective footing width (ft)
qo – Gross uniform bearing stress (ksf)
F.G. – Finished grade

## TABLE OF DIMENSIONS, REINFORCING STEEL, AND DATA

| DIMENSIONS | | | | | | | Ⓐ BARS | | | Ⓑ BARS | | Ⓒ BARS | | Ⓓ BARS | | Ⓔ BARS | Ⓕ BARS | | | Ⓖ BARS | | | Ⓗ BARS | | Ⓘ BARS | | Ⓙ BARS | | EFFECTIVE FOOTING WIDTHS AND BEARING PRESSURES | | Steel (Lbs/ft) Concrete (CF/ft) |
|---|---|---|---|---|---|---|---|---|---|---|---|---|---|---|---|---|---|---|---|---|---|---|---|---|---|---|---|---|---|---|---|
| H | W | F | C | B | Batter | Spacing S | Size | Spacing | Length | Size | Length | Size | Length | Size | Length | Size | Size | V | Length | Size | V | Length | Size | Length | Size | Spacing | Size | Spacing | Ser I B'-qo | Str I B'-qo | |
| 4'-0" | 4'-0" | 1'-0" | 1'-3" | 2'-9" | 1/2":12" | 12" | #4 | 1'-6" | 6'-2" | #4 | 2'-8" | #4 | 2'-3" | #4 | 1'-11" | #4 | #4 | 4'-10" | 7'-8" | – | – | – | – | – | #4 | 1'-6" | #4 | 1'-6" | 2.9-1.2 | 2.6-1.8 | 30-10.9 |
| 6'-0" | 4'-3" | 1'-0" | 1'-3" | 3'-0" | 1/2":12" | 12" | #4 | 1'-6" | 6'-2" | #4 | 2'-10" | #4 | 2'-5" | #4 | 1'-11" | #4 | #4 | 6'-10" | 9'-9" | – | – | – | – | – | #4 | 1'-0" | #4 | 1'-6" | 2.5-1.9 | 2.0-3.2 | 38-13.5 |
| 8'-0" | 5'-0" | 1'-2" | 1'-9" | 3'-3" | 1/2":12" | 9" | #4 | 1'-6" | 6'-6" | #4 | 3'-0" | #4 | 2'-7" | #4 | 2'-5" | #4 | #5 | 8'-10" | 12'-6" | – | – | – | – | – | #4 | 1'-0" | #4 | 1'-6" | 2.8-2.5 | 2.1-4.2 | 57-17.7 |
| 10'-0" | 6'-0" | 1'-3" | 1'-9" | 4'-3" | 1/2":12" | 9" | #4 | 1'-6" | 6'-8" | #4 | 4'-3" | #4 | 3'-6" | #4 | 2'-5" | #4 | #6 | 10'-10" | 14'-8" | – | – | – | – | – | #4 | 1'-0" | #4 | 1'-0" | 3.2-3.1 | 2.6-5.3 | 79-22.1 |
| 12'-0" | 6'-9" | 1'-6" | 2'-3" | 4'-6" | 1/2":12" | 9" | #4 | 1'-6" | 7'-2" | #4 | 4'-5" | #4 | 3'-8" | #4 | 2'-11" | #4 | #7 | 12'-10" | 17'-6" | – | – | – | – | – | #4 | 1'-0" | #4 | 1'-0" | 3.5-3.7 | 2.7-6.5 | 105-27.7 |
| 14'-0" | 8'-3" | 1'-8" | 2'-6" | 5'-9" | 5/8":12" | 9" | #4 | 1'-6" | 7'-7" | #6 | 6'-3" | #4 | 4'-8" | #4 | 3'-2" | #4 | #8 | 14'-10" | 20'-2" | #8 | 10'-3" | 14'-2" | – | – | #5 | 1'-0" | #4 | 1'-0" | 4.7-4.0 | 3.9-6.5 | 141-35.5 |
| 16'-0" | 9'-6" | 1'-8" | 3'-0" | 6'-6" | 5/8":12" | 6" | #4 | 1'-6" | 7'-6" | #7 | 7'-3" | #4 | 5'-4" | #4 | 3'-8" | #4 | #8 | 16'-10" | 22'-10" | #8 | 9'-6" | 14'-0" | – | – | #5 | 1'-0" | #4 | 1'-0" | 5.9-4.0 | 5.0-6.4 | 208-41.2 |
| 18'-0" | 10'-9" | 1'-10" | 3'-6" | 7'-3" | 5/8":12" | 6" | #4 | 1'-6" | 7'-10" | #7 | 7'-11" | #4 | 6'-0" | #4 | 4'-2" | #5 | #9 | 18'-10" | 25'-7" | #9 | 10'-11" | 16'-1" | – | – | #5 | 1'-0" | #4 | 1'-0" | 6.9-4.3 | 6.0-6.7 | 278-48.9 |
| 20'-0" | 12'-6" | 2'-0" | 3'-9" | 8'-9" | 5/8":12" | 6" | #4 | 1'-6" | 8'-2" | #8 | 9'-8" | #4 | 7'-4" | #4 | 4'-5" | #5 | #10 | 20'-10" | 28'-1" | #10 | 13'-1" | 18'-6" | – | – | #5 | 1'-0" | #4 | 1'-0" | 8.8-4.4 | 7.8-6.7 | 370-58.2 |
| 22'-0" | 13'-9" | 2'-0" | 4'-3" | 9'-6" | 5/8":12" | 6" | #4 | 1'-6" | 8'-2" | #9 | 11'-1" | #4 | 8'-0" | #4 | 4'-11" | #5 | #10 | 20'-6" | 28'-4" | #10 | 15'-1" | 21'-2" | #5 | 16'-10" | #5 | 1'-0" | #4 | 1'-0" | 10.3-4.5 | 9.4-6.6 | 433-64.9 |
| 24'-0" | 15'-6" | 2'-0" | 5'-0" | 10'-6" | 5/8":12" | 6" | #4 | 1'-6" | 8'-2" | #10 | 12'-11" | #4 | 8'-11" | #4 | 5'-8" | #5 | #8 | 21'-3" | 29'-11" | #8 | 12'-6" | 19'-5" | #5 | 18'-2" | #5 | 1'-0" | #4 | 1'-0" | 12.7-4.3 | 11.8-6.3 | 534-72.8 |
| 26'-0" | 17'-0" | 2'-0" | 5'-3" | 11'-9" | 3/4":12" | 6" | #4 | 1'-6" | 8'-2" | 2x#9 | 12'-10" | #4 | 9'-9" | #4 | 5'-11" | #5 | #8 | 21'-7" | 30'-10" | #8 | 13'-2" | 20'-9" | #6 | 19'-10" | #6 | 1'-0" | #5 | 1'-0" | 14.5-4.5 | 13.6-6.5 | 664-84.2 |

State of Alaska DOT&PF
ALASKA STANDARD PLAN

CANTILEVER RETAINING WALL TYPE III

Adopted as an Alaska Standard Plan by: Carolyn Morehouse
Carolyn Morehouse, P.E.
Chief Engineer

Adoption Date: 07/17/2020

Last Code and Stds. Review
By: NWM Date: 7/17/20

Next Code and Standards Review date: 07/17/2030

DESIGNED BY: NWM CHECKED BY: BAS DRAWN BY: MCM

# B-06.10HS

SHEET | of |

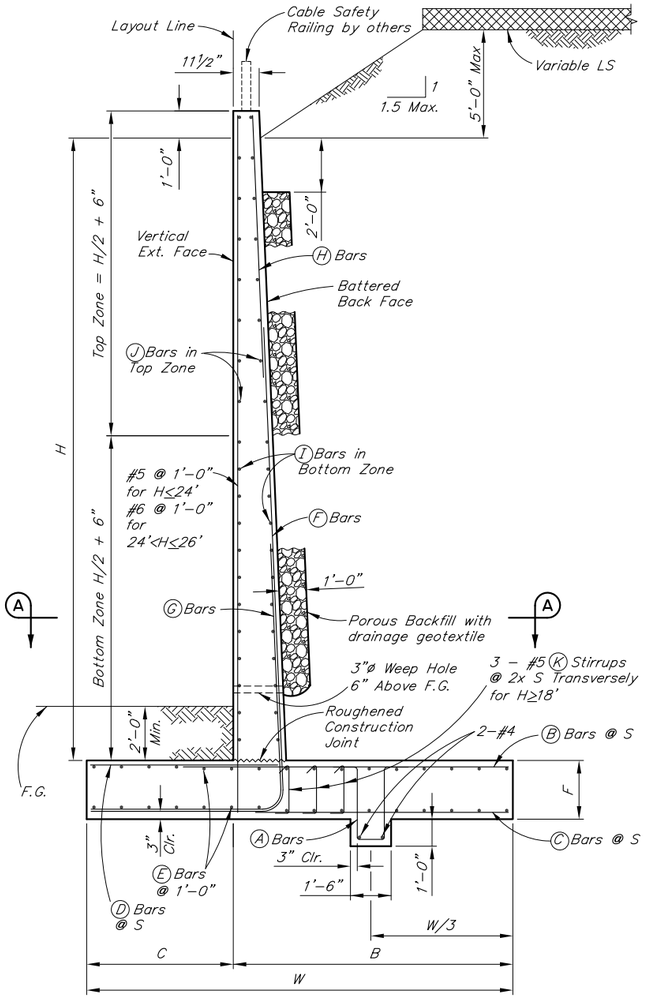


TYPICAL SECTION

No Scale

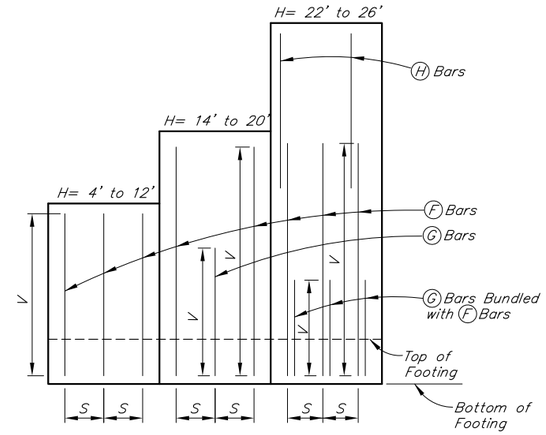


BACK FACE ELEVATION

No Scale

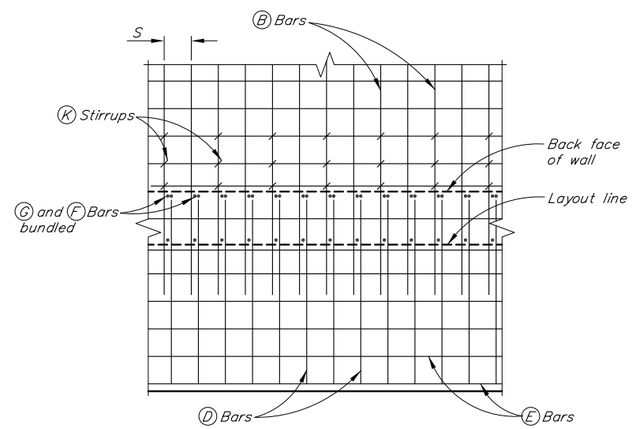


SECTION A-A

No Scale

## GENERAL NOTES

DESIGN:.....AASHTO LRFD Bridge Design Specifications, 2017 Edition, with latest interim specifications.

LIVE LOAD SURCHARGE:.....Up to 2' of fill on level ground surface.

ADDITIONAL DEAD LOAD:.....Up to 2" Non-Structural Concrete on exterior face included.

SEISMIC PARAMETERS:.....$0.40g < A_s \leq 0.60g$

FOUNDATION SOIL:.....$\phi \geq 28°$; Special footing design is required where foundation material is incapable of supporting bearing stress listed in the table.

RETAINED SOIL:.....$32° \leq \phi \leq 36°$
$120\ pcf \leq \gamma \leq 140\ pcf$

REINFORCED CONCRETE:.....Class A Concrete, f'c = 4,000 psi

REINFORCEMENT:.....ASTM A706 or A615, Grade 60, Fy = 60,000 psi

LOAD COMBINATIONS AND LIMIT STATES:.....
Service I = 1.0DC +1.0EV +1.0EH +1.0LS
Strength I = $\alpha$DC +$\beta$EV +$\eta$EH +1.75LS
Extreme I = 1.0DC +1.0EV +1.0EH +1.0EQD +1.0EQE

Where:
$\alpha$:.....1.25 or 0.90, Whichever Controls Design
$\beta$:.....1.35 or 1.00, Whichever Controls Design
$\eta$:.....1.50 or 0.90, Whichever Controls Design
DC:.....Dead Load of Structure Components
EH:.....Horizontal Earth Fill Pressure
EV:.....Vertical Earth Pressure from Earth Fill Weight
EQE:.....Seismic Earth Pressure
EQD:.....Soil and Structural and Nonstructural Components Inertia
LS:.....Live Load Surcharge

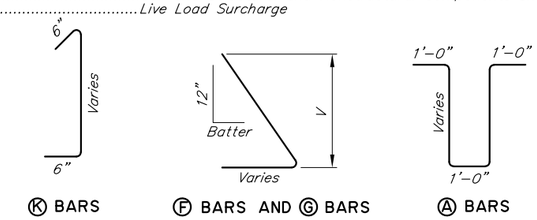


See "B-07.10" for details not shown

## ABBREVIATIONS:

Ser I – Service I limit state
Str I – Strength I limit state
Ext I – Extreme event I limit state
B' – Effective footing width (ft)
qo – Gross uniform bearing stress (ksf)
F.G. – Finished grade

## TABLE OF DIMENSIONS, REINFORCING STEEL, AND DATA

| DIMENSIONS | | | | | | | Ⓐ BARS | | | Ⓑ BARS | | Ⓒ BARS | | Ⓓ BARS | | Ⓔ BARS | Ⓕ BARS | | | Ⓖ BARS | | | Ⓗ BARS | | Ⓘ BARS | | Ⓙ BARS | | EFFECTIVE FOOTING WIDTHS AND BEARING PRESSURES | | | Steel (Lbs/ft) Concrete (CF/ft) |
|---|---|---|---|---|---|---|---|---|---|---|---|---|---|---|---|---|---|---|---|---|---|---|---|---|---|---|---|---|---|---|---|---|
| H | W | F | C | B | Batter | Spacing S | Size | Spacing | Length | Size | Length | Size | Length | Size | Length | Size | Size | V | Length | Size | V | Length | Size | Length | Size | Spacing | Size | Spacing | Ser I B'-qo | Str I B'-qo | Ext I B'-qo | |
| 4'-0" | 4'-0" | 1'-0" | 1'-3" | 2'-9" | 1/2":12" | 12" | #4 | 1'-6" | 6'-2" | #4 | 2'-8" | #4 | 2'-3" | #4 | 1'-11" | #4 | #4 | 4'-10" | 7'-8" | – | – | – | – | – | #4 | 1'-6" | #4 | 1'-6" | 2.9-1.2 | 2.6-1.8 | 1.4-3.2 | 30-10.9 |
| 6'-0" | 5'-6" | 1'-3" | 1'-9" | 3'-9" | 1/2":12" | 12" | #4 | 1'-6" | 6'-8" | #4 | 3'-11" | #4 | 3'-2" | #4 | 2'-5" | #4 | #6 | 6'-10" | 10'-6" | – | – | – | – | – | #4 | 1'-0" | #4 | 1'-6" | 4.2-1.5 | 3.7-2.2 | 2.2-3.5 | 51-16.2 |
| 8'-0" | 6'-6" | 1'-3" | 2'-0" | 4'-6" | 1/2":12" | 12" | #4 | 1'-6" | 6'-8" | #5 | 5'-0" | #4 | 3'-10" | #4 | 2'-8" | #4 | #6 | 8'-10" | 12'-10" | – | – | – | – | – | #4 | 1'-0" | #4 | 1'-6" | 4.9-1.9 | 4.3-2.8 | 2.4-4.4 | 63-20.0 |
| 10'-0" | 7'-6" | 1'-6" | 2'-3" | 5'-3" | 1/2":12" | 9" | #4 | 1'-6" | 7'-2" | #5 | 5'-8" | #4 | 4'-6" | #4 | 2'-11" | #4 | #7 | 10'-10" | 15'-5" | – | – | – | – | – | #4 | 1'-0" | #4 | 1'-0" | 5.4-2.4 | 4.8-3.6 | 2.6-5.7 | 100-25.9 |
| 12'-0" | 8'-6" | 1'-8" | 2'-9" | 5'-9" | 5/8":12" | 9" | #4 | 1'-6" | 7'-6" | #5 | 5'-11" | #4 | 4'-9" | #4 | 3'-5" | #4 | #8 | 12'-10" | 18'-4" | – | – | – | – | – | #4 | 1'-0" | #4 | 1'-0" | 6.1-2.7 | 5.4-4.2 | 2.9-6.6 | 131-32.6 |
| 14'-0" | 9'-6" | 1'-8" | 2'-9" | 6'-9" | 5/8":12" | 6" | #4 | 1'-6" | 7'-6" | #6 | 7'-3" | #4 | 5'-8" | #4 | 3'-5" | #4 | #8 | 14'-10" | 20'-5" | #8 | 8'-10" | 13'-0" | – | – | #5 | 1'-0" | #4 | 1'-0" | 6.6-3.3 | 5.9-5.0 | 3.4-7.4 | 185-37.6 |
| 16'-0" | 10'-6" | 1'-10" | 3'-3" | 7'-3" | 5/8":12" | 6" | #4 | 1'-6" | 7'-10" | #6 | 7'-7" | #4 | 6'-1" | #4 | 3'-11" | #5 | #9 | 16'-10" | 23'-3" | #9 | 10'-3" | 15'-0" | – | – | #5 | 1'-0" | #4 | 1'-0" | 7.3-3.6 | 6.5-5.5 | 3.7-8.1 | 243-44.6 |
| 18'-0" | 11'-6" | 2'-0" | 3'-6" | 8'-0" | 5/8":12" | 6" | #4 | 1'-6" | 8'-2" | #7 | 8'-8" | #4 | 6'-9" | #4 | 4'-2" | #5 | #10 | 18'-10" | 25'-9" | #10 | 11'-10" | 16'-11" | – | – | #5 | 1'-0" | #4 | 1'-0" | 7.9-4.1 | 7.0-6.3 | 4.1-8.9 | 327-52.2 |
| 20'-0" | 12'-9" | 2'-0" | 4'-0" | 8'-9" | 3/4":12" | 6" | #4 | 1'-6" | 8'-2" | #8 | 9'-6" | #4 | 7'-2" | #4 | 4'-8" | #5 | #10 | 20'-10" | 28'-7" | #10 | 12'-6" | 18'-5" | – | – | #5 | 1'-0" | #4 | 1'-0" | 9.2-4.3 | 8.2-6.5 | 5.2-8.4 | 371-61.0 |
| 22'-0" | 14'-0" | 2'-0" | 4'-3" | 9'-9" | 3/4":12" | 6" | #4 | 1'-6" | 8'-2" | #9 | 11'-1" | #4 | 8'-0" | #4 | 4'-11" | #5 | #8 | 17'-7" | 25'-7" | #8 | 11'-10" | 18'-2" | #6 | 17'-2" | #5 | 1'-0" | #5 | 1'-0" | 10.7-4.4 | 9.8-6.5 | 6.2-8.4 | 472-68.1 |
| 24'-0" | 16'-0" | 2'-2" | 5'-0" | 11'-0" | 3/4":12" | 6" | #4 | 1'-6" | 8'-6" | #10 | 13'-2" | #4 | 9'-2" | #4 | 5'-8" | #5 | #9 | 20'-9" | 29'-11" | #9 | 13'-3" | 20'-5" | #6 | 18'-6" | #5 | 1'-0" | #5 | 1'-0" | 13.5-4.3 | 12.6-6.2 | 8.5-7.4 | 633-79.7 |
| 26'-0" | 17'-6" | 2'-2" | 5'-3" | 12'-3" | 7/8":12" | 6" | #4 | 1'-6" | 8'-6" | 2x#9 | 13'-1" | #4 | 10'-0" | #4 | 5'-11" | #5 | #9 | 20'-1" | 29'-10" | #9 | 13'-11" | 21'-9" | #7 | 20'-2" | #6 | 1'-0" | #5 | 1'-0" | 15.2-4.5 | 14.4-6.4 | 10.0-7.4 | 755-91.9 |

State of Alaska DOT&PF
ALASKA STANDARD PLAN

CANTILEVER RETAINING WALL
TYPE III – HIGH SEISMIC

Adopted as an Alaska Standard Plan by: Carolyn Morehouse
Carolyn Morehouse, P.E.
Chief Engineer

Adoption Date: 07/17/2020

Last Code and Stds. Review
By: NWM Date: 7/17/20

Next Code and Standards Review date: 07/17/2030

DESIGNED BY: NWM CHECKED BY: BAS DRAWN BY: MCM

B-06.10HS

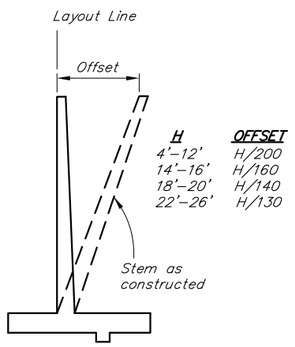


FORM OFFSETS

No Scale

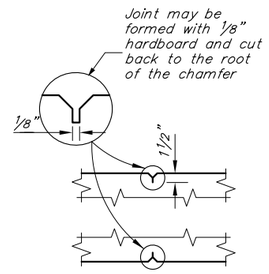


WEAKENED PLANE JOINT

No Scale

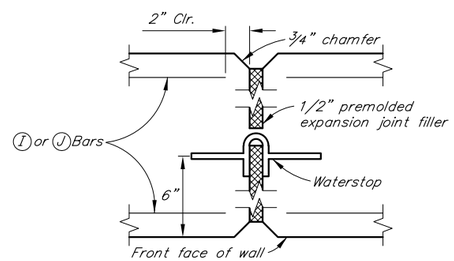


EXPANSION JOINT

No Scale

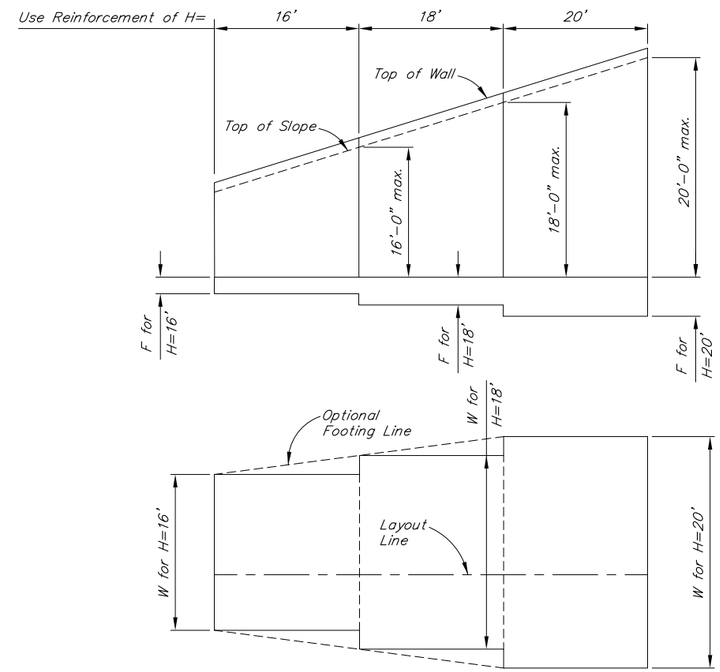


TYPICAL LAYOUT EXAMPLE

No Scale

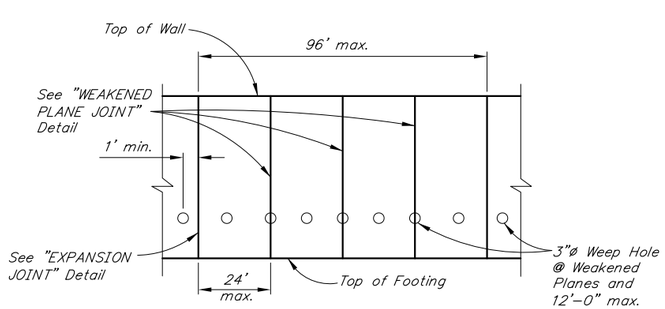


WALL EXPANSION JOINT AND WEAKENED PLANES

No Scale

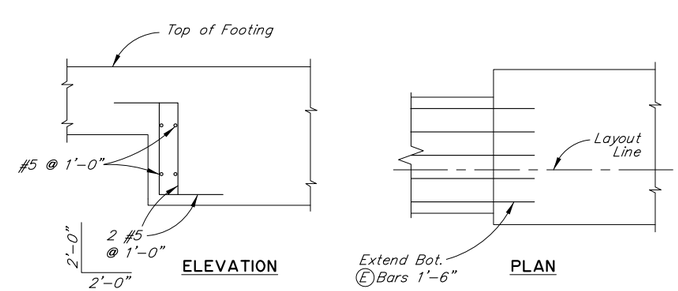


FOOTING STEP FOR WALL HEIGHT CHANGE

No Scale

State of Alaska DOT&PF
ALASKA STANDARD PLAN

CANTILEVER RETAINING WALL DETAILS

Adopted as an Alaska Standard Plan by: Carolyn Morehouse
Carolyn Morehouse, P.E.
Chief Engineer

Adoption Date: 07/17/2020

Last Code and Stds. Review
By: NWM Date: 7/17/20

Next Code and Standards Review date: 07/17/2030

DRAWN BY: MCM
CHECKED BY: BAS
DESIGNED BY: NWM

# B-08.00

SHEET | of |

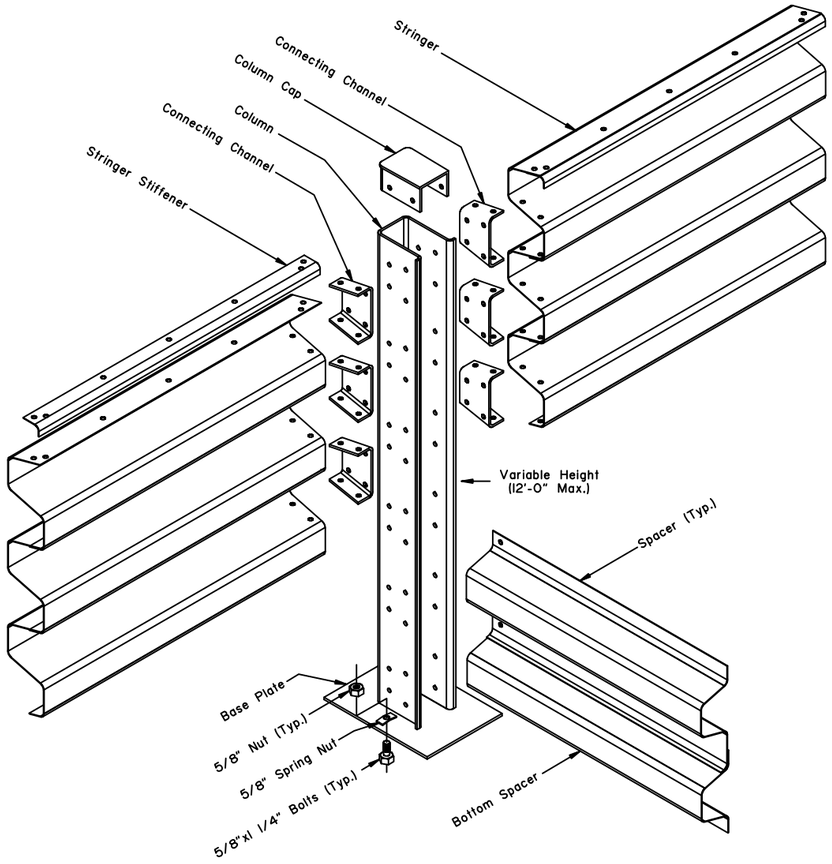


BIN WALL
ASSEMBLY DETAILS

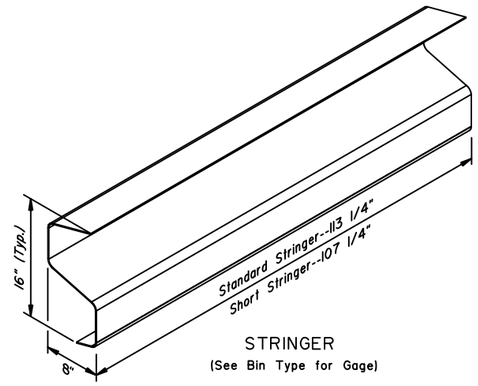


STRINGER
(See Bin Type for Gage)

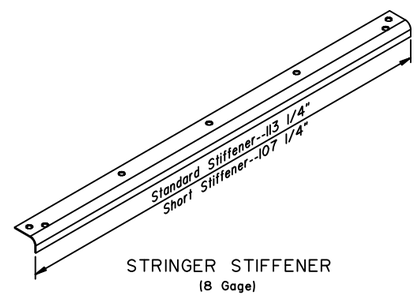


STRINGER STIFFENER
(8 Gage)

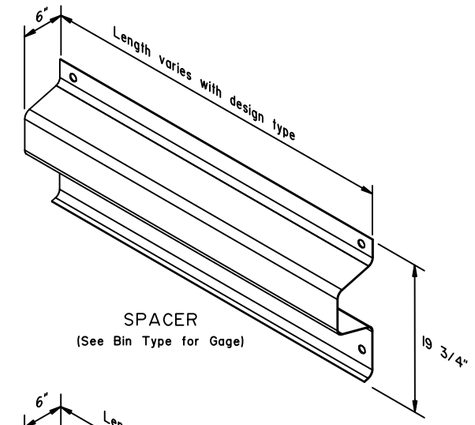


SPACER
(See Bin Type for Gage)

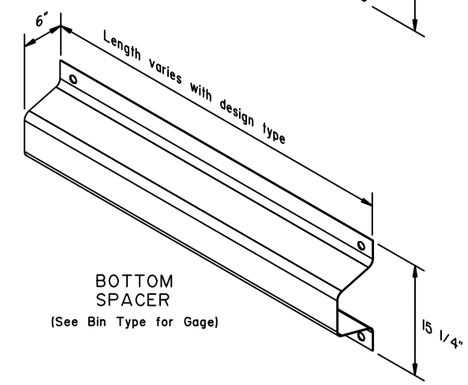


BOTTOM
SPACER
(See Bin Type for Gage)

## GENERAL NOTES:

1. Units shall be fabricated in accordance with AASHTO M-36 or M-218.
2. Installation procedure shall follow the manufacturers' recommendation for erecting bin walls.

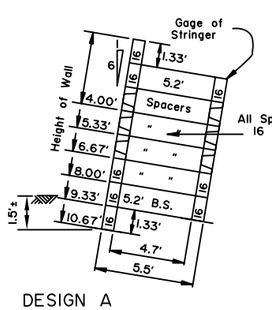


DESIGN A

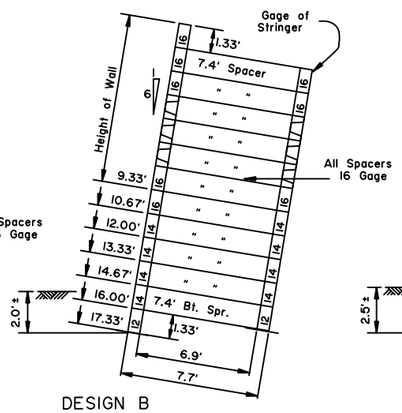


DESIGN B

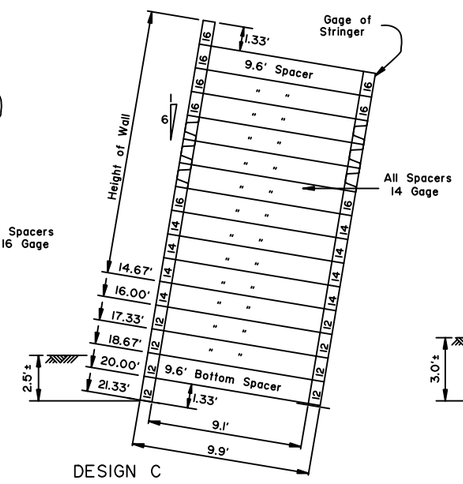


DESIGN C

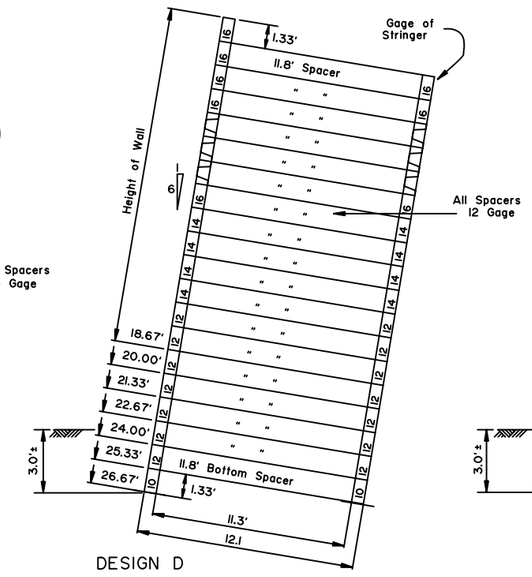


DESIGN D

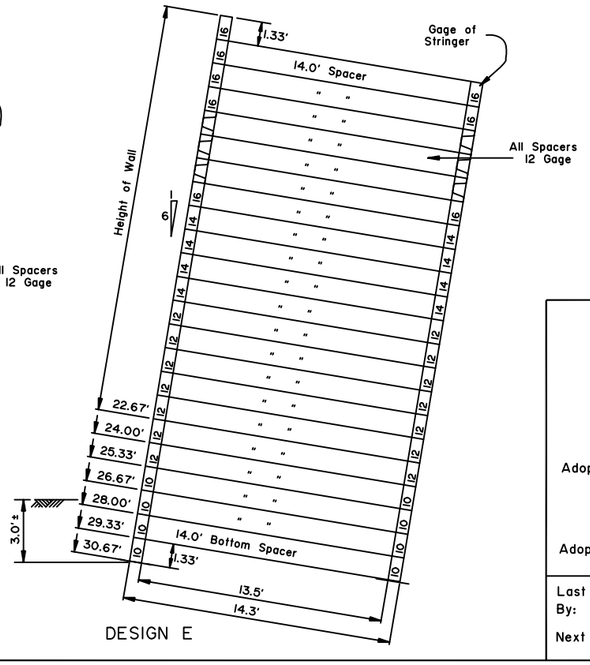


DESIGN E

State of Alaska DOT&PF
ALASKA STANDARD PLAN

**BIN WALLS**

Adopted as an Alaska Standard Plan by:
Kenneth J. Fisher, P.E.
Chief Engineer

Adoption Date: 02/08/2019

Last Code and Stds. Review
By: Date:

Next Code and Standards Review date: 02/08/2029

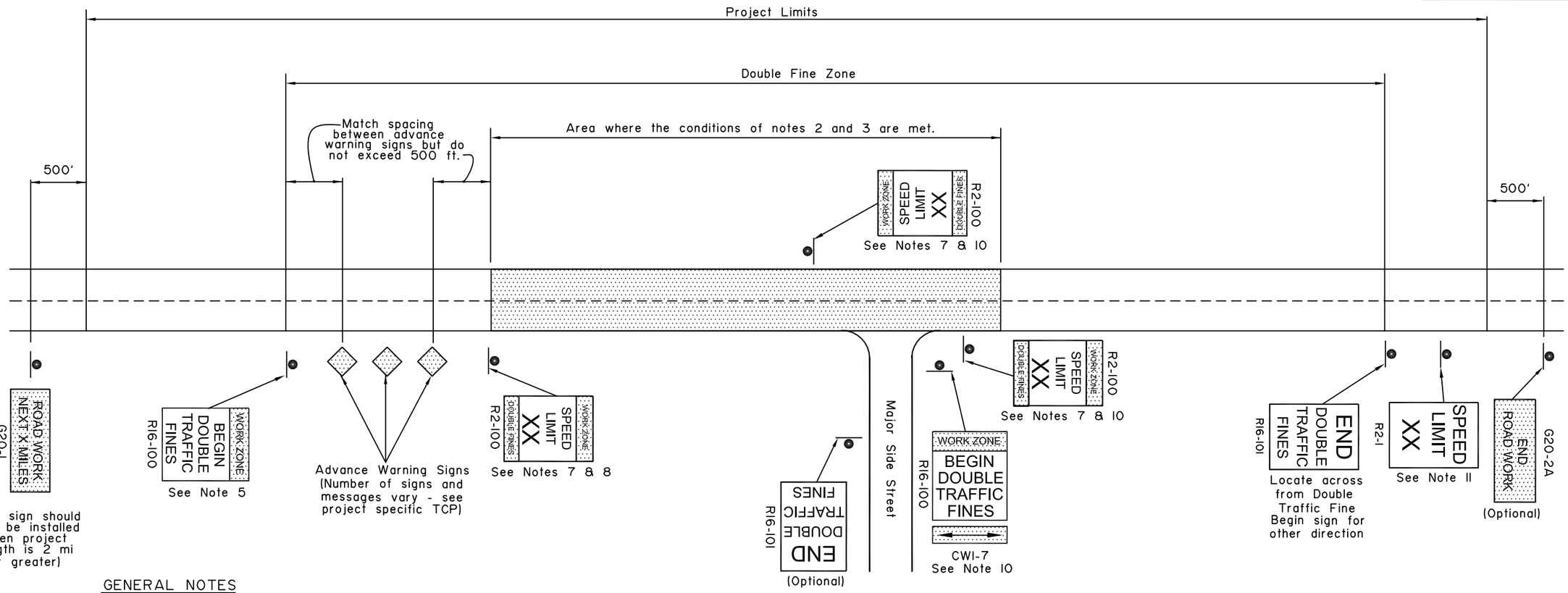


## GENERAL NOTES

1. Signs are shown for one direction only (with one exception). Signs for the other direction mirror those shown.

2. Double fine signs shall be used only where one or more of the following conditions exist:
   a. Active work areas (where road workers and/or machines are presently working on or adjacent to a road)
   b. Detours on new temporary roads built for that purpose (this does not include detours on existing streets)
   c. Sections of paved roads where pavement has been removed.
   d. Roads being paved where unmatched asphalt lifts result in a vertical lip between lanes.

3. Double fine signs shall be confined to the areas where the above conditions exist, with the following exceptions:
   a. If the project is 2 miles or shorter in length, the entire project may be posted for double fines when the above conditions exist on any part of the project.
   b. When the above conditions exist at multiple locations separated by less than 2 miles, the locations and the intervening segments may be posted as a single double fine zone.

4. Double fine signs shall be removed or covered when work activity ceases for more than two days and conditions b, c, or d of note 2 are not met.

5. The R16-100 "BEGIN" sign may be used in place of the first advance warning sign. However, when this is done, the appropriate advance warning sign must be reinstalled when the double fine sign is taken down or covered.

6. When a double fine zone is longer than 2 miles, work zone speed limit signs shall be posted at spacings not greater than 2 miles within the double fine zone.

7. "Work zone speed limit signs", as used here, refer either to 1) R2-100 signs or 2) standard R2-1 regulatory speed limit signs with CW20-102 "DOUBLE FINES" plates mounted below.

8. The limit shown on work zone speed limit signs shall be either the existing limit before construction or, if a work zone speed limit order has been approved in accordance with ADOT&PF Procedure 05.05.020 PDR, a reduced limit.

9. All existing regulatory speed limit signs within double fine zones shall either be replaced with R2-100 signs or supplemented with CW20-102 plates.

10. Signs shall be installed at major intersections within the double fine zone to warn entering drivers of double fines. This may be done with a R16-100 sign with a CWI-7 arrow panel on the side street or with two work zone speed limit signs on the main street on either side of the intersection. Use of R16-100 signs on side streets eliminates the need for "Road Work Ahead" signs on those streets. If the speed limit has been reduced, the two work zone speed limit signs are mandatory.

11. At the end of each double fine zone, install an R2-1 sign showing the speed limit for the road beyond the double fine zone.

State of Alaska DOT&PF
ALASKA STANDARD PLAN

**LOCATION OF DOUBLE TRAFFIC FINE SIGNS**

Adopted as an Alaska Standard Plan by: Kenneth J. Fisher, P.E.
Chief Engineer

Adoption Date: 02/08/2019

Last Code and Stds. Review
By: Date:

Next Code and Standards Review date: 02/08/2029

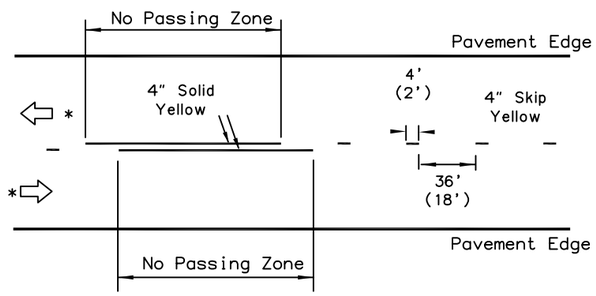


Striping

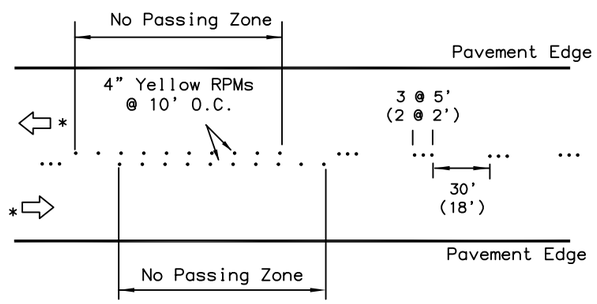


Temporary Raised Pavement Markers

## DETAIL A

Two-lane road: No Passing Zones indicated with pavement markings.

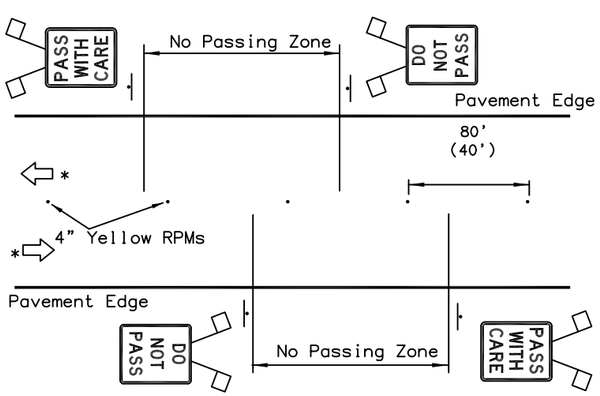


## DETAIL B

Two-lane road: No Passing Zones indicated by signs only. Raised pavement markers for centerline delineation.

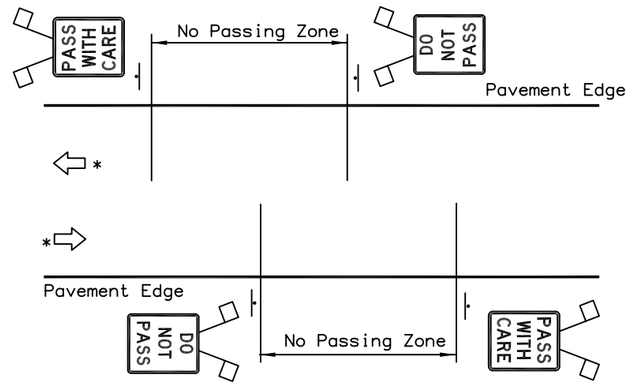


## DETAIL C

Two-lane road: No Passing Zones indicated by signs only (see Note 2c). No centerline delineation.

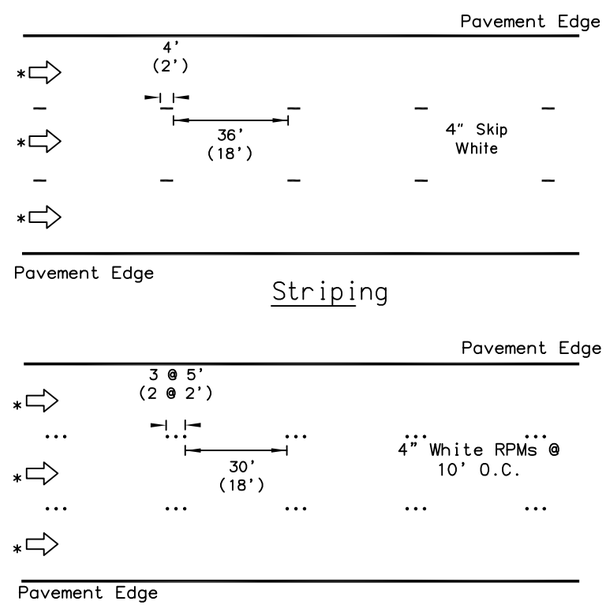


Temporary Raised Pavement Markers

## DETAIL D

Multilane one-way road: Lane dividing lines

* Direction of Travel

## GENERAL NOTES:

1. Final pavement markings conforming to Part 3 of the Alaska Traffic Manual should be installed before paved roads are open to public travel. If that is not practical, install interim pavement markings as shown on this drawing. Maintain interim pavement markings until final pavement markings are installed.

2. No interim pavement markings are required:
   a. on projects that will not have permanent markings when finished.
   b. in work zones that are open to public travel for no more than one work shift during daytime or for no more than one hour at night.
   c. where DO NOT PASS and PASS WITH CARE signs are installed on two lane roads as shown in Detail C, no pavement markings are required:
      1) for 3 days if seasonal ADT is above 2000, or
      2) for 1 month if seasonal ADT is below 2000.

3. Interim pavement markings should not be in place longer than 14 calendar days before being replaced with permanent markings conforming to Part 3 of the Alaska Traffic Manual unless the Engineer provides written approval.

4. Where R4-1 DO NOT PASS signs are used, install at the beginning of no passing zones and at no more than 1500' spacings within no passing zones.

5. Install high level warning devices on all DO NOT PASS and PASS WITH CARE signs.

6. Offset temporary markings 8"-12" from the future location of permanent markings if applied on the same lift of pavement.

7. Dimensions in parenthesis apply to curves with a radius of 1000 feet or less or where posted speed limit is 30 mph or less.

State of Alaska DOT&PF
ALASKA STANDARD PLAN

**INTERIM PAVEMENT MARKINGS**

Adopted as an Alaska Standard Plan by: Kenneth J. Fisher, P.E.
Chief Engineer

Adoption Date: 02/08/2019

Last Code and Stds. Review
By: Date:

Next Code and Standards Review date: 02/08/2029

# D-01.02

SHEET 1 of 1

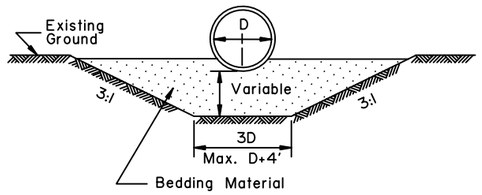


TYPE "A"
FOUNDATION STABILIZATION

To be used in unstable areas as directed by the Engineer.

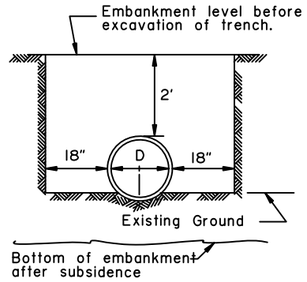


TYPE "B"

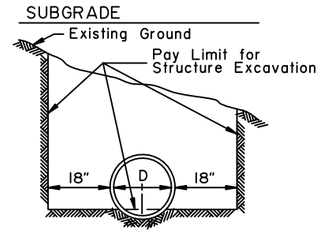


TYPE "C"

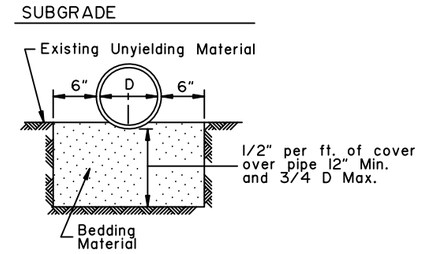


TYPE "D"
ROCK OR UNYIELDING MATERIAL

## GENERAL NOTES:

1. Sidefill shall be placed and compacted with care under haunches of pipe and shall be brought up evenly and simultaneously on both sides of pipe to 1 foot above the top of the full length of the pipe.
2. Alternate installation methods may only be used when specified or approved by the Engineer.

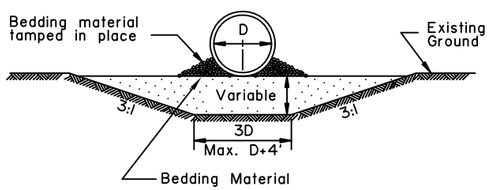


'ALTERNATE'
TYPE "A"
FOUNDATION STABILIZATION

To be used in unstable areas as directed by the Engineer.

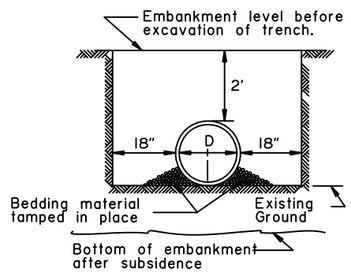


'ALTERNATE'
TYPE "B"

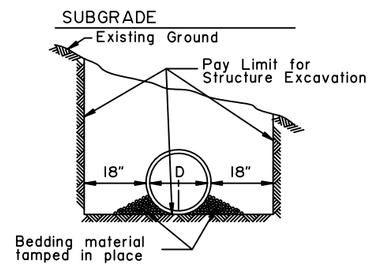


'ALTERNATE'
TYPE "C"

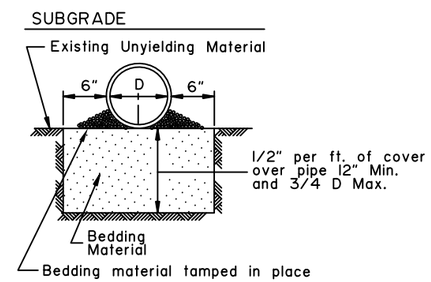


'ALTERNATE' TYPE "D"
ROCK OR UNYIELDING MATERIAL

D = Nominal Pipe Diameter

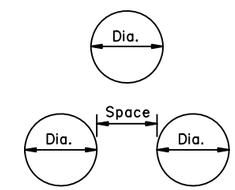


| MULTIPLE INSTALLATIONS | |
|---|---|
| Dia. | Minimum Space Between Pipes |
| 0" - 42" | 24" |
| 48" & Over | 1/2 Dia. of pipe or 3', whichever is less. |

S = Nominal Pipe Arch Span

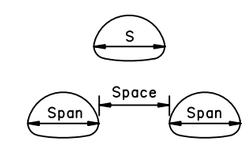


| MULTIPLE INSTALLATIONS | |
|---|---|
| Dia. | Minimum Space Between Pipes |
| 0" - 42" | 24" |
| 48" & Over | 1/2 Span of pipe arch or 3', whichever is less. |

## CULVERT PIPE

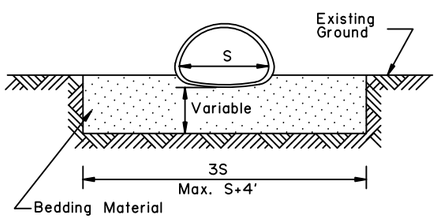


TYPE "A"
FOUNDATION STABILIZATION

To be used in unstable areas as directed by the Engineer.

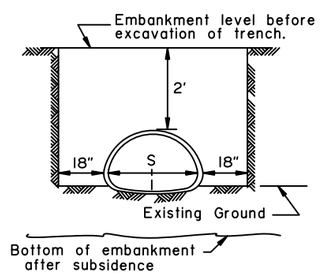


TYPE "B"

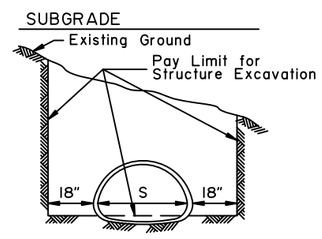


TYPE "C"

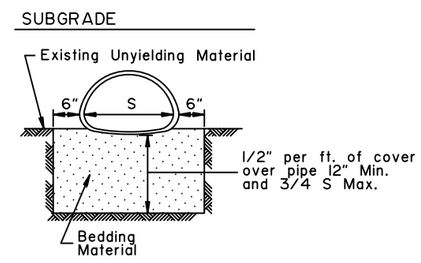


TYPE "D"
ROCK OR UNYIELDING MATERIAL

## ARCH

State of Alaska DOT&PF
ALASKA STANDARD PLAN

**CULVERT PIPE & ARCH INSTALLATION DETAILS**

Adopted as an Alaska Standard Plan by: Kenneth J. Fisher, P.E.
Chief Engineer

Adoption Date: 02/08/2019

Last Code and Stds. Review
By: Date:

Next Code and Standards Review date: 02/08/2029

D-01.02

| Minimum & Maximum Cover for 2 2/3"X 1/2" Aluminum Pipe | | | | | | |
|---|---|---|---|---|---|---|
| Gage | | 16 | 14 | 12 | 10 | 8 |
| Thickness | | 0.060 | 0.075 | 0.105 | 0.135 | 0.164 |
| Dia. (In) | Min. (In) | Max. (Ft) | Max. (Ft) | Max. (Ft) | Max. (Ft) | Max. (Ft) |
| 12 | 12 | 100+ | 100+ | 100+ | 100+ | 100+ |
| 15 | 12 | 100 | 100+ | 100+ | 100+ | 100+ |
| 18 | 12 | 83 | 100+ | 100+ | 100+ | 100+ |
| 21 | 12 | 71 | 89 | 100+ | 100+ | 100+ |
| 24 | 12 | 62 | 78 | 100+ | 100+ | 100+ |
| 27 | 12 | | 69 | 97 | 100+ | 100+ |
| 30 | 12 | | 62 | 87 | 100+ | 100+ |
| 36 | 12 | | 51 | 73 | 94 | 100+ |
| 42 | 12 | | | 62 | 80 | 100+ |
| 48 | 12 | | | 54 | 70 | 85 |
| 54 | 15 | | | 48 | 62 | 76 |
| 60 | 15 | | | | 52 | 64 |
| 66 | 18 | | | | | 52 |
| 72 | 18 | | | | | 43 |

| Minimum & Maximum Cover for 3" x 1" Aluminum Pipe | | | | | | |
|---|---|---|---|---|---|---|
| Gage | | 16 | 14 | 12 | 10 | 8 |
| Thickness | | 0.060 | 0.075 | 0.105 | 0.135 | 0.164 |
| Dia. (In) | Min. (In) | Max. (Ft) | Max. (Ft) | Max. (Ft) | Max. (Ft) | Max. (Ft) |
| 30 | 12 | 57 | 72 | 100+ | 100+ | 100+ |
| 36 | 12 | 47 | 60 | 84 | 100+ | 100+ |
| 42 | 12 | 40 | 51 | 72 | 96 | 100+ |
| 48 | 12 | 35 | 44 | 62 | 84 | 99 |
| 54 | 15 | 31 | 39 | 55 | 74 | 88 |
| 60 | 15 | 28 | 35 | 50 | 67 | 79 |
| 66 | 18 | 25 | 32 | 45 | 61 | 72 |
| 72 | 18 | 23 | 29 | 41 | 56 | 66 |
| 78 | 21 | | 27 | 38 | 51 | 61 |
| 84 | 21 | | | 35 | 48 | 56 |
| 90 | 24 | | | 33 | 44 | 52 |
| 96 | 24 | | | 31 | 41 | 49 |
| 102 | 24 | | | | 39 | 46 |
| 108 | 24 | | | | 37 | 43 |
| 114 | 24 | | | | | 39 |
| 120 | 24 | | | | | 36 |

| Minimum & Maximum Cover for 9" X 2 1/2" Aluminum Structural Plate Pipe* | | | |
|---|---|---|---|
| Thickness | | 0.125 | 0.150 |
| Dia. (In) | Min. (In) | Max. (Ft) | Max. (Ft) |
| 84 | 18 | 31 | |
| 90 | 18 | 27 | |
| 96 | 18 | 27 | |
| 102 | 18 | 24 | |
| 108 | 18 | 24 | |
| 114 | 18 | 21 | |
| 120 | 24 | 21 | |
| 126 | 24 | 19 | |
| 132 | 30 | 19 | |
| 138 | 30 | 18 | |
| 144 | 30 | 18 | |
| 150 | 30 | | 22 |
| 156 | 30 | | 22 |
| 162 | 36 | | 20 |
| 168 | 36 | | 20 |

*5.33 - 3/4" dia. steel bolts per foot.

## CORRUGATED CIRCULAR ALUMINUM PIPE

## CORRUGATED ALUMINUM PIPE-ARCH

| Minimum & Maximum Cover for 2 2/3"X 1/2" Aluminum Pipe-Arch | | | | | |
|---|---|---|---|---|---|
| | | | | 2 Tons/Sf Corner Bearing Pressure | |
| Span (Ft.-In.) | Rise (Ft.-In.) | Corner Radius (In) | Min. Thickness (In) | Min. Cover (In) | Max. Cover (Ft) |
| 17 | 13 | 3 4/8 | 16 (0.060) | 12 | 13 |
| 21 | 15 | 4 1/8 | 16 (0.060) | 12 | 12 |
| 24 | 18 | 4 7/8 | 16 (0.060) | 12 | 12 |
| 28 | 20 | 5 4/8 | 14 (0.075) | 12 | 12 |
| 35 | 24 | 6 7/8 | 14 (0.075) | 12 | 12 |
| 42 | 29 | 8 2/8 | 12 (0.105) | 12 | 12 |
| 49 | 33 | 9 5/8 | 12 (0.105) | 15 | 12 |
| 57 | 38 | 11 | 10 (0.135) | 15 | 12 |
| 64 | 43 | 12 3/8 | 10 (0.135) | 18 | 12 |
| 71 | 47 | 13 6/8 | 8 (0.164) | 18 | 12 |

| Minimum & Maximum Cover for 3" x 1" Aluminum Pipe-Arch | | | | | |
|---|---|---|---|---|---|
| | | | | 2 Tons/Sf Corner Bearing Pressure | |
| Span (Ft.-In.) | Rise (Ft.-In.) | Corner Radius (In) | Min. Thickness (In) | Min. Cover (In) | Max. Cover (Ft) |
| 60 | 46 | 18 6/8 | 14 (0.075) | 15 | 20 |
| 66 | 51 | 20 6/8 | 14 (0.075) | 18 | 20 |
| 73 | 55 | 22 7/8 | 14 (0.075) | 21 | 20 |
| 81 | 59 | 20 7/8 | 12 (0.105) | 21 | 16 |
| 87 | 63 | 22 7/8 | 12 (0.105) | 24 | 16 |
| 95 | 67 | 24 3/8 | 12 (0.105) | 24 | 16 |
| 103 | 71 | 26 1/8 | 10 (0.135) | 24 | 16 |
| 112 | 75 | 27 6/8 | 8 (0.164) | 24 | 16 |

| Minimum & Maximum Cover for 9" x 2 1/2" Aluminum Multiplate Pipe-Arch* | | | | | |
|---|---|---|---|---|---|
| Span (Ft.-In.) | Rise (Ft.-In.) | Corner Radius (In) | Min. Thickness (In) | Min. Cover (In) | 2 Tons/Sf Corner Bearing Pressure Max. Cover (Ft) |
| 6-7 | 5-8 | 31.75 | 0.125 | 24 | 24 |
| 6-11 | 5-9 | 31.75 | 0.125 | 24 | 24 |
| 7-3 | 5-11 | 31.75 | 0.125 | 24 | 18 |
| 7-9 | 6-0 | 31.75 | 0.125 | 24 | 18 |
| 8-5 | 6-3 | 31.75 | 0.125 | 24 | 16 |
| 9-3 | 6-5 | 31.75 | 0.125 | 24 | 15 |
| 10-3 | 6-9 | 31.75 | 0.125 | 30 | 13 |
| 10-9 | 6-10 | 31.75 | 0.125 | 30 | 13 |
| 11-5 | 7-1 | 31.75 | 0.125 | 30 | 13 |
| 12-7 | 7-5 | 31.75 | 0.125 | 30 | 11 |
| 12-11 | 7-6 | 31.75 | 0.125 | 30 | 11 |
| 13-1 | 8-2 | 31.75 | 0.125 | 30 | 11 |
| 13-11 | 8-5 | 31.75 | 0.125 | 36 | 10 |
| 14-8 | 9-8 | 31.75 | 0.125 | 36 | 9 |
| 15-4 | 10-0 | 31.75 | 0.150 | 36 | 8 |
| 16-1 | 10-4 | 31.75 | 0.150 | 36 | 8 |
| 16-9 | 10-8 | 31.75 | 0.150 | 42 | 7 |
| 17-3 | 11-0 | 31.75 | 0.150 | 42 | 7 |
| 18-0 | 11-4 | 31.75 | 0.175 | 42 | 7 |
| 18-8 | 11-8 | 31.75 | 0.175 | 42 | 7 |

*5.33 - 3/4" dia. steel bolts per foot.

## GENERAL NOTES:

1. All material and workmanship shall be in accordance with the State of Alaska, Standard Specifications for Highway Construction.
2. The contractor shall select only pipes that meet specific height of cover criteria shown on the plans or in the special provisions.
3. No more than one type of pipe may be used on any single installation or installation grouping.
4. All structural plate pipes shall be placed on a pre-shaped foundation conforming to the depth of the bottom plates with clearance for assembling to the adjacent plates allowed.
5. See Standard Plan D-01 "Culvert Pipe & Arch Installation Details" for foundation and structural backfill details.
6. Minimum cover shall be measured from the top of pipe to the top of rigid pavement or to the bottom of flexible pavement subgrade. In all cases, the minimum cover shall not be less than 12". Minimum cover during construction shall be that required to protect the pipe from damage or deflection.
7. These tables have been developed for an HL-93 live load and for compacted soil weighing 120 lbs. per cubic foot or less. If compacted soil cover exceeds 120 lbs. per cubic foot, the contractor shall use the depth of cover shown in the plans for the specific pipe. Where compacted soil cover exceeds 120 lbs. per cubic foot and no specific cover requirements are provided in the plans, the contractor shall determine the required minimum pipe cover in accordance with Section 12 of the 2017 AASHTO "LRFD Bridge Design Specifications".

State of Alaska DOT&PF
ALASKA STANDARD PLAN

**PIPE AND ARCH TABLES**

Adopted as an Alaska Standard Plan by: Carolyn Morehouse
Carolyn Morehouse, P.E.
Chief Engineer

Adoption Date: 7/17/2020

Last Code and Stds. Review
By: KLH Date: 7/8/2020

Next Code and Standards Review date: 7/8/2030

| Minimum & Maximum Cover for 2 2/3" x 1/2" Steel Pipe | | | | | | |
|---|---|---|---|---|---|---|
| Gage | | 16 | 14 | 12 | 10 | 8 |
| Thickness | | 0.060 | 0.075 | 0.105 | 0.135 | 0.164 |
| Dia. (In) | Min. (In) | Max. (Ft) | Max. (Ft) | Max. (Ft) | Max. (Ft) | Max. (Ft) |
| 12 | 12 | 100+ | 100+ | 100+ | 100+ | 100+ |
| 15 | 12 | 100+ | 100+ | 100+ | 100+ | 100+ |
| 18 | 12 | 100+ | 100+ | 100+ | 100+ | 100+ |
| 21 | 12 | 100+ | 100+ | 100+ | 100+ | 100+ |
| 24 | 12 | 100+ | 100+ | 100+ | 100+ | 100+ |
| 30 | 12 | 83 | 100+ | 100+ | 100+ | 100+ |
| 36 | 12 | 69 | 86 | 100+ | 100+ | 100+ |
| 42 | 12 | 59 | 74 | 100+ | 100+ | 100+ |
| 48 | 12 | 51 | 64 | 91 | 100+ | 100+ |
| 54 | 12 | | 57 | 80 | 100+ | 100+ |
| 60 | 12 | | | 72 | 93 | 100+ |
| 66 | 12 | | | 66 | 85 | 100+ |
| 72 | 12 | | | | 78 | 95 |
| 78 | 12 | | | | | 84 |
| 84 | 12 | | | | | 73 |

| Minimum & Maximum Cover fo 3" x 1" Steel Pipe | | | | | | |
|---|---|---|---|---|---|---|
| Gage | | 16 | 14 | 12 | 10 | 8 |
| Thickness | | 0.060 | 0.075 | 0.105 | 0.135 | 0.164 |
| Dia. (In) | Min. (In) | Max. (Ft) | Max. (Ft) | Max. (Ft) | Max. (Ft) | Max. (Ft) |
| 36 | 12 | | | 100+ | 100+ | 100+ |
| 42 | 12 | | | 100+ | 100+ | 100+ |
| 48 | 12 | | 74 | 100+ | 100+ | 100+ |
| 54 | 12 | 53 | 66 | 93 | 100+ | 100+ |
| 60 | 12 | 47 | 59 | 83 | 100+ | 100+ |
| 66 | 12 | 43 | 54 | 76 | 98 | 100+ |
| 72 | 12 | 39 | 49 | 69 | 89 | 100+ |
| 78 | 12 | 36 | 45 | 64 | 82 | 100+ |
| 84 | 12 | 33 | 42 | 59 | 77 | 94 |
| 90 | 12 | 31 | 39 | 55 | 71 | 87 |
| 96 | 12 | 29 | 37 | 52 | 67 | 82 |
| 102 | 18 | 27 | 34 | 49 | 63 | 77 |
| 108 | 18 | | 32 | 46 | 59 | 73 |
| 114 | 18 | | 31 | 43 | 56 | 69 |
| 120 | 18 | | 29 | 41 | 53 | 65 |
| 126 | 18 | | | 39 | 51 | 62 |
| 132 | 18 | | | 37 | 48 | 59 |
| 138 | 18 | | | 36 | 46 | 57 |
| 144 | 18 | | | | 44 | 54 |

| Minimum & Maximum Cover for 5" x 1" Steel Pipe | | | | | | |
|---|---|---|---|---|---|---|
| Gage | | 16 | 14 | 12 | 10 | 8 |
| Thickness | | 0.060 | 0.075 | 0.105 | 0.135 | 0.164 |
| Dia. (In) | Min. (In) | Max. (Ft) | Max. (Ft) | Max. (Ft) | Max. (Ft) | Max. (Ft) |
| 36 | 12 | 71 | 88 | 100+ | 100+ | 100+ |
| 42 | 12 | 60 | 76 | 100+ | 100+ | 100+ |
| 48 | 12 | 53 | 66 | 93 | 100+ | 100+ |
| 54 | 12 | 47 | 59 | 82 | 100+ | 100+ |
| 60 | 12 | 42 | 53 | 74 | 96 | 100+ |
| 66 | 12 | 38 | 48 | 67 | 87 | 100+ |
| 72 | 12 | 35 | 44 | 62 | 79 | 97 |
| 78 | 12 | 32 | 40 | 57 | 73 | 90 |
| 84 | 12 | 30 | 37 | 53 | 68 | 83 |
| 90 | 12 | 28 | 35 | 49 | 63 | 78 |
| 96 | 12 | 26 | 33 | 46 | 59 | 73 |
| 102 | 18 | 24 | 31 | 43 | 56 | 69 |
| 108 | 18 | | 29 | 41 | 53 | 65 |
| 114 | 18 | | 27 | 39 | 50 | 61 |
| 120 | 18 | | 26 | 37 | 47 | 58 |
| 126 | 18 | | | 35 | 45 | 55 |
| 132 | 18 | | | 33 | 43 | 53 |
| 138 | 18 | | | 32 | 41 | 50 |
| 144 | 18 | | | | 39 | 48 |

| Minimum & Maximum Cover for 6" x 2" Steel Multiplate Pipe* | | | | | | | | |
|---|---|---|---|---|---|---|---|---|
| Gage | | 12 | 10 | 8 | 7 | 5 | 3 | 1 |
| Thickness | | 0.111 | 0.140 | 0.170 | 0.188 | 0.218 | 0.249 | 0.280 |
| Dia. (In) | Min. (In) | Max. (Ft) | Max. (Ft) | Max. (Ft) | Max. (Ft) | Max. (Ft) | Max. (Ft) | Max. (Ft) |
| 60 | 12 | 46 | 67 | 87 | 100 | 100+ | 100+ | 100+ |
| 66 | 12 | 42 | 60 | 79 | 91 | 100+ | 100+ | 100+ |
| 72 | 12 | 38 | 55 | 73 | 83 | 100+ | 100+ | 100+ |
| 78 | 12 | 35 | 51 | 67 | 77 | 93 | 100+ | 100+ |
| 84 | 12 | 32 | 47 | 62 | 71 | 86 | 100+ | 100+ |
| 90 | 12 | 30 | 44 | 58 | 67 | 80 | 95 | 100+ |
| 96 | 12 | 28 | 41 | 54 | 62 | 75 | 89 | 97 |
| 102 | 18 | 27 | 39 | 51 | 59 | 71 | 84 | 91 |
| 108 | 18 | 25 | 37 | 48 | 55 | 67 | 79 | 86 |
| 114 | 18 | 24 | 35 | 45 | 52 | 63 | 75 | 82 |
| 120 | 18 | 22 | 33 | 43 | 50 | 60 | 71 | 77 |
| 126 | 18 | 21 | 31 | 41 | 47 | 57 | 68 | 74 |
| 132 | 18 | 20 | 30 | 39 | 45 | 54 | 64 | 70 |
| 138 | 18 | 19 | 28 | 37 | 43 | 52 | 62 | 67 |
| 144 | 18 | 18 | 27 | 36 | 41 | 50 | 59 | 64 |

*4 - 3/4" dia. steel bolts per foot.

## GENERAL NOTES

1. All material and workmanship shall be in accordance with the State of Alaska, Standard Specifications for Highway Construction.
2. The contractor shall select only pipes that meet specific height of cover criteria shown on the plans or in the special provisions.
3. No more than one type of pipe may be used on any single installation or installation grouping.
4. All structural plate pipes shall be placed on a pre-shaped foundation conforming to the depth of the bottom plates with clearance for assembling to the adjacent plates allowed.
5. See Standard Plan D-01 "Culvert Pipe & Arch Installation Details" for foundation and structural backfill details.
6. Minimum cover shall be measured from the top of pipe to the top of rigid pavement or to the bottom of flexible pavement subgrade. In all cases, the minimum cover shall not be less than 12". Minimum cover during construction shall be that required to protect the pipe from damage or deflecton.
7. These tables have been developed for an HL-93 live load and for compacted soil weighing 120 lbs. per cubic foot or less. If compacted soil cover exceeds 120 lbs. per cubic foot, the contractor shall use the depth of cover shown in the plans for the specific pipe. Where compacted soil cover exceeds 120 lbs. per cubic foot and no specific cover requirements are provided in the plans, the contractor shall determine the required minimum pipe cover in accordance with Section 12 of the 2017 AASHTO "LRFD Bridge Design Specifications".

## CORRUGATED CIRCULAR STEEL PIPE

## CORRUGATED STEEL PIPE-ARCH

| Minimum & Maximum Cover for 2 2/3" X 1/2" Steel Pipe-Arch | | | | | |
|---|---|---|---|---|---|
| 2 Tons/Sf Corner Bearing Pressure | | | | | |
| Span (Ft.-In.) | Rise (Ft.-In.) | Corner Radius (In) | Min. Thickness (In) | Min. Cover (In) | Max. Cover (Ft) |
| 17 | 13 | 3 4/8 | 16 (0.060) | 12 | 11 |
| 21 | 15 | 4 1/8 | 16 (0.060) | 12 | 11 |
| 24 | 18 | 4 7/8 | 16 (0.060) | 12 | 11 |
| 28 | 20 | 5 4/8 | 16 (0.060) | 12 | 11 |
| 35 | 24 | 6 7/8 | 16 (0.060) | 12 | 11 |
| 42 | 29 | 8 2/8 | 16 (0.060) | 12 | 11 |
| 49 | 33 | 9 5/8 | 14 (0.075) | 12 | 11 |
| 57 | 38 | 11 | 12 (0.109) | 12 | 11 |
| 64 | 43 | 12 3/8 | 12 (0.109) | 12 | 11 |
| 71 | 47 | 13 6/8 | 10 (0.138) | 12 | 11 |
| 77 | 52 | 15 1/8 | 10 (0.138) | 12 | 11 |
| 83 | 57 | 16 4/8 | 8 (0.168) | 12 | 11 |

| Minimum & Maximum Cover for 3" X 1" Steel Pipe-Arch | | | | | |
|---|---|---|---|---|---|
| 2 Tons/Sf Corner Bearing Pressure | | | | | |
| Span (Ft.-In.) | Rise (Ft.-In.) | Corner Radius (In) | Min. Thickness (In) | Min. Cover (In) | Max. Cover (Ft) |
| 53 | 41 | 10 2/8 | 14 (0.079) | 12 | 10 |
| 60 | 46 | 18 6/8 | 14 (0.079) | 15 | 29 |
| 66 | 51 | 20 6/8 | 14 (0.079) | 15 | 29 |
| 73 | 55 | 22 7/8 | 14 (0.079) | 18 | 18 |
| 81 | 59 | 20 7/8 | 14 (0.079) | 18 | 15 |
| 87 | 63 | 22 7/8 | 14 (0.079) | 18 | 15 |
| 95 | 67 | 24 3/8 | 14 (0.079) | 18 | 15 |
| 103 | 71 | 26 1/8 | 14 (0.079) | 18 | 14 |
| 112 | 75 | 27 6/8 | 14 (0.079) | 21 | 14 |
| 117 | 79 | 29 4/8 | 12 (0.109) | 21 | 14 |
| 128 | 83 | 31 2/8 | 10 (0.138) | 24 | 14 |
| 137 | 87 | 33 | 10 (0.138) | 24 | 14 |
| 142 | 91 | 34 6/8 | 10 (0.138) | 24 | 13 |
| 150 | 96 | 36 | 10 (0.138) | 30 | 13 |
| 157 | 96 | 38 | 10 (0.138) | 30 | 13 |
| 164 | 105 | 40 | 10 (0.138) | 30 | 14 |
| 171 | 110 | 41 | 10 (0.138) | 30 | 13 |

| Minimum & Maximum Cover for 5" X 1" Steel Pipe-Arch | | | | | |
|---|---|---|---|---|---|
| 2 Tons/Sf Corner Bearing Pressure | | | | | |
| Span (Ft.-In.) | Rise (Ft.-In.) | Corner Radius (In) | Min. Thickness (In) | Min. Cover (In) | Max. Cover (Ft) |
| 53 | 41 | 10 2/8 | 14 (0.079) | 12 | 10 |
| 60 | 46 | 18 6/8 | 14 (0.079) | 15 | 29 |
| 66 | 51 | 20 6/8 | 14 (0.079) | 15 | 29 |
| 73 | 55 | 22 7/8 | 14 (0.079) | 18 | 18 |
| 81 | 59 | 20 7/8 | 14 (0.079) | 18 | 15 |
| 87 | 63 | 22 7/8 | 14 (0.079) | 18 | 15 |
| 95 | 67 | 24 3/8 | 14 (0.079) | 18 | 15 |
| 103 | 71 | 26 1/8 | 14 (0.079) | 18 | 14 |
| 112 | 75 | 27 6/8 | 14 (0.079) | 21 | 14 |
| 117 | 79 | 29 4/8 | 12 (0.109) | 21 | 14 |
| 128 | 83 | 31 2/8 | 10 (0.138) | 24 | 14 |
| 137 | 87 | 33 | 10 (0.138) | 24 | 14 |
| 142 | 91 | 34 6/8 | 10 (0.138) | 24 | 13 |
| 150 | 96 | 36 | 10 (0.138) | 30 | 13 |
| 157 | 96 | 38 | 10 (0.138) | 30 | 13 |
| 164 | 105 | 40 | 10 (0.138) | 30 | 14 |
| 171 | 110 | 41 | 10 (0.138) | 30 | 13 |

| Minimum & Maximum Cover for Steel Multiplate Pipe-Arch 6" x 2" * | | | | | |
|---|---|---|---|---|---|
| 2 Tons/Sf Corner Bearing Pressure | | | | | |
| Span (Ft.-In.) | Rise (Ft.-In.) | Corner Radius (In) | Min. Gage (In) | Min. Cover (In) | Max. Cover (Ft) |
| 6-1 | 4-7 | 18 | 12 (0.111) | 12 | 14 |
| 7-0 | 5-1 | 18 | 12 (0.111) | 12 | 12 |
| 7-11 | 5-7 | 18 | 12 (0.111) | 12 | 10 |
| 8-10 | 6-1 | 18 | 12 (0.111) | 18 | 9 |
| 9-9 | 6-7 | 18 | 12 (0.111) | 18 | 8 |
| 10-11 | 7-1 | 18 | 12 (0.111) | 18 | 6 |
| 11-10 | 7-7 | 18 | 12 (0.111) | 18 | 5 |
| 12-10 | 8-4 | 18 | 12 (0.111) | 24 | 5 |
| 13-3 | 9-4 | 31 | 10 (0.140) | 24 | 11 |
| 14-2 | 9-10 | 31 | 10 (0.140) | 24 | 10 |
| 15-4 | 10-4 | 31 | 10 (0.140) | 24 | 9 |
| 16-3 | 10-10 | 31 | 10 (0.140) | 30 | 8 |
| 17-2 | 11-4 | 31 | 10 (0.140) | 30 | 8 |
| 18-1 | 11-10 | 31 | 10 (0.140) | 30 | 7 |
| 19-3 | 12-4 | 31 | 10 (0.140) | 30 | 7 |
| 19-11 | 12-10 | 31 | 10 (0.140) | 30 | 6 |
| 20-7 | 13-2 | 31 | 10 (0.140) | 36 | 6 |

*4 - 3/4" dia. steel bolts per foot.

State of Alaska DOT&PF
ALASKA STANDARD PLAN

**PIPE AND ARCH TABLES**

Adopted as an Alaska Standard Plan by: Carolyn Morehouse
Carolyn Morehouse, P.E.
Chief Engineer

Adoption Date: 7/17/2020

Last Code and Stds. Review
By: KLH Date: 7/8/2020

Next Code and Standards Review date: 7/8/2030

| Maximum Cover for Type S Corrugated Polyethelene Pipe | |
|---|---|
| Size (in) | Max. Cover (ft) |
| 12 | 24 |
| 15 | 25 |
| 18 | 24 |
| 24 | 20 |
| 30 | 20 |
| 36 | 18 |
| 42 | 16 |
| 48 | 17 |

## GENERAL NOTES

1. All materials and workmanship shall be in accordance with the State of Alaska Standard Specifications for Highway Construction.

2. For foundation and structural backfill details see Standard Plan D-01 "Culvert Pipe & Arch Installation Details".

3. Pipe cover height is measured from top of the pipe to top of rigid pavement, or to the bottom of subgrade for flexible pavement. In all cases the minimum cover shall be no less than 2 ft. Where loads traverse the culvert during construction minimum cover shall be no less than 4 ft.

State of Alaska DOT&PF
ALASKA STANDARD PLAN

**PIPE AND ARCH TABLES**

Adopted as an Alaska Standard Plan by: Carolyn Morehouse
Carolyn Morehouse, P.E.
Chief Engineer

Adoption Date: 7/17/2020

Last Code and Stds. Review
By: KLH Date: 7/8/2020

Next Code and Standards Review date: 7/8/2030

## ALUMINUM SPIRAL RIB PIPE

| Minimum & Maximum Cover for Aluminum Spiral Rib Circular Pipe* | | | | | |
|---|---|---|---|---|---|
| Gage | | 16 | 14 | 12 | 10 |
| Thickness | | 0.064 | 0.079 | 0.109 | 0.138 |
| Dia. (In) | Min. (In) | Max. (Ft) | Max. (Ft) | Max. (Ft) | Max. (Ft) |
| 18 | 12 | 43 | 61 | | |
| 21 | 12 | 38 | 52 | 84 | |
| 24 | 12 | 33 | 45 | 73 | |
| 30 | 15 | 26 | 36 | 58 | |
| 36 | 18 | 21 | 30 | 49 | 69 |
| 42 | 21 | | 25 | 41 | 59 |
| 48 | 24 | | | 36 | 51 |
| 54 | 24 | | | 32 | 46 |
| 60 | 24 | | | 29 | 41 |
| 66 | 24 | | | | 37 |
| 72 | 30 | | | | 34 |

*¾ x ¾ x 7½ in. Corrugations

| Minimum & Maximum Cover for Aluminum Spiral Rib Pipe-Arch* | | | | | | |
|---|---|---|---|---|---|---|
| Gage | | | 16 | 14 | 12 | 10 |
| Thickness | | | 0.060 | 0.075 | 0.105 | 0.135 |
| Span (Ft.-In.) | Rise (Ft.-In.) | Min. Cover (In) | Max. Cover (Ft) | | | |
| 20 | 16 | 12 | 16 | | | |
| 23 | 19 | 12 | 15 | | | |
| 27 | 21 | 15 | 13 | 13 | | |
| 33 | 26 | 18 | 13 | 13 | 13 | |
| 40 | 31 | 21 | | 13 | 13 | |
| 46 | 36 | 24 | | | 13 | 13 |
| 53 | 41 | 24 | | | 13 | 13 |
| 60 | 46 | 24 | | | 13 | 13 |
| 66 | 51 | 24 | | | | 13 |

*¾ x ¾ x 7½ in. Corrugations

## STEEL SPIRAL RIB PIPE

| Minimum & Maximum Cover for Steel and Aluminized Steel Spiral Rib Circular Pipe* | | | | | |
|---|---|---|---|---|---|
| Gage | | 16 | 14 | 12 | 10 |
| Thickness | | 0.064 | 0.079 | 0.109 | 0.138 |
| Dia. (In) | Min. (In) | Max. (Ft) | Max. (Ft) | Max. (Ft) | Max. (Ft) |
| 18 | 12 | 91 | | | |
| 24 | 12 | 68 | 95 | 100+ | |
| 30 | 12 | 54 | 76 | 100+ | |
| 36 | 12 | 45 | 63 | 100+ | |
| 42 | 12 | 38 | 54 | 90 | |
| 48 | 12 | 33 | 47 | 79 | |
| 54 | 18 | 30 | 42 | 70 | |
| 60 | 18 | 27 | 38 | 63 | 92 |
| 66 | 18 | 24 | 34 | 57 | 83 |
| 72 | 18 | | 31 | 52 | 76 |
| 78 | 24 | | 29 | 48 | 70 |
| 84 | 24 | | 27 | 45 | 65 |
| 90 | 24 | | | 42 | 61 |
| 96 | 24 | | | 39 | 56 |
| 102 | 30 | | | 36 | 50 |
| 108 | 30 | | | 32 | 45 |

*¾ x ¾ x 7½ in. Corrugations.

| Minimum & Maximum Cover for Steel Spiral Rib Pipe-Arch* | | | | | |
|---|---|---|---|---|---|
| | | | 2 Tons/Sf Corner Bearing Pressure | | |
| Thickness | | | 0.064 | 0.079 | 0.109 |
| Span (Ft.-In.) | Rise (Ft.-In.) | Min. Cover (In) | Max. Cover (Ft) | | |
| 20 | 16 | 12 | 13 | | |
| 23 | 19 | 12 | 13 | | |
| 27 | 21 | 12 | 11 | | |
| 33 | 26 | 12 | 11 | | |
| 40 | 31 | 12 | 11 | | |
| 46 | 36 | 12 | 11 | | |
| 53 | 41 | 18 | | 11 | |
| 60 | 46 | 18 | | 19 | |
| 66 | 51 | 18 | | 19 | |
| 73 | 55 | 18 | | | 18 |
| 81 | 59 | 18 | | | 15 |
| 87 | 63 | 18 | | | 15 |
| 95 | 67 | 18 | | | 15 |

*¾ x ¾ x 7½ in. Corrugations

## GENERAL NOTES

1. All material and workmanship shall be in accordance with the State of Alaska, Standard Specifications for Highway Construction.
2. The contractor shall select only pipes that meet specific height of cover criteria shown on the plans or in the special provisions.
3. No more than one type of pipe may be used on any single installation or installation grouping.
4. All structural plate pipes shall be placed on a pre-shaped foundation conforming to the depth of the bottom plates with clearance for assembling to the adjacent plates allowed.
5. See Standard Plan D-01 "Culvert Pipe & Arch Installation Details" for foundation and structural backfill details.
6. Minimum cover shall be measured from the top of pipe to the top of rigid pavement or to the bottom of flexible pavement subgrade. In all cases, the minimum cover shall not be less than 12". Minimum cover during construction shall be that required to protect the pipe from damage or deflecton.
7. These tables have been developed for an HL-93 live load and for compacted soil weighing 120 lbs. per cubic foot or less. If compacted soil cover exceeds 120 lbs. per cubic foot, the contractor shall use the depth of cover shown in the plans for the specific pipe. Where compacted soil cover exceeds 120 lbs. per cubic foot and no specific cover requirements are provided in the plans, the contractor shall determine the required minimum pipe cover in accordance with Section 12 of the 2017 AASHTO "LRFD Bridge Design Specifications".

State of Alaska DOT&PF
ALASKA STANDARD PLAN

**PIPE AND ARCH TABLES**

Adopted as an Alaska Standard Plan by: Carolyn Morehouse

Carolyn Morehouse, P.E.
Chief Engineer

Adoption Date: 7/17/2020

Last Code and Stds. Review
By: KLH Date: 7/8/2020

Next Code and Standards Review date: 7/8/2030

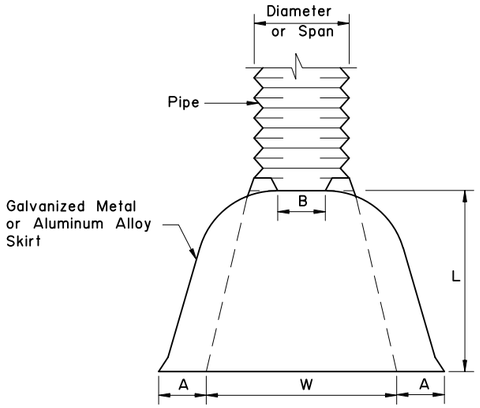


PLAN

ROUND AND PIPE ARCH

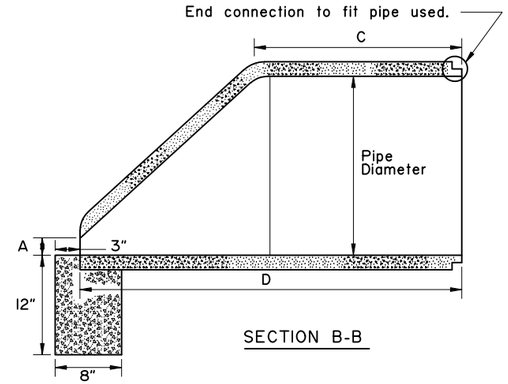


SECTION B-B

| MINIMUM DIMENSIONS | | | | | |
|---|---|---|---|---|---|
| Pipe Diameter | A | B | C | D | E |
| 12" | 4" | 1 3/4" | 24" | 46" | 24" |
| 18" | 9" | 2" | 25" | 50" | 36" |
| 24" | 9 1/2" | 2 1/2" | 30" | 72" | 48" |
| 30" | 12" | 3" | 20" | 73" | 60" |
| 36" | 15" | 3 3/8" | 35" | 97" | 72" |
| 42" | 21" | 3 3/4" | 35" | 98" | 78" |
| 48" | 24" | 4 1/4" | 26" | 98" | 84" |
| 54" | 27" | 4 5/8" | 33" | 99" | 82" |

| ROUND PIPE | | | | | | | | | | |
|---|---|---|---|---|---|---|---|---|---|---|
| Pipe Diam. Inches | Thickness For Aluminum | Thk. for Galv. Metal | Dimension Inches | | | | | | Skirt | Approx. Slope |
| | | | A 1" Tol. | B Max. | H 1" Tol. | L 1 1/2" Tol. | W 2" Tol. | T 2" Tol. | | |
| 12" | 0.060 | 0.064 | 6" | 6" | 6" | 21" | 24" | 34" | 1 Pc. | 2 1/2 |
| 15" | 0.060 | 0.064 | 7" | 8" | 6" | 26" | 30" | 40" | 1 Pc. | 2 1/2 |
| 18" | 0.060 | 0.064 | 8" | 10" | 6" | 31" | 36" | 46" | 1 Pc. | 2 1/2 |
| 21" | 0.060 | 0.064 | 9" | 12" | 6" | 36" | 42" | 52" | 1 Pc. | 2 1/2 |
| 24" | 0.075 | 0.064 | 10" | 13" | 6" | 41" | 48" | 58" | 1 Pc. | 2 1/2 |
| 30" | 0.075 | 0.079 | 12" | 16" | 8" | 51" | 60" | 70" | 1 Pc. | 2 1/2 |
| 36" | 0.105 | 0.079 | 14" | 19" | 9" | 60" | 72" | 94" | 2 Pc. | 2 1/2 |
| 42" | 0.105 | 0.109 | 16" | 22" | 11" | 69" | 84" | 106" | 2 Pc. | 2 1/2 |
| 48" | 0.105 | 0.109 | 18" | 27" | 12" | 78" | 90" | 112" | 2 Pc. | 2 1/4 |
| 54" | 0.105 | 0.109 | 18" | 30" | 12" | 84" | 102" | 122" | 2 Pc. | 2 1/4 |
| 60" | 0.135 | 0.109 | 18" | 33" | 12" | 87" | 114" | 134" | 3 Pc. | 2 1/4 |
| 66" | 0.135 | 0.109 | 18" | 36" | 12" | 87" | 120" | 142" | 3 Pc. | 2 1/4 |
| 72" | 0.135 | 0.109 | 18" | 39" | 12" | 87" | 126" | 146" | 3 Pc. | 2 1/4 |
| 78" | — — | 0.109 | 18" | 42" | 12" | 87" | 132" | 152" | 3 Pc. | 1 1/4 |
| 84" | — — | 0.109 | 18" | 45" | 12" | 87" | 138" | 158" | 3 Pc. | 1 1/6 |

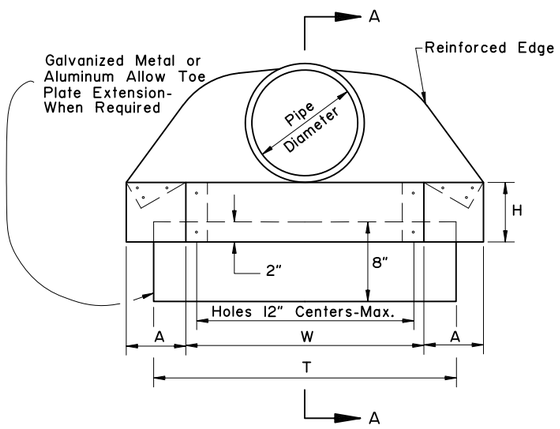


ELEVATION

ROUND PIPE

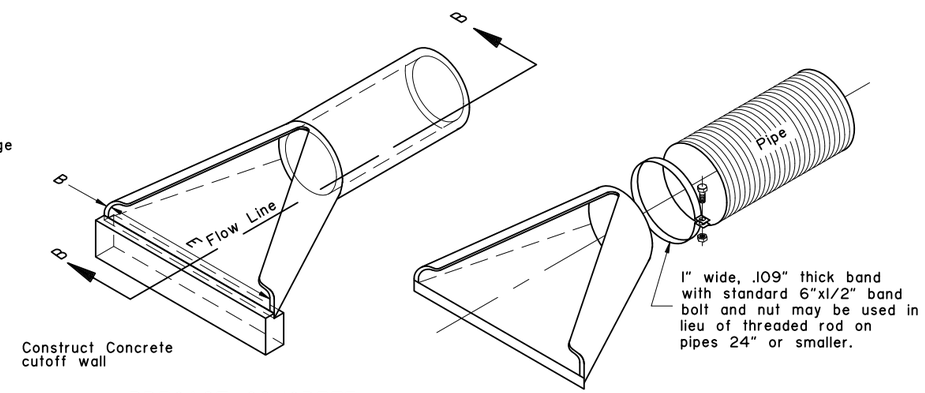


PRECAST CONCRETE END SECTION

| PIPE-ARCH | | | | | | | | | | | |
|---|---|---|---|---|---|---|---|---|---|---|---|
| Pipe-Arch Dimension Inches | | Thickness for Aluminum | Thk. for Galv. Metal | Dimension Inches | | | | | | Skirt | Approx. Slope |
| Span | Rise | | | A 1" Tol. | B Max. | H 1" Tol. | L 1 1/2" Tol. | W 2" Tol. | T 2" Tol. | | |
| 17" | 13" | 0.060 | 0.064 | 7" | 9" | 6" | 19" | 30" | 40" | 1 Pc. | 2 1/2 |
| 21" | 15" | 0.060 | 0.064 | 7" | 10" | 6" | 23" | 36" | 46" | 1 Pc. | 2 1/2 |
| 24" | 18" | 0.060 | 0.064 | 8" | 12" | 6" | 28" | 42" | 52" | 1 Pc. | 2 1/2 |
| 28" | 20" | 0.075 | 0.064 | 9" | 14" | 6" | 32" | 48" | 58" | 1 Pc. | 2 1/2 |
| 35" | 24" | 0.075 | 0.079 | 10" | 16" | 6" | 39" | 60" | 70" | 1 Pc. | 2 1/2 |
| 42" | 29" | 0.105 | 0.079 | 12" | 18" | 8" | 46" | 75" | 85" | 1 Pc. | 2 1/2 |
| 49" | 33" | 0.105 | 0.109 | 13" | 21" | 9" | 53" | 85" | 103" | 2 Pc. | 2 1/2 |
| 57" | 38" | 0.105 | 0.109 | 18" | 26" | 12" | 63" | 90" | 114" | 2 Pc. | 2 1/2 |
| 64" | 43" | 0.105 | 0.109 | 18" | 30" | 12" | 70" | 102" | 130" | 2 Pc. | 2 1/4 |
| 71" | 47" | 0.135 | 0.109 | 18" | 33" | 12" | 77" | 114" | 144" | 3 Pc. | 2 1/4 |
| 77" | 52" | 0.135 | 0.109 | 18" | 36" | 12" | 84" | 120" | 158" | 3 Pc. | 2 1/4 |
| 83" | 57" | 0.135 | 0.109 | 18" | 39" | 12" | 90" | 126" | 170" | 3 Pc. | 2 1/4 |

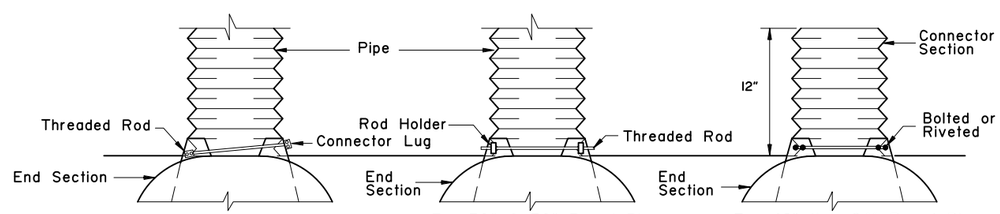


For 12" thru 24" Round Pipe with Annular Corrugations

For 30" & 36" Round Pipe and 18"x11" thru 58"x36" Pipe Arch with Annular Corrugations.

For 42" thru 84" Round Pipe and 65"x40" thru 85"x54" Pipe Arch with Annular Corrugations and All Helically Corrugated Pipe and Pipe Arch.

DESIGN A

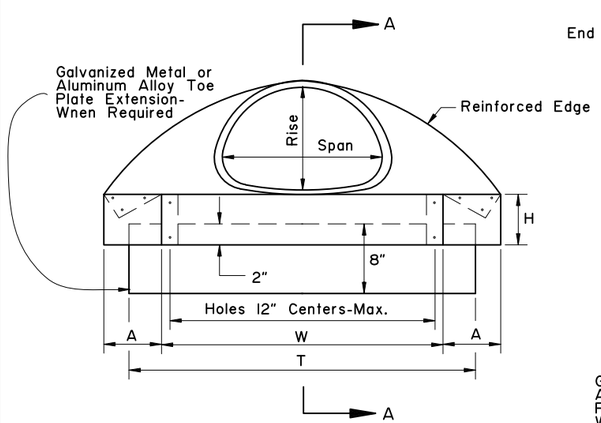


ELEVATION

PIPE ARCH

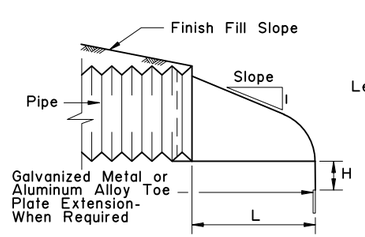


SECTION A-A

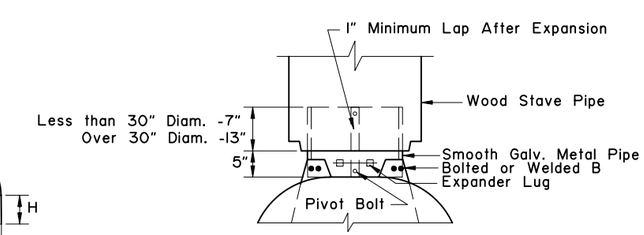


DESIGN B

METAL END SECTION CONNECTED TO WOOD STAVE PIPE

## GENERAL NOTES:

1. Toe plate extensions will be required only when provided for on the plans. When required, the toe plate extensions shall be punched with holes to match those in lip of skirt and fastened with 3/8 inch or larger galvanized nuts and bolts and shall be the same gage as the end section.
2. Galvanized Metal or Aluminum Alloy End Sections may be used on Wood Stave and Plastic Pipe.
3. All 3 piece bodies shall have 12 gage sides and 10 gage center panels. Multiple panel bodies shall have lap seams which are to be tightly joined by 3/8" galvanized rivets or bolts.

State of Alaska DOT&PF
ALASKA STANDARD PLAN

CULVERT END SECTIONS

Adopted as an Alaska Standard Plan by: Kenneth J. Fisher, P.E. Chief Engineer

Adoption Date: 02/08/2019

Last Code and Stds. Review
By: Date:

Next Code and Standards Review date: 02/08/2029

## GENERAL NOTES

1. See general notes on sheet 1 of 3.
2. See sheet 1 of 3 for metal end section dimensions.
3. Insert bolts, washers and rivets shall be galvanized. Insert thickness is the same as the end section.
4. Use culvert inserts only at inlet.

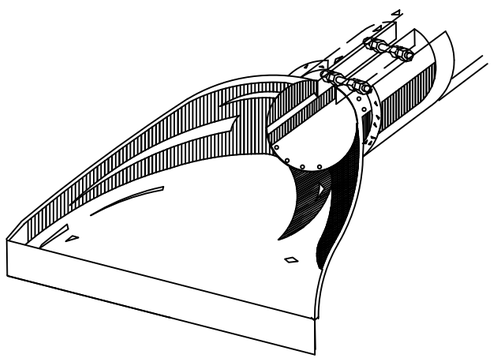

FOR CONNECTING CONCRETE PIPE OR CORRUGATED POLYETHYLENE PIPE TO METAL END SECTION.

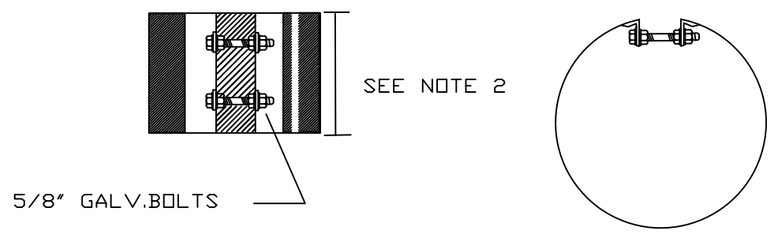


# METAL INSERTS FOR USE WITH CORRUGATED PLASTIC PIPE AND METAL END SECTIONS

State of Alaska DOT&PF
ALASKA STANDARD PLAN

**CULVERT END SECTIONS**

Adopted as an Alaska Standard Plan by: Kenneth J. Fisher, P.E.
Chief Engineer

Adoption Date: 02/08/2019

Last Code and Stds. Review
By: Date:

Next Code and Standards Review date: 02/08/2029

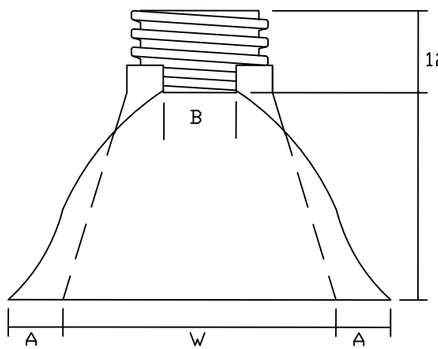


TOP VIEW

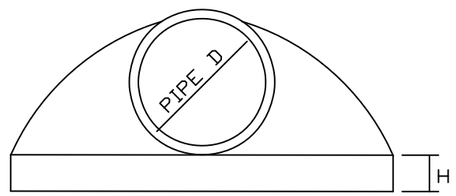


END VIEW

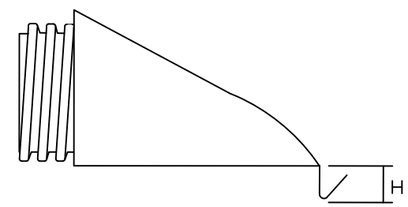


SIDE VIEW

| PIPE DIAMETER | DIMENSIONS IN MILLIMETERS | | | | |
|---|---|---|---|---|---|
| | A(1"±) | B MAX | H(1"±) | L(1/2"±) | W(2"±) |
| 12" and 15" | 6 1/2" | 10" | 6 1/2" | 25" | 29" |
| 18" | 7 1/2" | 15" | 6 1/2" | 32" | 35" |
| 24" | 7 1/2" | 18" | 6 1/2" | 36" | 45" |
| 30" | 10 1/2" | N/A | 7" | 53" | 68" |
| 36" | 10 1/2" | N/A | 7" | 53" | 68" |

# PLASTIC END SECTION FOR CORRUGATED PLASTIC PIPE

## GENERAL NOTES

1. Plastic flared end sections may be used with HDPE corrugated culvert pipes where noted in project plans or approved by project engineer.
2. Consult manufacturer's recommendations for proper sizing and coupling devices. Recommended fasteners may include connecting bands or cinch ties. Fittings across dimension B may include threaded rods with wing nuts or bolts and washers. plastic welds may be recommended.
3. Align coupling to accomodate pipe corrugations.
4. Metal components e.g. bolts or washers must be galvanized.
5. Attachment of end section should preserve culvert alignment and not impair pipe function. Use end sections only on culvert inlet.
6. Toe plate extensions will be required only when designated on the plans.
7. End sections will not be used on HDPE culvert pipes larger than 36" unless indicated by project plans or approved by the Engineer.

State of Alaska DOT&PF
ALASKA STANDARD PLAN

**CULVERT END SECTIONS**

Adopted as an Alaska Standard Plan by: Kenneth J. Fisher, P.E.
Chief Engineer

Adoption Date: 02/08/2019

Last Code and Stds. Review
By: Date:

Next Code and Standards Review date: 02/08/2029

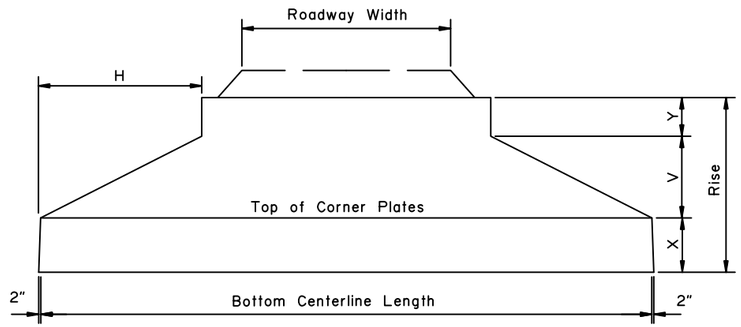


SECTION A-A

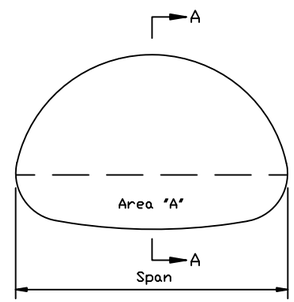


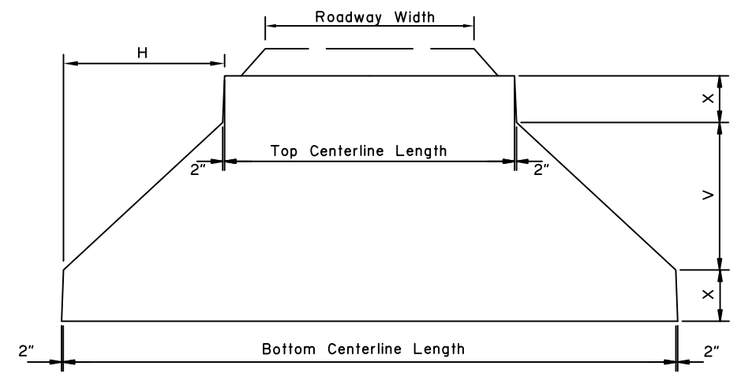


SECTION B-B

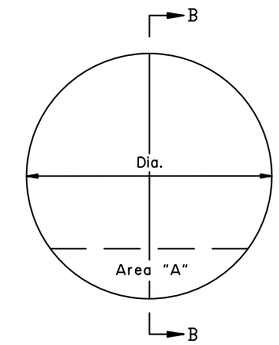


## STRUCTURAL PLATE PIPE ARCH

| SPAN | RISE | X in ft. | 'H' in Feet For Bevels of | | | 'Y' in Feet For Bevels of | | | 'V' in Feet For Bevels of | | | AREA "A" Sq. Ft. |
|---|---|---|---|---|---|---|---|---|---|---|---|---|
| | | | 1 1/2:1 | 2:1 | 3:1 | 1 1/2:1 | 2:1 | 3:1 | 1 1/2:1 | 2:1 | 3:1 | |
| 6'- 1" | 4'- 7" | 2.3 | | | 6.0 | | | 0.3 | | | 2.0 | 12 |
| 6'- 4" | 4'- 9" | 2.1 | | | 6.0 | | | 0.7 | | | 2.0 | 11 |
| 6'- 9" | 4'- 11" | 2.4 | | | 6.0 | | | 0.5 | | | 2.0 | 14 |
| 7'- 0" | 5'- 1" | 2.3 | | | 6.0 | | | 0.8 | | | 2.0 | 13 |
| 7'- 3" | 5'- 3" | 2.1 | | 6.0 | 6.0 | | 0.2 | 1.2 | | 3.0 | 2.0 | 14 |
| 7'- 8" | 5'- 5" | 2.3 | | 6.0 | 6.0 | | 0.1 | 1.1 | | 3.0 | 2.0 | 16 |
| 7'-11" | 5'- 7" | 2.2 | | 6.0 | 6.0 | | 0.4 | 1.4 | | 3.0 | 2.0 | 15 |
| 8'- 2" | 5'- 9" | 2.0 | | 6.0 | 6.0 | | 0.8 | 1.8 | | 3.0 | 2.0 | 15 |
| 8'- 7" | 5'- 11" | 2.3 | | 6.0 | 6.0 | | 0.6 | 1.6 | | 3.0 | 2.0 | 17 |
| 8'-10" | 6'- 1" | 2.2 | | 6.0 | 6.0 | | 0.9 | 1.9 | | 3.0 | 2.0 | 17 |
| 9'- 4" | 6'- 3" | 2.4 | | 6.0 | 6.0 | | 0.9 | 1.9 | | 3.0 | 2.0 | 19 |
| 9'- 6" | 6'- 5" | 2.3 | 6.0 | 6.0 | 6.0 | 0.1 | 1.1 | 2.1 | 4.0 | 3.0 | 2.0 | 20 |
| 9'- 9" | 6'- 7" | 2.2 | 6.0 | 6.0 | 6.0 | 0.4 | 1.4 | 2.4 | 4.0 | 3.0 | 2.0 | 19 |
| 10'- 3" | 6'- 9" | 2.4 | 6.0 | 6.0 | 6.0 | 0.4 | 1.4 | 2.4 | 4.0 | 3.0 | 2.0 | 22 |
| 10'- 8" | 6'- 11" | 2.8 | 6.0 | 6.0 | 6.0 | 0.1 | 1.1 | 2.1 | 4.0 | 3.0 | 2.0 | 25 |
| 10'-11" | 7'- 1" | 2.6 | 6.0 | 6.0 | 6.0 | 0.5 | 1.5 | 2.5 | 4.0 | 3.0 | 2.0 | 24 |
| 11'- 5" | 7'- 3" | 2.8 | 6.0 | 6.0 | 6.0 | 0.5 | 1.5 | 2.5 | 4.0 | 3.0 | 2.0 | 27 |
| 11'- 7" | 7'- 5" | 2.7 | 6.0 | 6.0 | 8.0 | 0.7 | 1.7 | 2.0 | 4.0 | 3.0 | 2.7 | 26 |
| 11'-10" | 7'- 7" | 2.5 | 6.0 | 6.0 | 8.0 | 1.1 | 2.1 | 2.4 | 4.0 | 3.0 | 2.7 | 26 |
| 12'- 4" | 7'- 9" | 2.8 | 6.0 | 6.0 | 8.0 | 1.0 | 1.9 | 2.3 | 4.0 | 3.0 | 2.7 | 29 |
| 12'- 6" | 7'- 11" | 2.7 | 6.0 | 6.0 | 8.0 | 1.2 | 2.2 | 2.5 | 4.0 | 3.0 | 2.7 | 29 |
| 12'- 8" | 8'- 1" | 2.5 | 6.0 | 8.0 | 8.0 | 1.6 | 1.6 | 2.9 | 4.0 | 4.0 | 2.7 | 27 |
| 12'-10" | 8'- 4" | 2.3 | 6.0 | 8.0 | 8.0 | 2.0 | 2.0 | 3.3 | 4.0 | 4.0 | 2.7 | 25 |
| 13'- 5" | 8'- 5" | 2.6 | 6.0 | 8.0 | 8.0 | 1.8 | 1.8 | 3.1 | 4.0 | 4.0 | 2.7 | 30 |
| 13'-11" | 8'- 7" | 2.9 | 6.0 | 8.0 | 8.0 | 1.7 | 1.7 | 3.0 | 4.0 | 4.0 | 2.7 | 34 |
| 14'- 1" | 8'- 9" | 2.8 | 6.0 | 8.0 | 8.0 | 2.0 | 2.0 | 3.2 | 4.0 | 4.0 | 2.7 | 33 |
| 14'- 3" | 8'- 11" | 2.6 | 6.0 | 8.0 | 8.0 | 2.3 | 2.3 | 3.6 | 4.0 | 4.0 | 2.7 | 32 |
| 14'-10" | 9'- 1" | 2.9 | 6.0 | 8.0 | 8.0 | 2.2 | 2.2 | 3.5 | 4.0 | 4.0 | 2.7 | 37 |
| 15'- 4" | 9'- 3" | 3.2 | 6.0 | 8.0 | 8.0 | 2.1 | 2.1 | 3.4 | 4.0 | 4.0 | 2.7 | 40 |
| 15'- 6" | 9'- 5" | 3.0 | 6.0 | 8.0 | 12.0 | 2.4 | 2.4 | 2.4 | 4.0 | 4.0 | 4.0 | 39 |
| 15'- 8" | 9'- 7" | 2.8 | 6.0 | 8.0 | 12.0 | 2.8 | 2.8 | 2.8 | 4.0 | 4.0 | 4.0 | 38 |
| 15'-10" | 9'- 10" | 2.7 | 8.0 | 8.0 | 14.0 | 1.8 | 3.1 | 2.4 | 5.3 | 4.0 | 4.7 | 35 |
| 16'- 5" | 9'- 11" | 3.0 | 8.0 | 8.0 | 14.0 | 1.6 | 2.9 | 2.2 | 5.3 | 4.0 | 4.7 | 41 |
| 16'- 7" | 10'- 1" | 2.8 | 8.0 | 8.0 | 14.0 | 2.0 | 3.3 | 2.6 | 5.3 | 4.0 | 4.7 | 40 |

## STRUCTURAL PLATE PIPE

| Dia. Inches | 'H' in Feet For Bevels of | | | 'V' in Feet For Bevels of | | | 'X' in Feet For Bevels of | | | Area "A" in Sq. Ft. | | |
|---|---|---|---|---|---|---|---|---|---|---|---|---|
| | 1 1/2:1 | 2:1 | 3:1 | 1 1/2:1 | 2:1 | 3:1 | 1 1/2:1 | 2:1 | 3:1 | 1 1/2:1 | 2:1 | 3:1 |
| 60 | 6.0 | 6.0 | 8.0 | 4.0 | 3.0 | 2.7 | 0.5 | 1.0 | 1.2 | 0.7 | 2.5 | 3.2 |
| 66 | 6.0 | 6.0 | 8.0 | 4.0 | 3.0 | 2.7 | 0.8 | 1.2 | 1.4 | 1.5 | 3.7 | 4.6 |
| 72 | 6.0 | 8.0 | 12.0 | 4.0 | 4.0 | 4.0 | 1.0 | 1.0 | 1.0 | 2.6 | 3.5 | 2.8 |
| 78 | 6.0 | 6.0 | 12.0 | 4.0 | 3.0 | 4.0 | 1.2 | 1.2 | 1.2 | 3.9 | 6.7 | 4.2 |
| 84 | 6.0 | 8.0 | 12.0 | 4.0 | 4.0 | 4.0 | 1.5 | 1.5 | 1.5 | 5.4 | 5.6 | 5.7 |
| 90 | 6.0 | 8.0 | 12.0 | 4.0 | 4.0 | 4.0 | 1.8 | 1.8 | 1.8 | 7.1 | 7.3 | 7.5 |
| 96 | 8.0 | 8.0 | 16.0 | 5.3 | 4.0 | 5.3 | 1.4 | 2.0 | 1.4 | 4.9 | 9.3 | 5.2 |
| 102 | 8.0 | 8.0 | 14.0 | 5.3 | 4.0 | 4.7 | 1.6 | 2.2 | 1.9 | 6.7 | 12.0 | 9.2 |
| 108 | 8.0 | 8.0 | 14.0 | 5.3 | 4.0 | 4.7 | 1.8 | 2.5 | 2.2 | 8.5 | 13.8 | 11.4 |
| 114 | 8.0 | 14.0 | 14.0 | 5.3 | 7.0 | 4.7 | 2.1 | 1.2 | 2.4 | 10.7 | 5.0 | 13.8 |
| 120 | 8.0 | 14.0 | 18.0 | 5.3 | 7.0 | 6.0 | 2.4 | 1.5 | 2.0 | 13.0 | 6.8 | 10.7 |
| 126 | 8.0 | 14.0 | 18.0 | 5.3 | 7.0 | 6.0 | 2.6 | 1.8 | 2.2 | 15.5 | 8.9 | 13.1 |
| 132 | 12.0 | 14.0 | 18.0 | 8.0 | 7.0 | 6.0 | 1.5 | 2.0 | 2.5 | 6.9 | 11.1 | 15.7 |
| 138 | 12.0 | 16.0 | 24.0 | 8.0 | 8.0 | 8.0 | 1.8 | 1.8 | 1.8 | 9.1 | 9.3 | 9.5 |
| 144 | 12.0 | 12.0 | 20.0 | 8.0 | 6.0 | 6.7 | 2.0 | 3.0 | 2.6 | 11.4 | 21.2 | 18.2 |
| 150 | 12.0 | 16.0 | 24.0 | 8.0 | 8.0 | 8.0 | 2.2 | 2.2 | 2.2 | 14.0 | 14.2 | 14.5 |
| 156 | 12.0 | 16.0 | 24.0 | 8.0 | 8.0 | 8.0 | 2.5 | 2.5 | 2.5 | 16.8 | 17.0 | 17.3 |
| 162 | 12.0 | 16.0 | 24.0 | 8.0 | 8.0 | 8.0 | 2.8 | 2.8 | 2.8 | 19.6 | 20.1 | 20.4 |
| 168 | 14.0 | 14.0 | 22.0 | 9.3 | 7.0 | 7.3 | 2.4 | 3.5 | 3.3 | 15.8 | 29.1 | 27.4 |
| 174 | 14.0 | 14.0 | 24.0 | 9.3 | 7.0 | 8.0 | 2.6 | 3.8 | 3.2 | 18.8 | 32.8 | 26.9 |
| 180 | 12.0 | 16.0 | 24.0 | 8.0 | 8.0 | 8.0 | 3.5 | 3.5 | 3.5 | 31.1 | 30.3 | 30.7 |

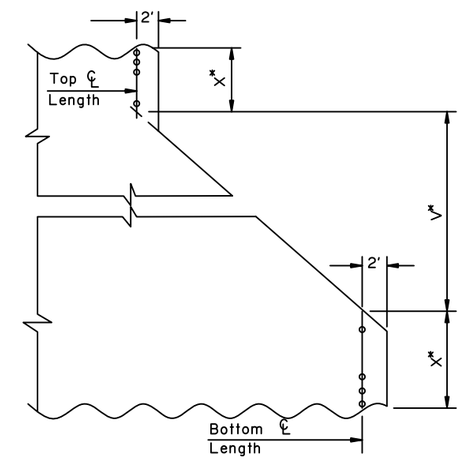


* For elliptical pipe, increase vertical dimensions by percent of ellipse.

State of Alaska DOT&PF
ALASKA STANDARD PLAN

**CULVERT BEVELS**

Adopted as an Alaska Standard Plan by: Kenneth J. Fisher, P.E.
Chief Engineer

Adoption Date: 02/08/2019

Last Code and Stds. Review
By: Date:

Next Code and Standards Review date: 02/08/2029

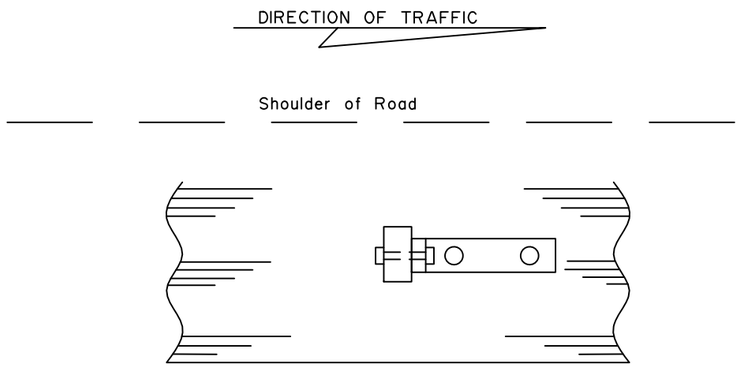


TOP VIEW

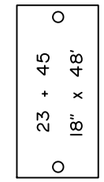


Sta. and size of Culvert to be stamped into a 2"x4"x0.064" thick brass plate, fastened, with No. 8 round head brass screws, to the marker post as shown. Plate to be on side of post facing traffic.

## GENERAL NOTES:

1. Culvert marker post shall be installed with galvanized steel hardware meeting the following requirements: Galvanizing for nuts and washers shall meet the requirements of ASTM A-153, Class C. Galvanizing for steel mounting supports shall meet the requirements of MIL-P-26915A, or ASTM A-153, Class C.

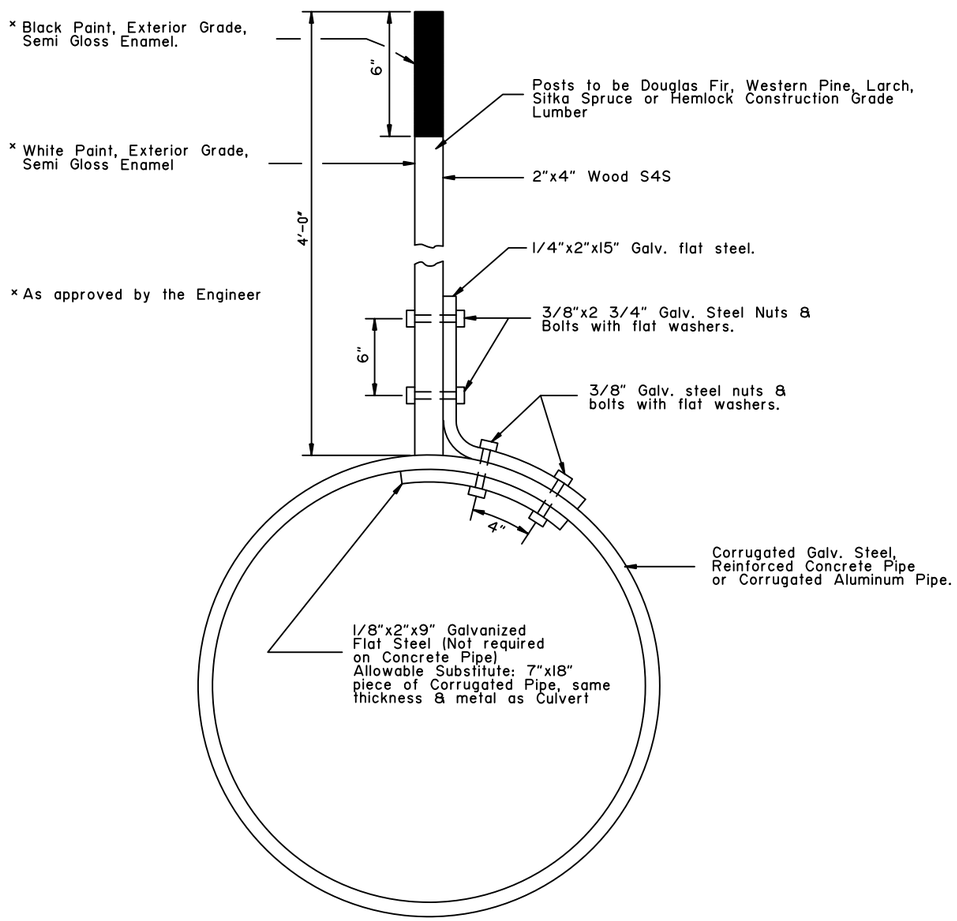


END VIEW

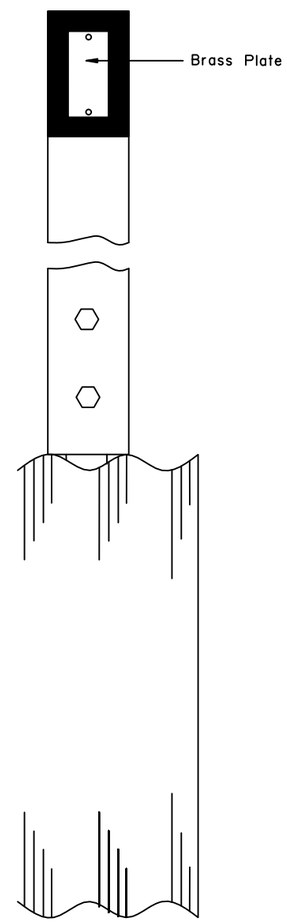


SIDE VIEW

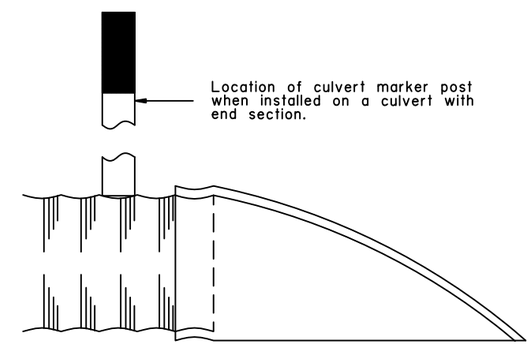


END SECTION SIDE VIEW

State of Alaska DOT&PF
ALASKA STANDARD PLAN

**CULVERT MARKER POST**

Adopted as an Alaska Standard Plan by: Kenneth J. Fisher, P.E.
Chief Engineer

Adoption Date: 02/08/2019

Last Code and Stds. Review
By: Date:

Next Code and Standards Review date: 02/08/2029

# D-11.01

SHEET 1 of 1

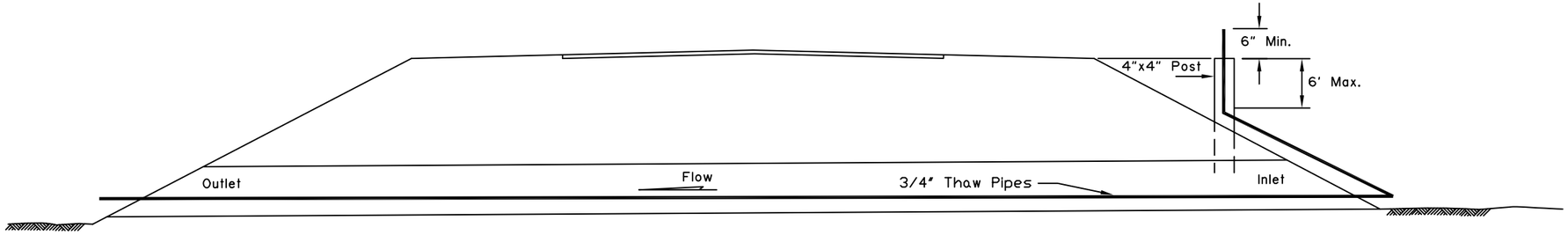


CROSS-SECTION

## GENERAL NOTES:

1. 3/4" main line and standpipes to be liquid tight and filled with 50-50 antifreeze.
2. Standpipe support posts to be installed not more than 6'-0" below shoulder.
3. Thaw pipes to be attached to culvert at inlet and outlet ends and to post.

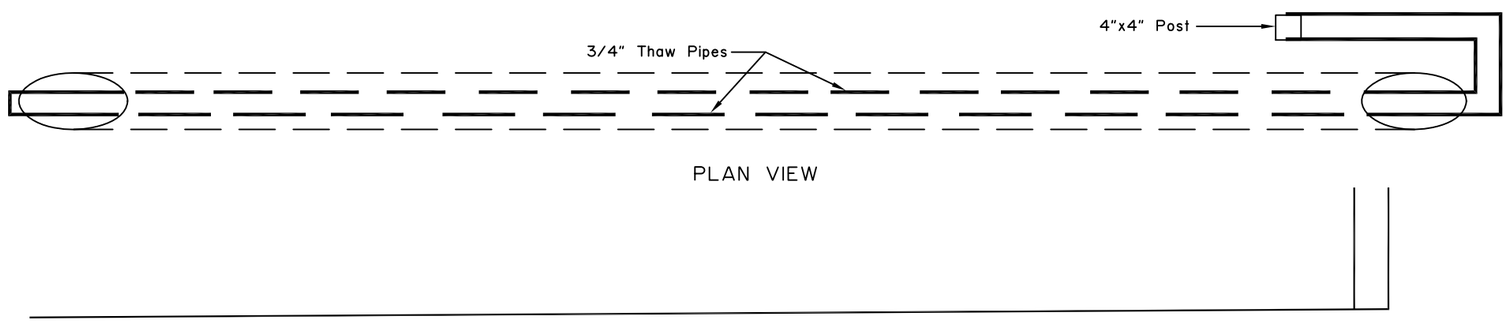


PLAN VIEW

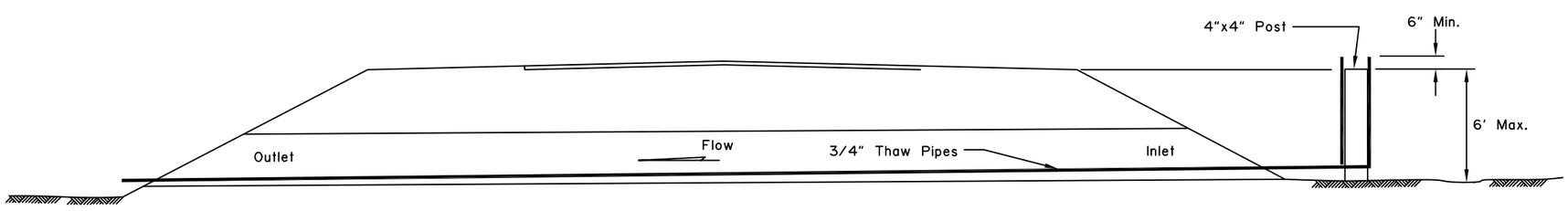


CROSS-SECTION

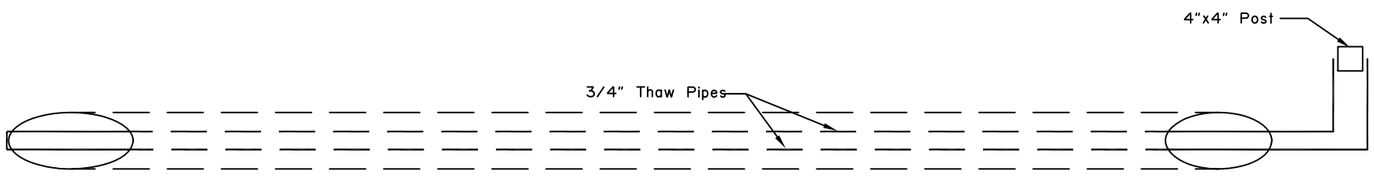


PLAN VIEW

State of Alaska DOT&PF
ALASKA STANDARD PLAN

**CULVERT CIRCULATING THAW PIPE**

Adopted as an Alaska Standard Plan by: Kenneth J. Fisher, P.E.
Chief Engineer

Adoption Date: 02/08/2019

Last Code and Stds. Review
By: Date:

Next Code and Standards Review date: 02/08/2029

D-11.01

# D-13.10

SHEET 1 of 2

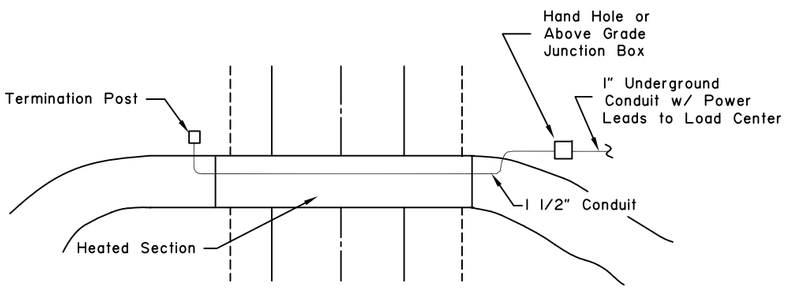


PLAN

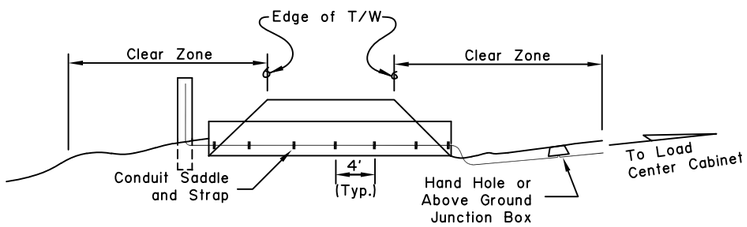


PROFILE

TYPICAL SITE PLAN

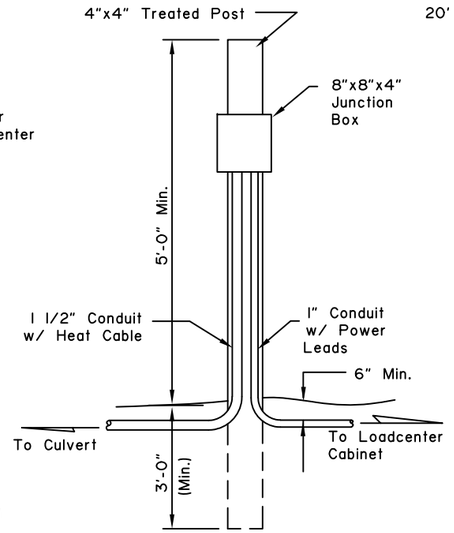


ABOVE GRADE JUNCTION BOX

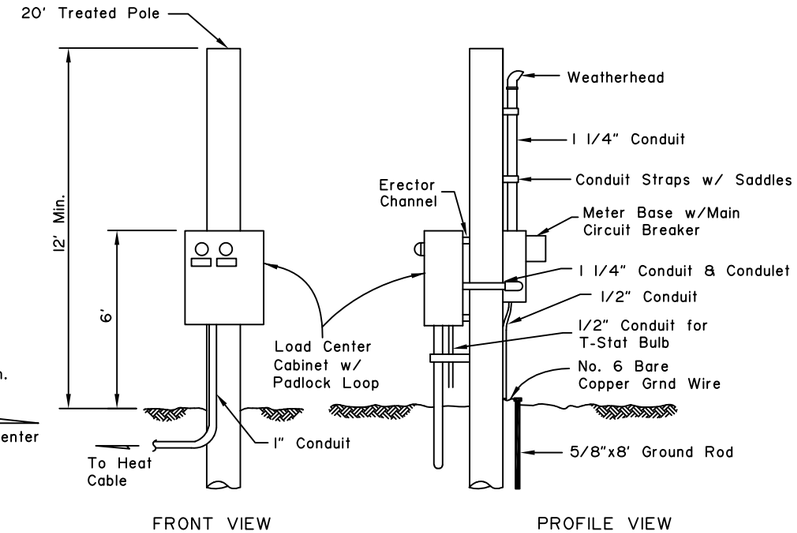


OVERHEAD SERVICE DETAIL

## GENERAL NOTES:

1. Load Center Cabinet shall be located outside of the clear zone and above high water.
2. Caution Sign shall be mounted to the side of treated posts facing highway at the culvert entry and exit and at the Loadcenter Cabinet.
3. See Alaska Highway Preconstruction Manual for 'Clear Zone' requirements.
4. Junction boxes shall be used in place of hand holes at wet locations and shall be mounted at 48" or at 24" above high water if greater than 48".

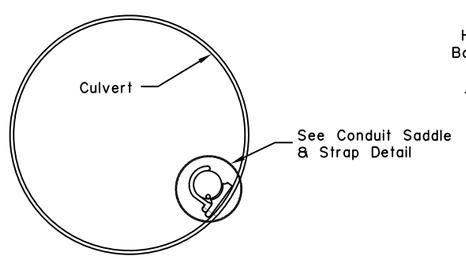


CULVERT CROSS SECTION

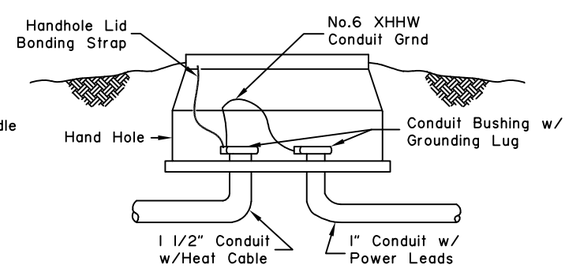


HAND HOLE DETAIL

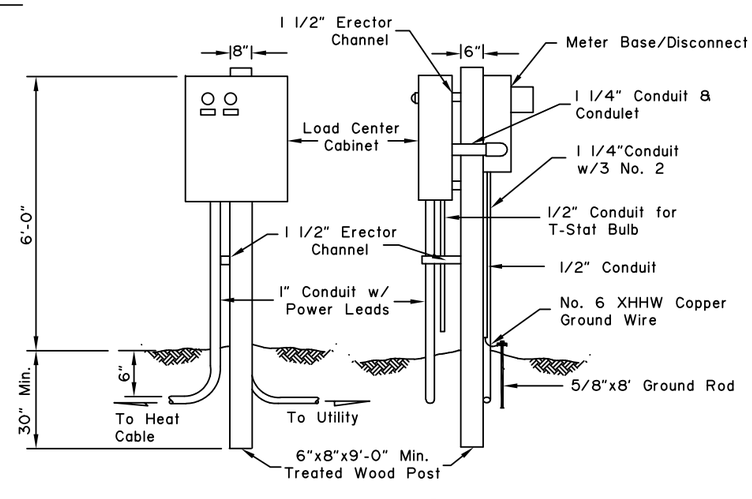


UNDERGROUND SERVICE DETAIL

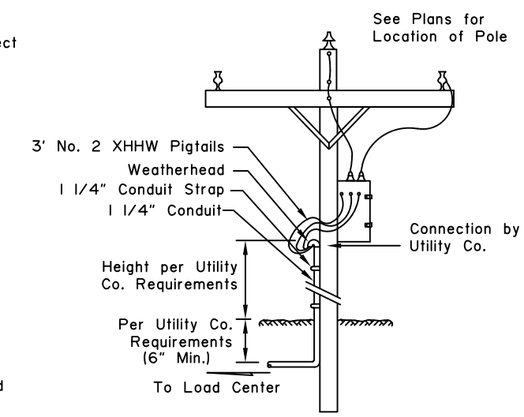


UNDERGROUND SERVICE POLE RISER DETAIL

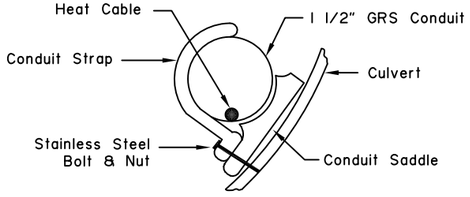


CONDUIT SADDLE & STRAP DETAIL

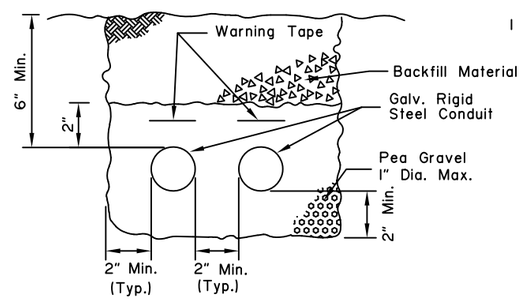


POWER LEAD TRENCH SECTION

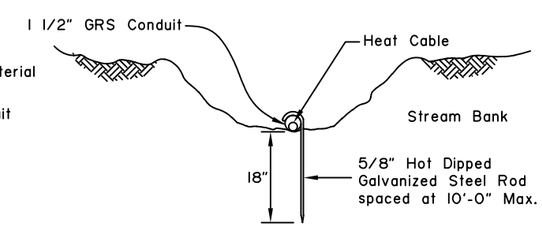


HEAT CABLE TRENCH DETAIL

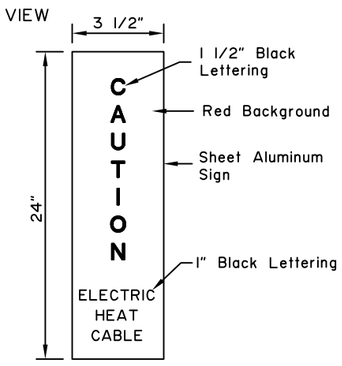


CAUTION SIGN

State of Alaska DOT&PF
ALASKA STANDARD PLAN

**CULVERT THAW WIRE INSTALLATION**

Adopted as an Alaska Standard Plan by: Kenneth J. Fisher, P.E. Chief Engineer

Adoption Date: 02/08/2019

Last Code and Stds. Review
By: Date:

Next Code and Standards Review date: 02/08/2029

D-13.10

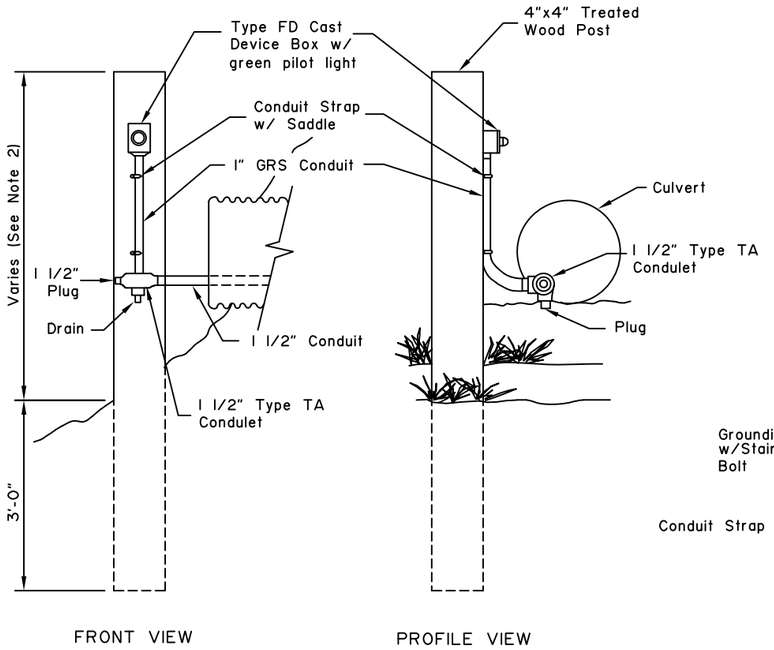


TERMINATION POST DETAIL

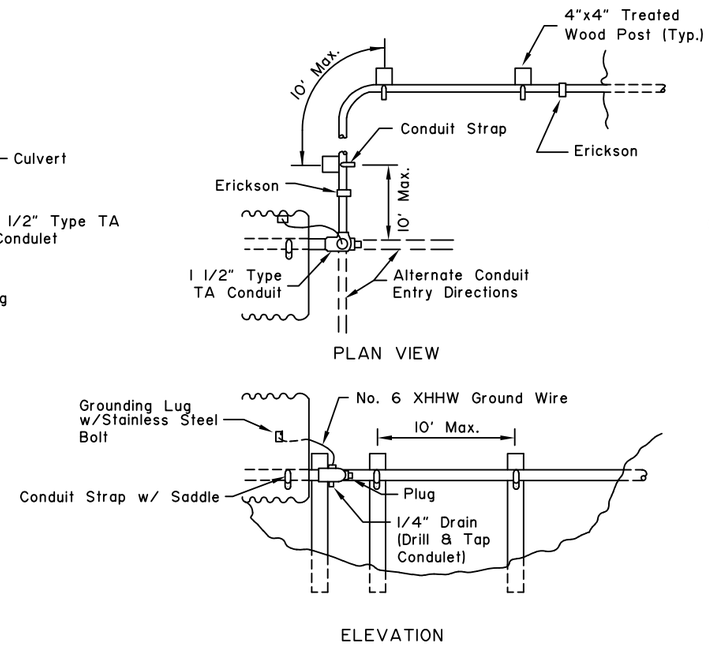


CULVERT ENTRY DETAIL

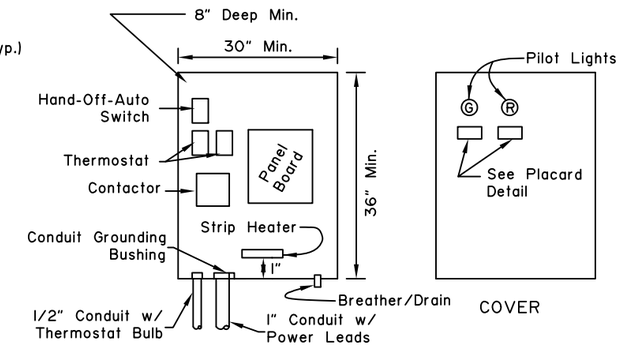


LOAD CENTER CABINET

(NEMA 4 Cabinet w/ Drip Shield)

| HEAT CABLE ON | HEAT CABLE OFF |
|---|---|

PLACARD DETAIL

## GENERAL NOTES:

1. Loadcenter Cabinet panel face shall be placed parallel with the highway.
2. Type FD Cast Device Box w/green pilot light on the termination post shall be located a minimum of 6" above high water.

| SIZE | MAX. LENGTH |
|---|---|
| 15/2 | 175 Ft. |
| 20/2 | 240 Ft. |
| 30/2 | 320 Ft. |
| 40/2 | 415 Ft. |

CIRCUIT BREAKER SIZING TABLE

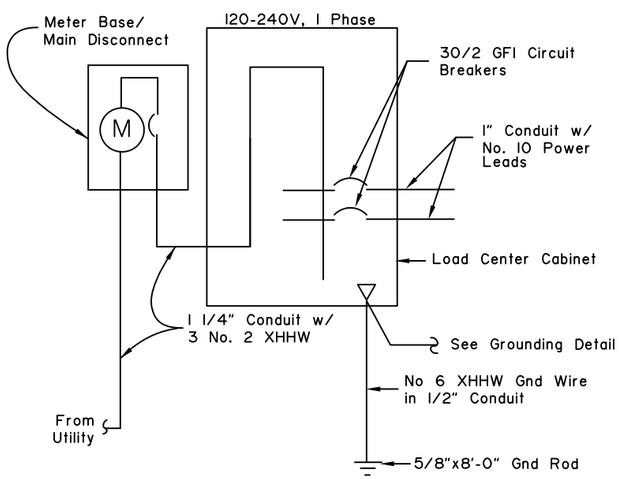


SINGLE LINE DIAGRAM

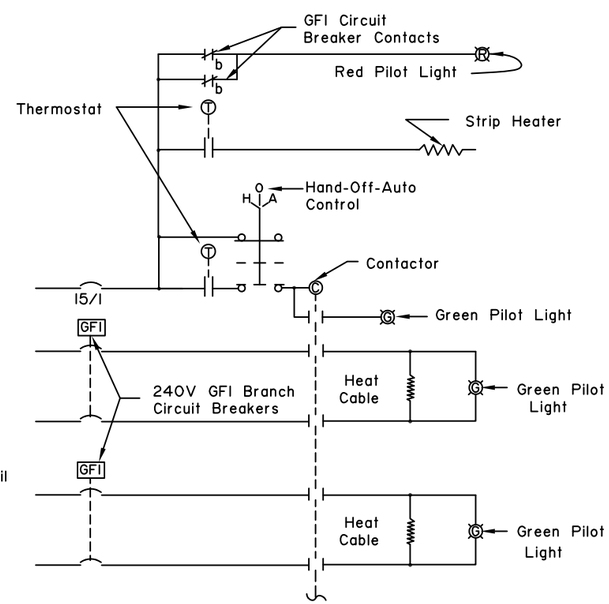


CONTROLS DIAGRAM

NOTE: May use same scheme for other quantities of Heat Cable Circuits.

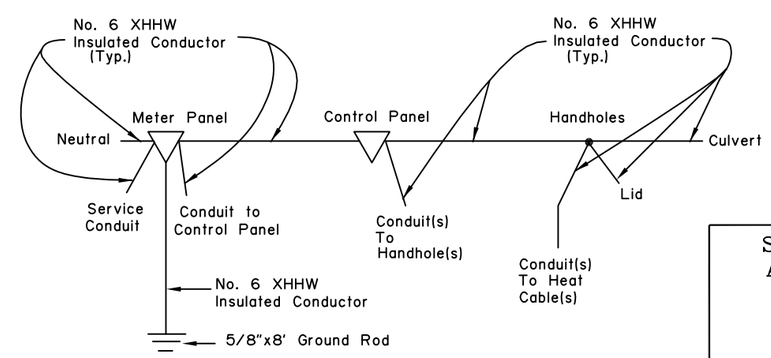


GROUNDING DETAIL

State of Alaska DOT&PF
ALASKA STANDARD PLAN

**CULVERT THAW WIRE INSTALLATION**

Adopted as an Alaska Standard Plan by: Kenneth J. Fisher, P.E. Chief Engineer

Adoption Date: 02/08/2019

Last Code and Stds. Review
By: Date:

Next Code and Standards Review date: 02/08/2029

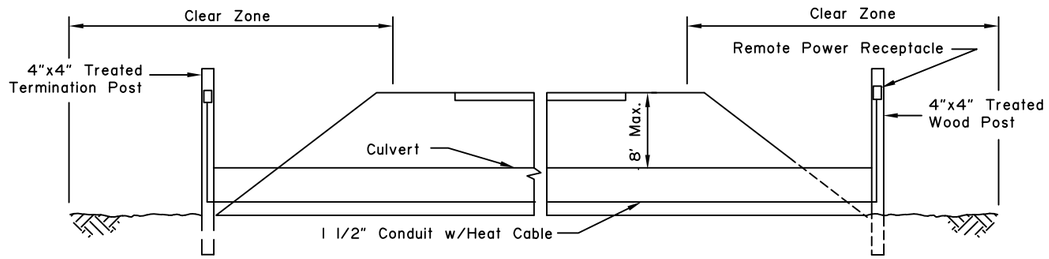


SECTION THRU CULVERT
(Low Fill)

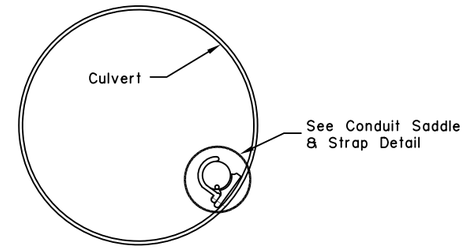


CULVERT CROSS SECTION

## GENERAL NOTES:

1. Type FD Cast Device Box w/green pilot light on the termination post shall be located a minimum of 6" above high water.

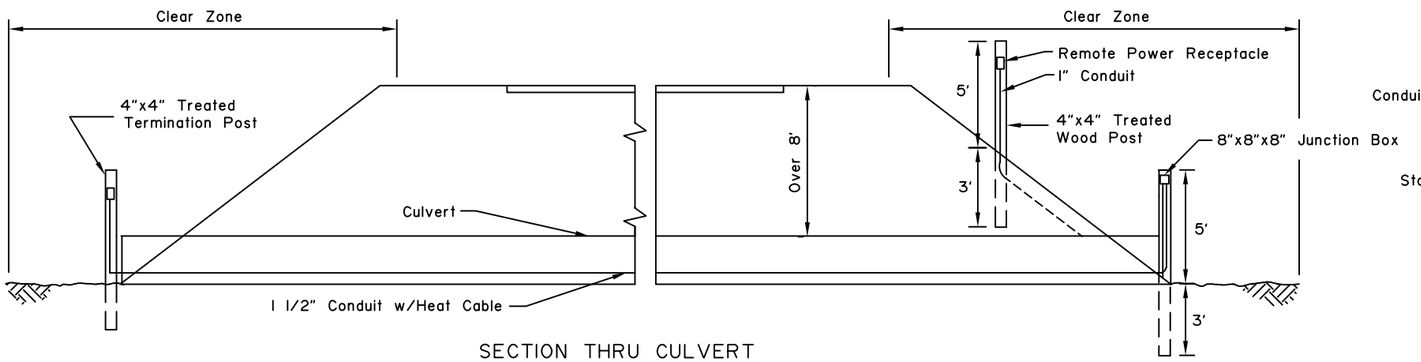


SECTION THRU CULVERT
(High Fill)

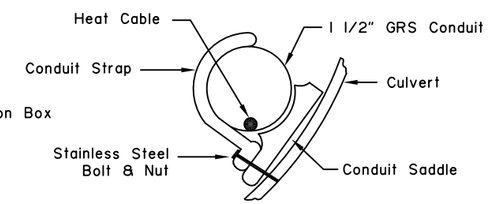


CONDUIT SADDLE & STRAP DETAIL

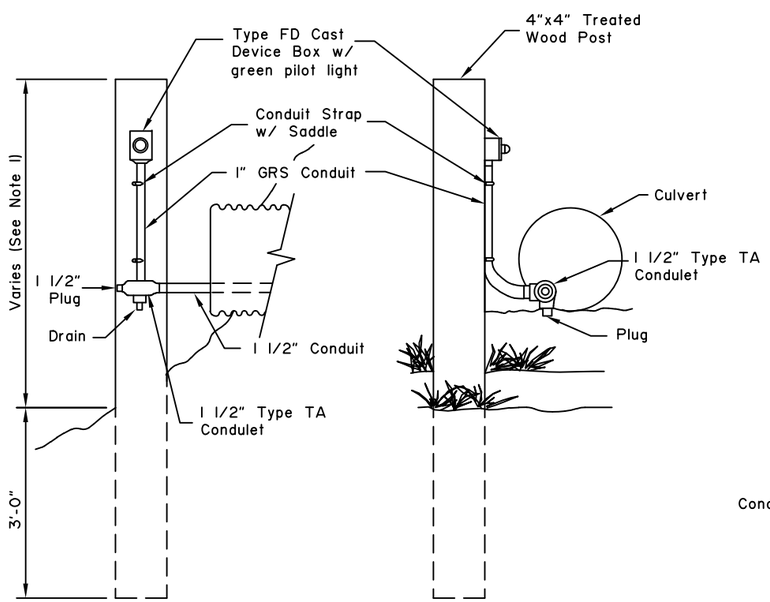


FRONT VIEW PROFILE VIEW

TERMINATION POST DETAIL

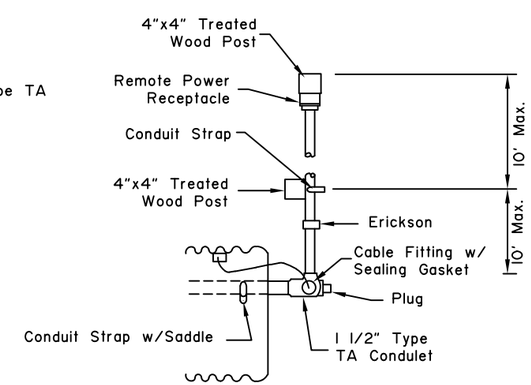


PLAN VIEW

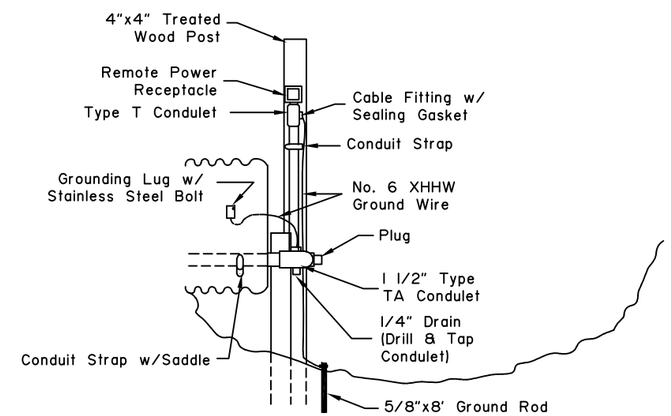


ELEVATION

REMOTE CULVERT ENTRY DETAIL

State of Alaska DOT&PF
ALASKA STANDARD PLAN

**REMOTE THAW WIRE INSTALLATION**

Adopted as an Alaska Standard Plan by: Kenneth J. Fisher, P.E.
Chief Engineer

Adoption Date: 02/08/2019

Last Code and Stds. Review
By: Date:

Next Code and Standards Review date: 02/08/2029

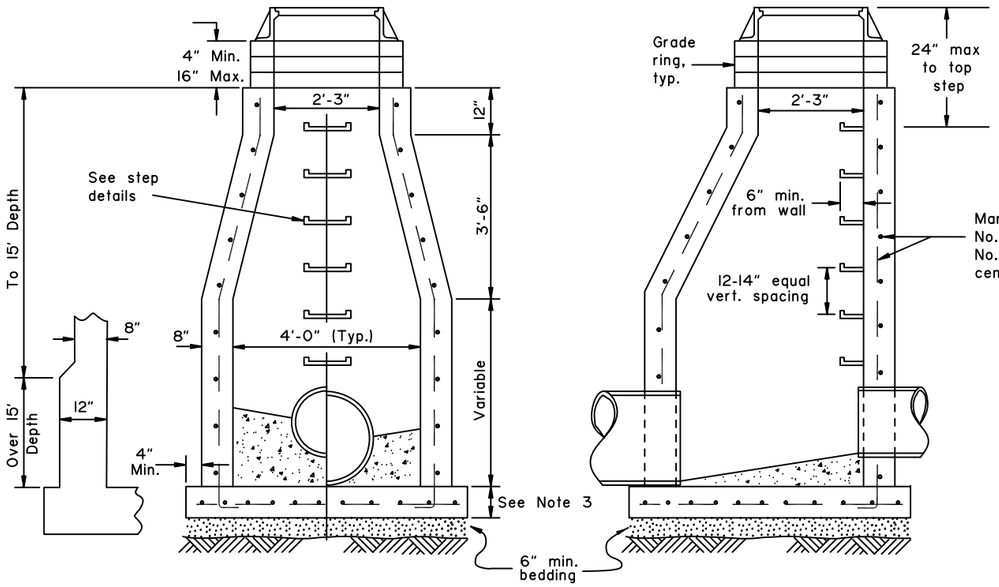


CAST-IN-PLACE MANHOLE

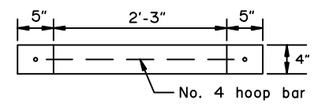


GRADE RING

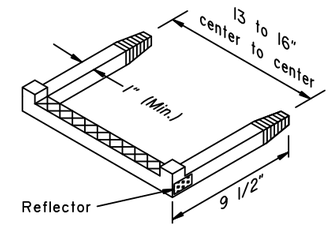


STEP DETAIL

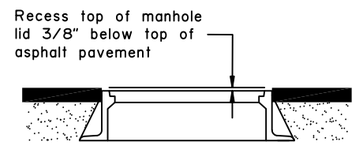


MANHOLE IN PAVEMENT

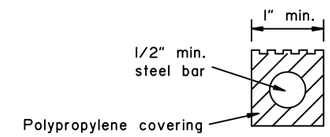


STEP CROSS SECTION

## GENERAL NOTES:

1. Either precast or cast-in-place manholes may be used.
2. Details for manhole frame, cover and step are generic in nature and may vary from shown depending on manufacturer
3. Use 8" thick cast-in-place concrete bases for depths less than 15' and 12" thick bases for depths 15' or greater.
4. Manhole frames shall have a depth of 6" unless otherwise indicated on the plans.
5. Step requirements:
   a. 18" max. vertical clearance to bottom of manhole or concrete invert.
   b. 3" minimum embedment.
   c. 1,500 lb. min. pullout force.
   d. ASTM A-615 grade 60 steel bar.
   e. Injection molded polypropylene covering meeting ASTM D-41010
   f. Slip resistant foot tread with "wings" to prevent feet from sliding off the edge.
   g. Reflectors at step corners
6. Reinforcement for precast manhole sections shall meet AASHTO M 199.

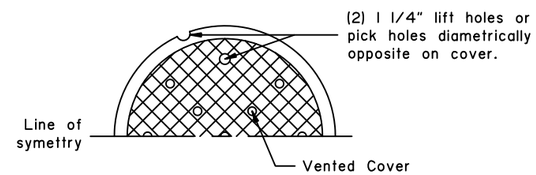


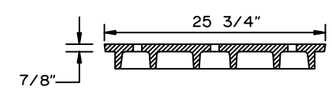


MANHOLE COVER

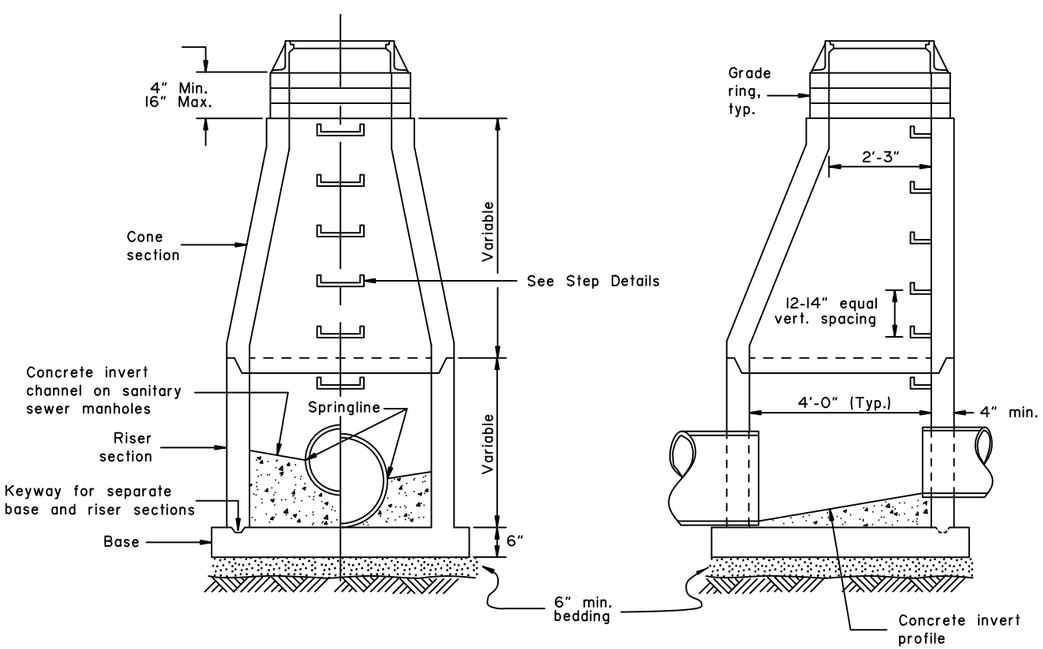


PRECAST CONCRETE MANHOLE

Reinforcement not shown for clarity
See Note 6

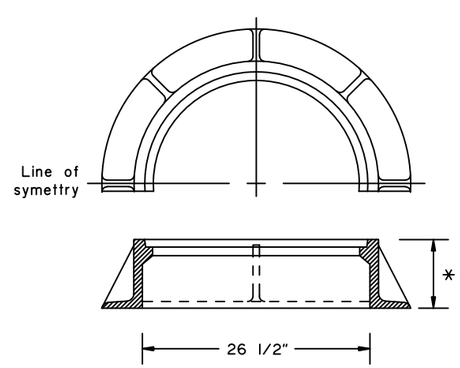


MANHOLE FRAME

| MANHOLE FRAME & COVER MINIMUM WEIGHT | | |
|---|---|---|
| * Depth | 6" | 380 lbs |
| | 7" | 400 lbs |
| | 8" | 440 lbs |
| | 9" | 470 lbs |
| | 10" | 500 lbs |

State of Alaska DOT&PF
ALASKA STANDARD PLAN

**MANHOLES, FRAME AND COVER**

Adopted as an Alaska Standard Plan by: Kenneth J. Fisher, P.E.
Chief Engineer

Adoption Date: 02/08/2019

Last Code and Stds. Review
By: Date:

Next Code and Standards Review date: 02/08/2029

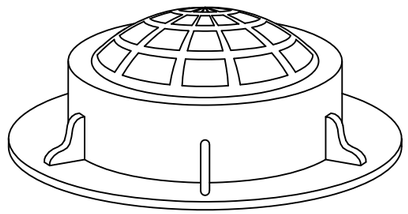

Surround field inlets with a 24" wide rock rubble collar 10" deep, 3" maximum size rock.

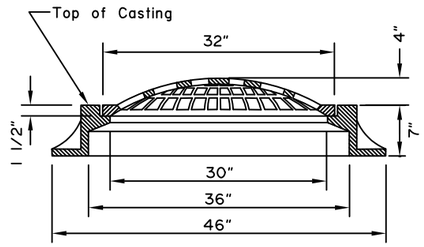


FIELD INLET FRAME & GRATE

To be supplied for storm drain manholes where field inlets are specified. Field inlet frame and grate shall have a Minimum total weight of 525 lb.

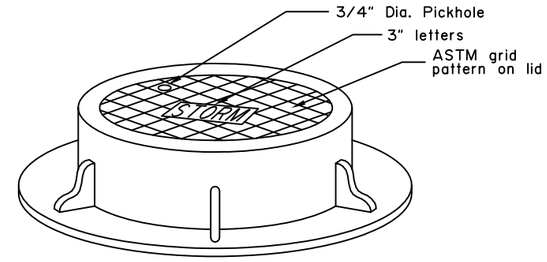


MANHOLE LID FRAME AND GRATE

## NOTES:

1. Details shown are to indicate general design only. Dimensions and design may vary among the manufacturers, except that inlet grate shall be within ¼"± of dimensions shown on this drawing.
2. Manhole lids shall be 32" in diameter and may be used with field inlet frames.
3. Type A field inlet frame inside dimensions shall be 24" x 36". Lugs will not protrude outside the concrete surface of the inlet box.
4. Grates shall be bicycle safe. Where high capacity grates are called for on the plans, they shall conform to Std. Dwg. D-25.
5. Frame and grate casting types are identified by the following abbreviations:
   C.I. = Curb Inlet
   F.I. = Field Inlet
   M.H. = Manhole
6. Flowline depression shall conform to Std. Dwg. D-23 for an on grade or sag point conditions.
7. These are the default frames and grates to be used unless shown otherwise on the drainage plans or drainage structure summary.

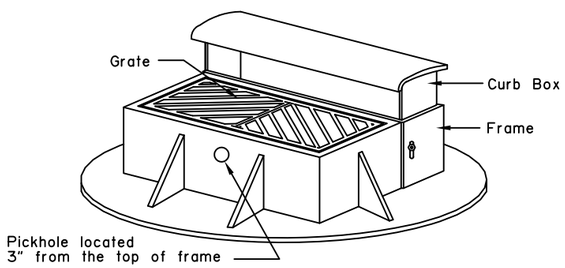


NOTE:
Curb Box, Grate and frame shall have a minimum total weight of 725 lb.

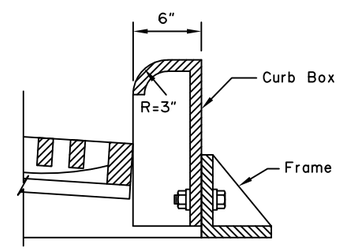


SIDE VIEW
MOUNTABLE CURB AND GUTTER

| REQUIRED FRAME AND GRATES (See Note 7) | | | |
|---|---|---|---|
| STRUCTURE | INLET TYPE | CURB TYPE | TYPE FRAME AND GRATE |
| INLET BOX, TYPE A | Curb | Mountable | Standard Curb Inlet |
| | Curb | Expressway | Mountable Curb Inlet |
| | Curb | Rolled Curb | Depressed Inlet |
| | Field | ------ | Field Inlet |
| STORM DRAIN MANHOLES, TYPE I, II AND III | Curb | Mountable | Mountable Curb Inlet |
| | Curb | Expressway | Expressway Curb Inlet |
| | Curb | Rolled Curb | Depressed Inlet |
| | Field | ------ | Field Inlet |
| | Manhole Lids | ------ | Field Inlet Frame, Solid MH. Lid |

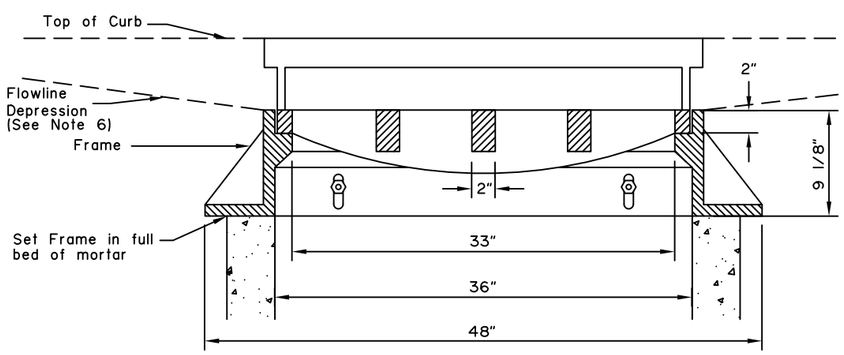


FRONT VIEW

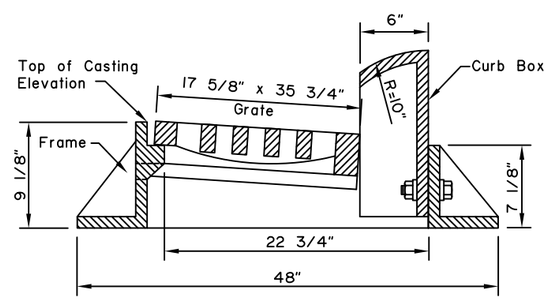


SIDE VIEW
EXPRESSWAY CURB AND GUTTER

CURB INLET FRAME AND GRATE

To be supplied for storm drain manholes Type I, Type II and Type III where curb inlets are specified.

NOT TO SCALE

State of Alaska DOT&PF
ALASKA STANDARD PLAN

**STORMDRAIN MANHOLE FRAME AND GRATE DETAILS**

Adopted as an Alaska Standard Plan by: Kenneth J. Fisher, P.E.
Chief Engineer

Adoption Date: 02/08/2019

Last Code and Stds. Review
By: Date:

Next Code and Standards Review date: 02/08/2029

D-22.01

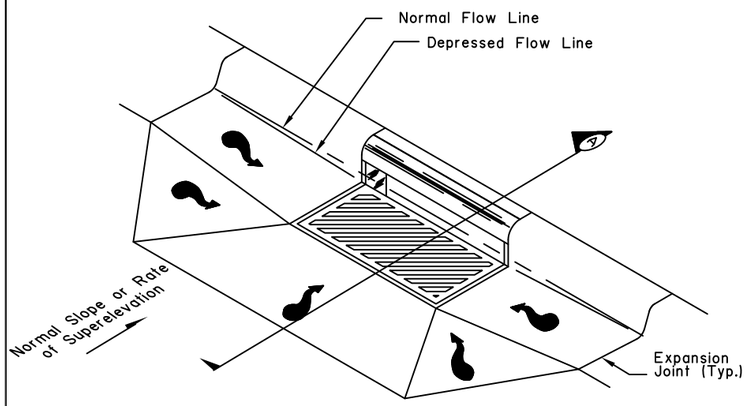


STANDARD CURB INLET INSTALLATION

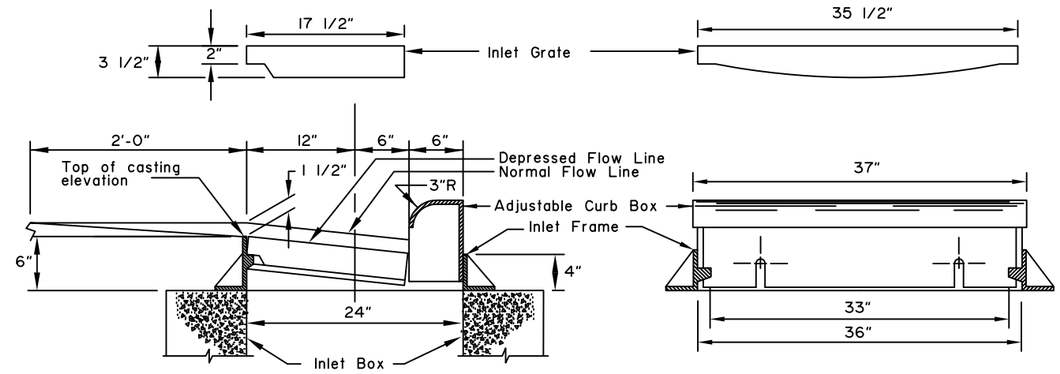


SECTION A

## GENERAL NOTES:

1. Details shown are to indicate general design only. Dimensions and design may vary among the manufacturers.
2. Minimum casting weight shall be 330 lbs for Curb Inlet Frame with Curb Box and 200 lbs. for Inlet Grate.
3. The outside dimensions of Inlet Grate shall be 35 1/2" x 17 1/2" and all grates shall be inter-changeable.
4. Minimum drainage area of Inlet Grate shall be 255 square inches.
5. Inlet Grate type G-3R or G-3L shall be used in all cases except where drainage is from both directions, in which case type G-4 shall be used.

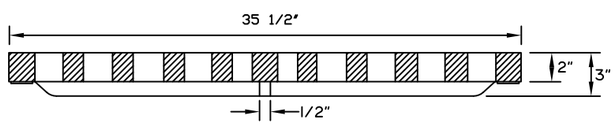


SECTION C-C

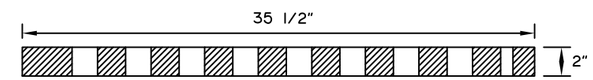


SECTION B-B

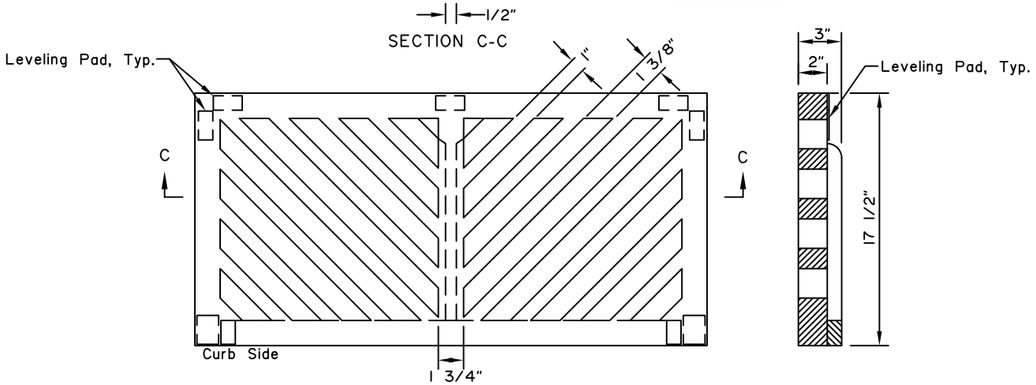


G4

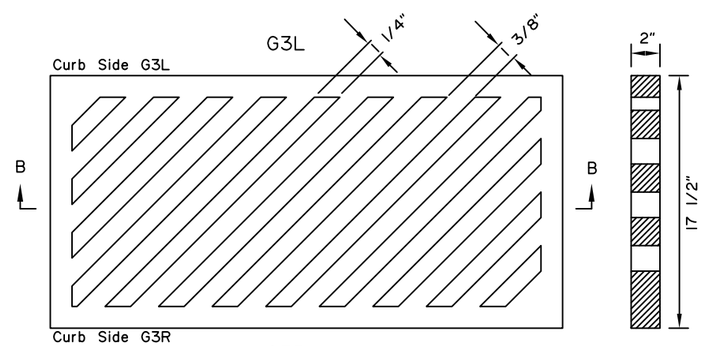


G3R

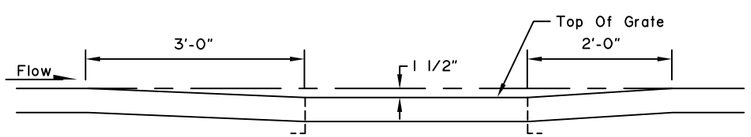


ON GRADE

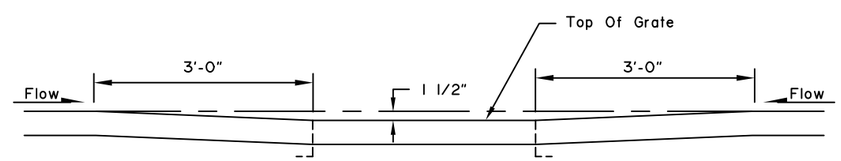


AT LOW POINT

DEPRESSION IN FLOW LINE AT INLET CONSTRUCTION DETAILS

NOT TO SCALE

State of Alaska DOT&PF
ALASKA STANDARD PLAN

**CURB INLET BOX, FRAME & GRATE**

Adopted as an Alaska Standard Plan by: Kenneth J. Fisher, P.E.
Chief Engineer

Adoption Date: 02/08/2019

Last Code and Stds. Review
By: Date:

Next Code and Standards Review date: 02/08/2029

# D-24.00

SHEET 1 of 1

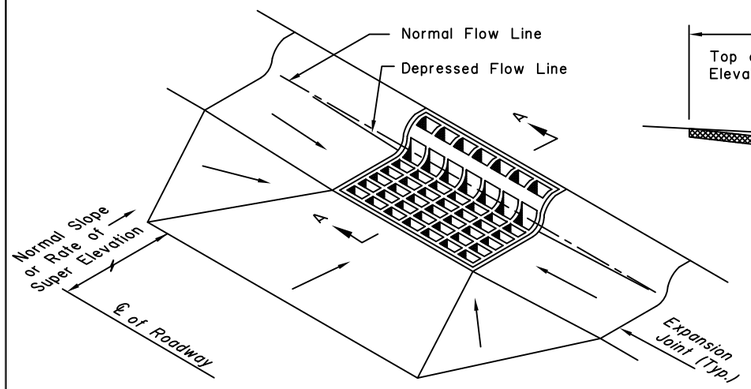


MOUNTABLE CURB INLET INSTALLATION

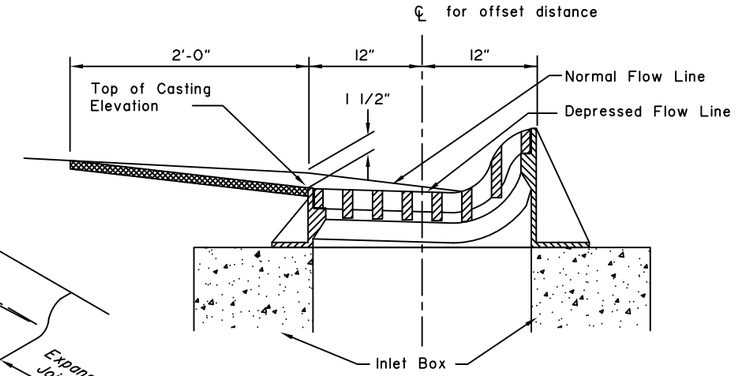


SECTION A-A

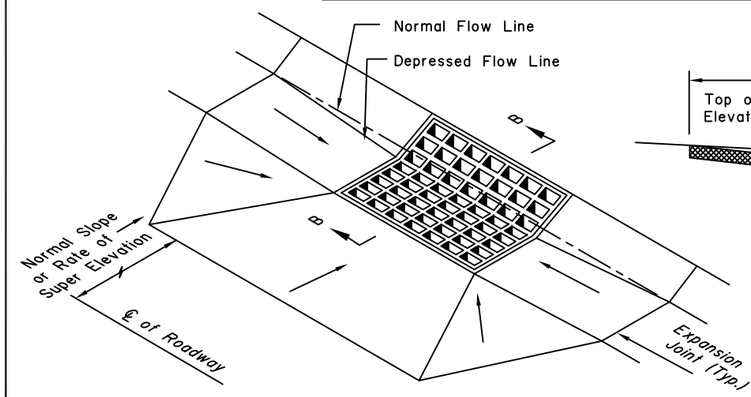


DEPRESSED CURB INLET INSTALLATION

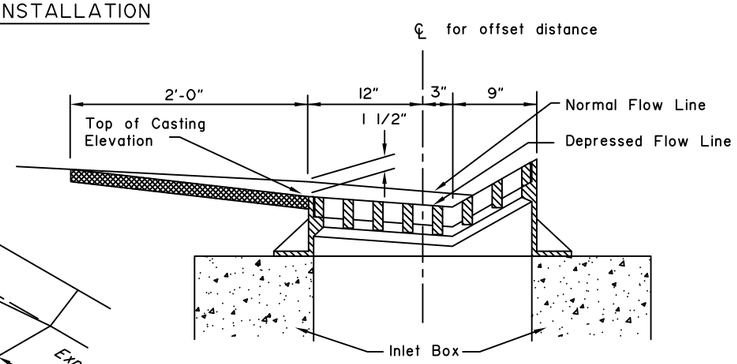


SECTION B-B

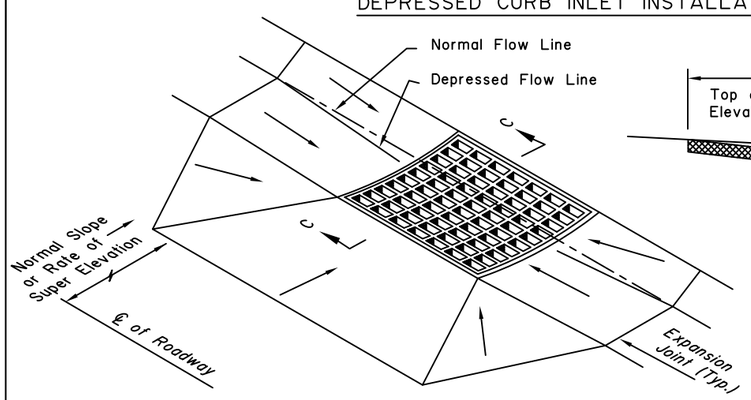


GUTTER INLET INSTALLATION

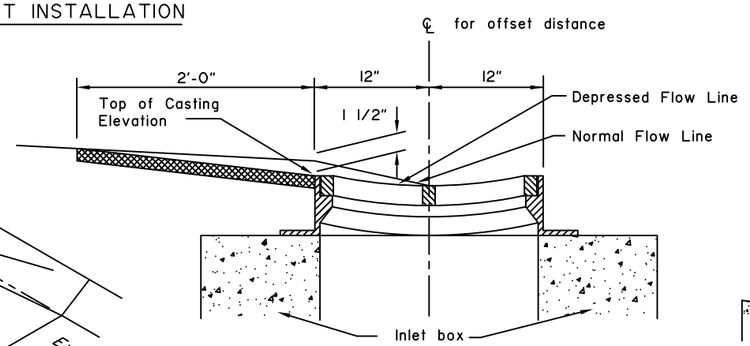


SECTION C-C

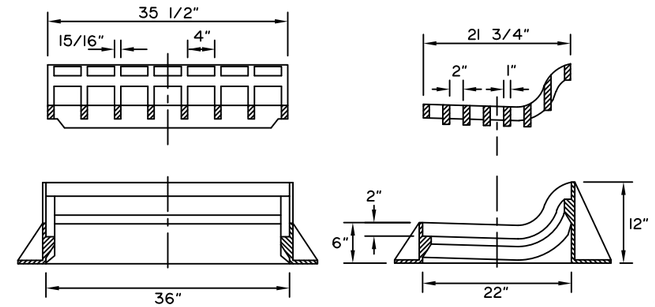


MOUNTABLE CURB INLET FRAME AND GRATE

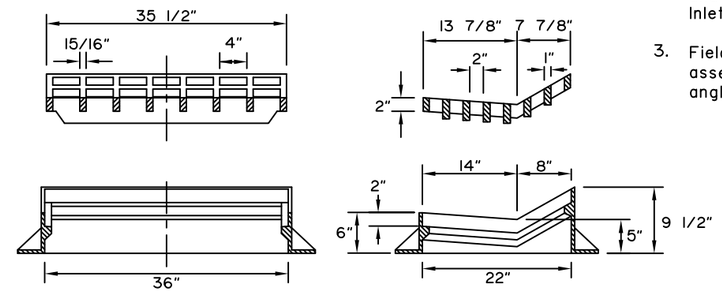


DEPRESSED CURB INLET FRAME AND GRATE

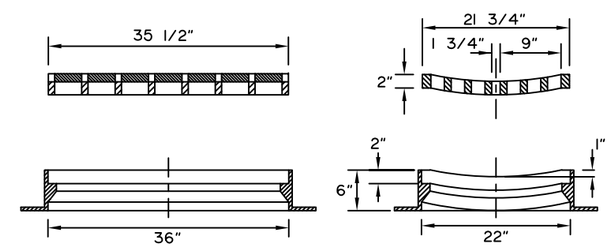


GUTTER INLET FRAME AND GRATE

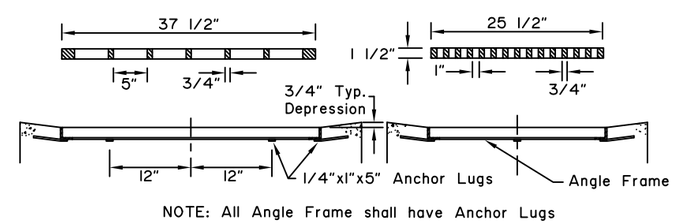


NOTE: All Angle Frame shall have Anchor Lugs

FIELD INLET FRAME AND GRATE

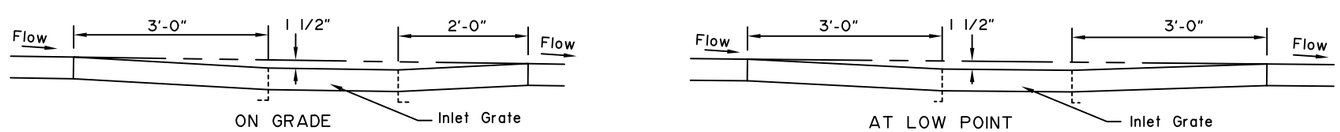


DEPRESSION IN FLOW LINE AT INLET CONSTRUCTION DETAILS

## GENERAL NOTES:

1. Details shown are to indicate general design only. Dimensions and design may vary among the manufacturers. Except inlet grate outside dimension shall be as shown on this drawing.
2. Minimum casting weight shall be 550lbs. for Curb Inlet Frame and Grate, 450lbs. for Gutter Inlet Frame and Grate, and 300lbs. for Field Inlet Frame and Grate.
3. Field Inlet Frame may be welded assembly of L 1 3/4"x1 3/4"x1/4" angle equivalent to ASTM A-36 steel.

State of Alaska DOT&PF
ALASKA STANDARD PLAN

**INLET FRAMES AND GRATES**

Adopted as an Alaska Standard Plan by: Kenneth J. Fisher, P.E.
Chief Engineer

Adoption Date: 02/08/2019

Last Code and Stds. Review
By: Date:

Next Code and Standards Review date: 02/08/2029

D-24.00

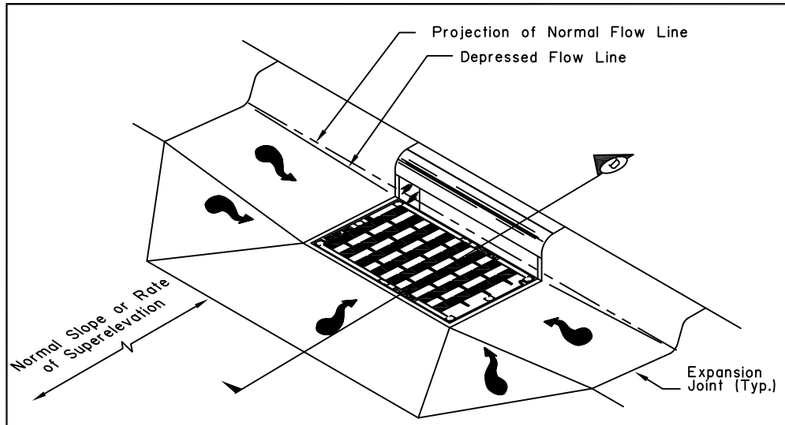


STANDARD CURB INLET INSTALLATION

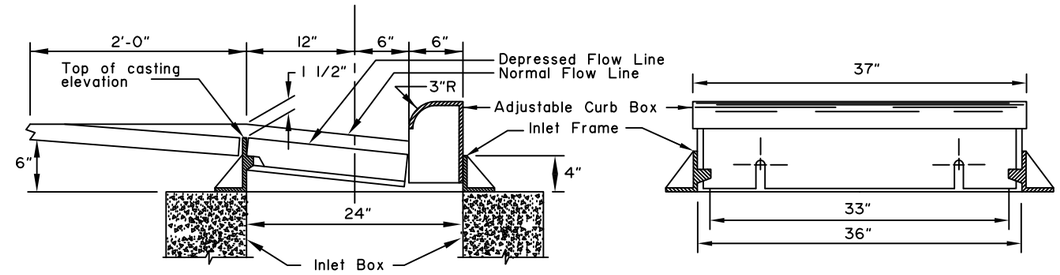


SECTION D

NOTES:

1. Details shown are to indicate general design only. Dimensions and design may vary among the manufacturers.
2. Minimum casting weight shall be 330 lbs for Curb Inlet Frame with Curb Box and 150 lbs. for Inlet Grate.
3. The outside dimensions of Inlet Grate shall be 35 1/2" x 17 1/2" and all grates shall be interchangeable.

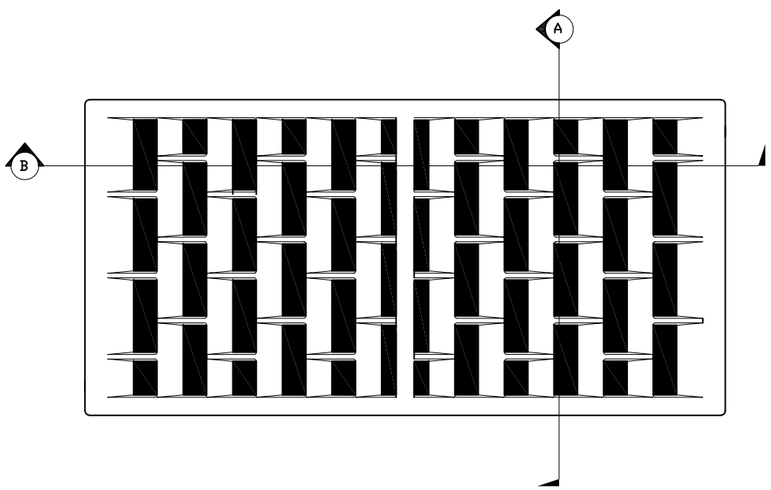


PLAN VIEW

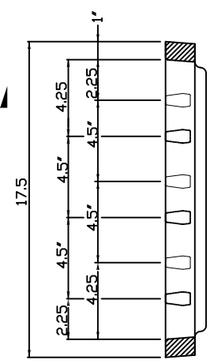


SECTION A

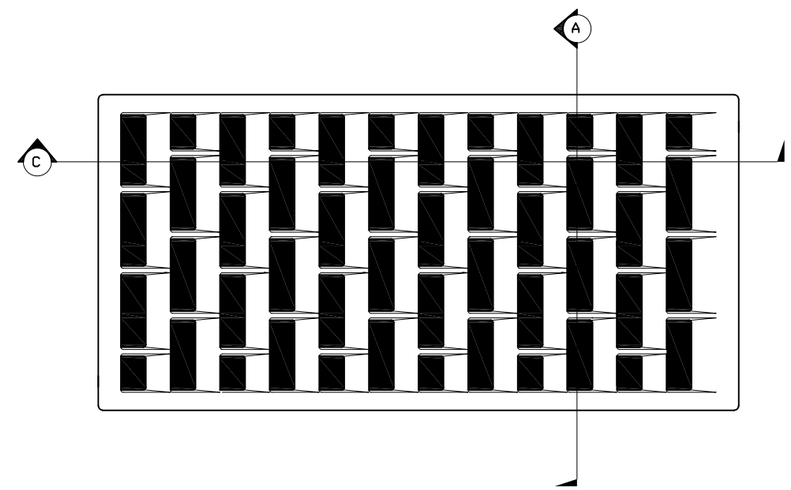


PLAN VIEW

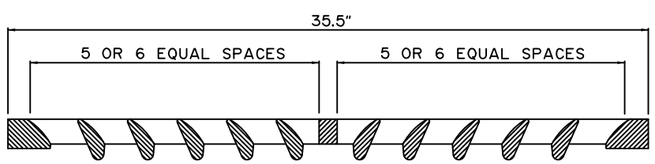


SECTION B

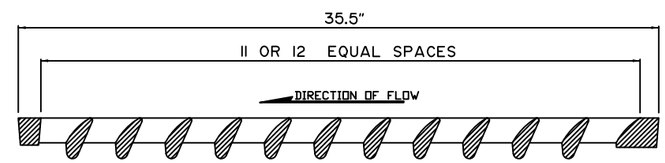


SECTION C

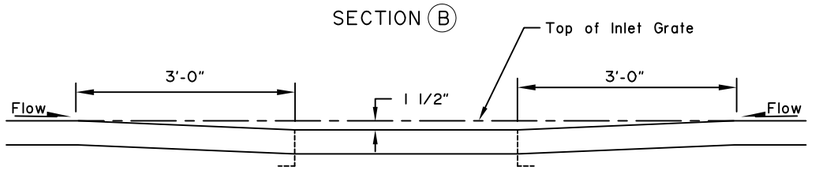


AT SAG POINT

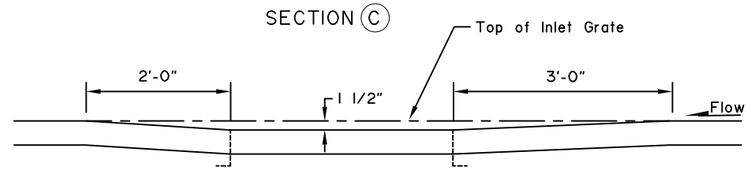


ON GRADE

DEPRESSION IN FLOW LINE AT INLET CONSTRUCTION DETAILS

NOT TO SCALE

State of Alaska DOT&PF
ALASKA STANDARD PLAN

**HIGH CAPACITY CURB INLET BOX FRAME AND GRATE**

Adopted as an Alaska Standard Plan by: Kenneth J. Fisher, P.E.
Chief Engineer

Adoption Date: 02/08/2019

Last Code and Stds. Review
By: Date:

Next Code and Standards Review date: 02/08/2029

NOTES:

1. Details shown are to indicate general design only. Dimensions may vary between manufacturers. Tolerance for grate dimension shall be +/- 1", unless otherwise noted.

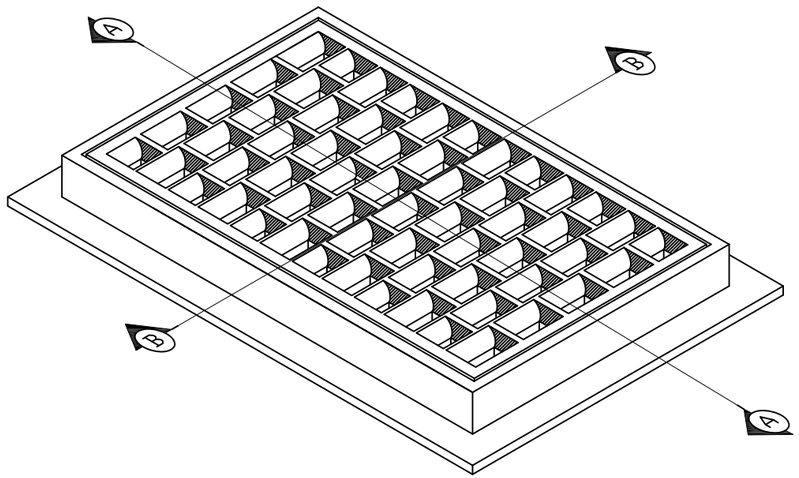


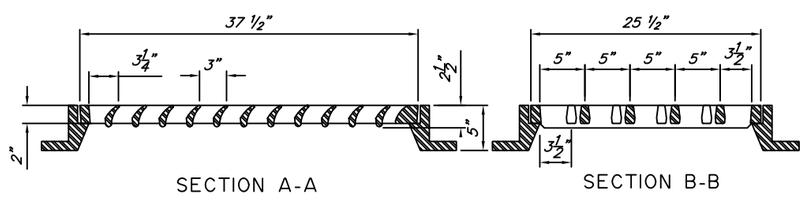


HIGH CAPACITY FIELD INLET FRAME AND GRATE

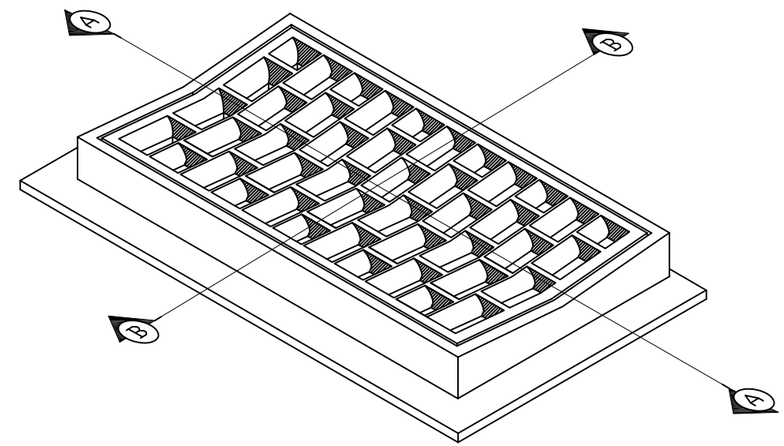


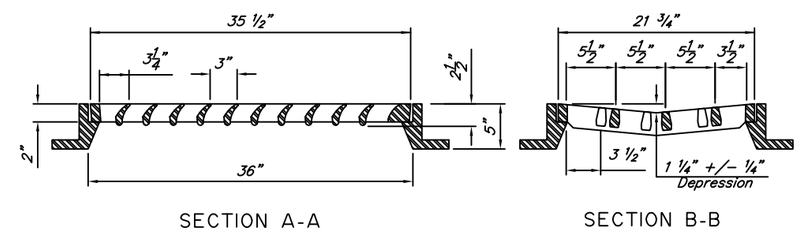


HIGH CAPACITY GUTTER INLET FRAME AND GRATE

NOT TO SCALE

State of Alaska DOT&PF
ALASKA STANDARD PLAN

**HIGH CAPACITY CURB INLET BOX FRAME AND GRATE (FIELD AND GUTTER INLETS)**

Adopted as an Alaska Standard Plan by: Kenneth J. Fisher, P.E.
Chief Engineer

Adoption Date: 02/08/2019

Last Code and Stds. Review
By: Date:

Next Code and Standards Review date: 02/08/2029

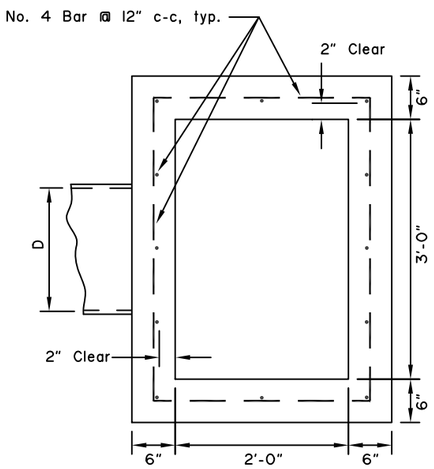


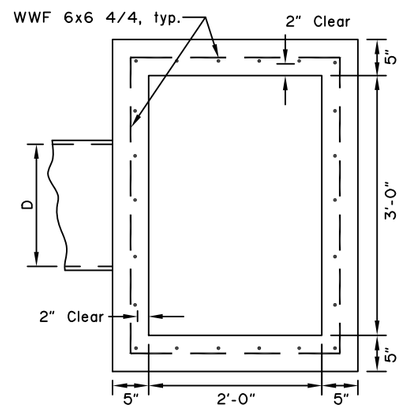


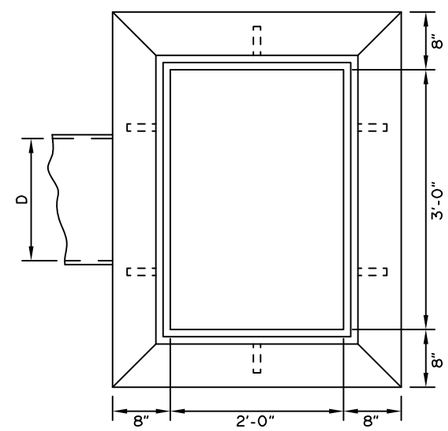


## GENERAL NOTES:

1. Install inlet boxes parallel to the curb line.
2. The plans will indicate which inlet boxes require a sump.
3. Shape floors to drain.
4. Use Grade 40 minimum reinforcing steel.
5. The plans will indicate which inlet boxes require sumps.

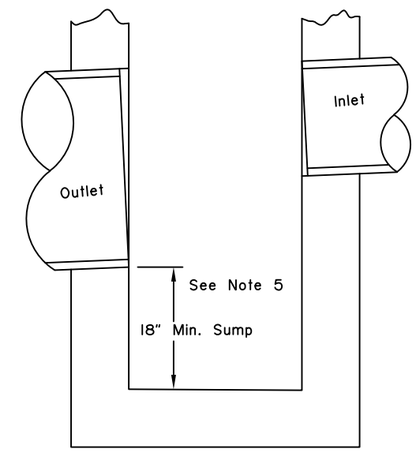


SUMP DETAIL

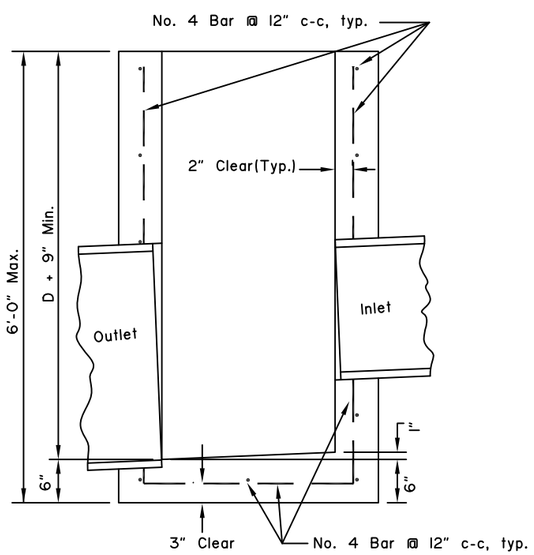


REINFORCED
CAST IN PLACE

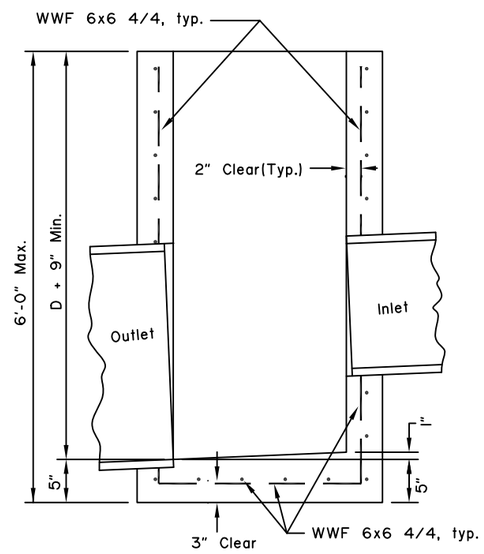


PRECAST

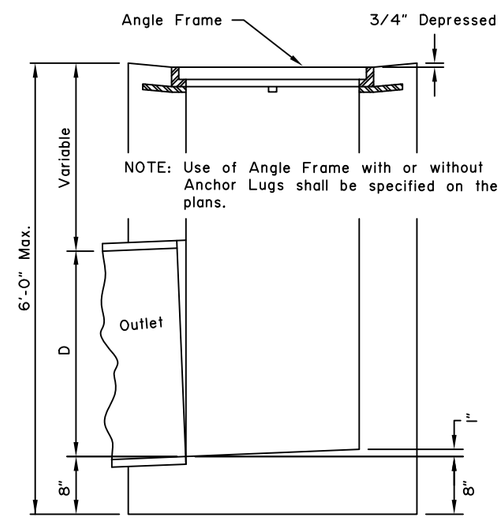


NOTE: Use of Angle Frame with or without Anchor Lugs shall be specified on the plans.

FIELD INLET BOX
CAST* IN PLACE

* May be Precast or Reinforced Cast-In-Place Box.

TYPE "A" CONCRETE INLET BOXES

NOT TO SCALE

State of Alaska DOT&PF
ALASKA STANDARD PLAN

**TYPE "A"**
**INLET BOX**

Adopted as an Alaska Standard Plan by: Kenneth J. Fisher, P.E.
Chief Engineer

Adoption Date: 02/08/2019

Last Code and Stds. Review
By: Date:

Next Code and Standards Review date: 02/08/2029

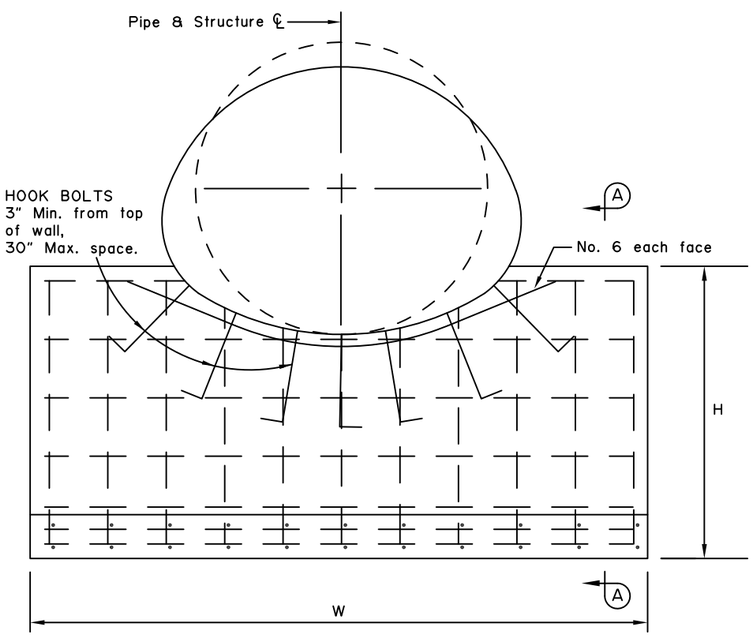


ELEVATION

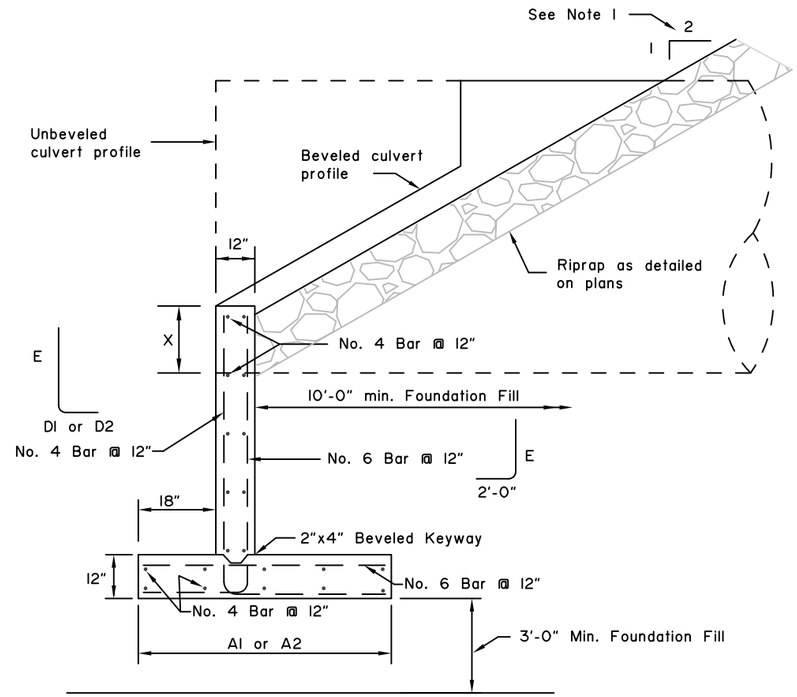


SECTION A-A

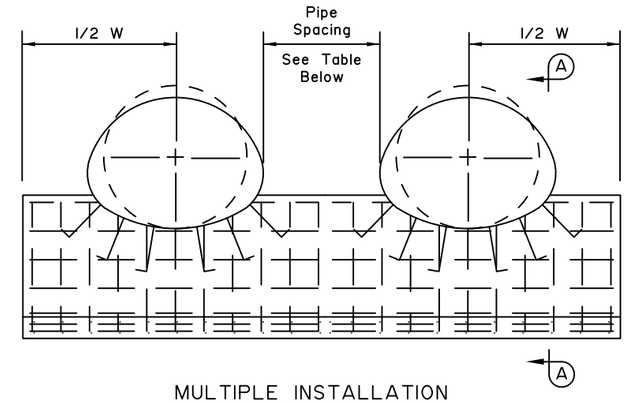


MULTIPLE INSTALLATION

| Minimum Space Between Pipes |
|---|
| 1/2 Dia. of Pipe or 1/2 Span of Pipe Arch, 24" Min. |

| CORRUGATED METAL PIPE ✱ SEE NOTE 11 | | | | | | | |
|---|---|---|---|---|---|---|---|
| Dia. | W | H | A1✱ | A2✱ | D1✱ | D2✱ | E |
| 5'-0" | 9'-0" | 4'-0" | 4'-0" | 4'-0" | 2'-0" | 2'-0" | 3'-6" |
| 5'-6" | 10'-0" | 4'-6" | 4'-0" | 4'-0" | 2'-0" | 2'-0" | 4'-0" |
| 6'-0" | 11'-0" | 4'-6" | 4'-0" | 4'-0" | 2'-0" | 2'-0" | 4'-0" |
| 6'-6" | 12'-0" | 4'-6" | 4'-0" | 4'-0" | 2'-0" | 2'-0" | 4'-0" |
| 7'-0" | 12'-6" | 4'-6" | 4'-0" | 4'-0" | 2'-0" | 2'-0" | 4'-0" |
| 7'-6" | 13'-6" | 5'-0" | 4'-6" | 4'-0" | 2'-6" | 2'-0" | 4'-6" |
| 8'-0" | 14'-6" | 5'-0" | 4'-6" | 4'-0" | 2'-6" | 2'-0" | 4'-6" |
| 8'-6" | 15'-6" | 5'-0" | 4'-6" | 4'-0" | 2'-6" | 2'-0" | 4'-6" |
| 9'-0" | 16'-6" | 5'-6" | 5'-0" | 4'-0" | 3'-0" | 2'-0" | 5'-0" |
| 9'-6" | 17'-0" | 5'-6" | 5'-0" | 4'-0" | 3'-0" | 2'-0" | 5'-0" |
| 10'-0" | 18'-0" | 5'-6" | 5'-0" | 4'-0" | 3'-0" | 2'-0" | 5'-0" |
| 10'-6" | 19'-0" | 5'-6" | 5'-0" | 4'-0" | 3'-0" | 2'-0" | 5'-0" |
| 11'-0" | 20'-0" | 5'-6" | 5'-0" | 4'-0" | 3'-0" | 2'-0" | 5'-0" |
| 11'-6" | 21'-0" | 5'-6" | 5'-0" | 4'-0" | 3'-0" | 2'-0" | 5'-0" |
| 12'-0" | 21'-6" | 5'-6" | 5'-0" | 4'-0" | 3'-0" | 2'-0" | 5'-0" |
| 12'-6" | 22'-6" | 5'-6" | 5'-0" | 4'-0" | 3'-0" | 2'-0" | 5'-0" |
| 13'-0" | 23'-6" | 5'-6" | 5'-0" | 4'-0" | 3'-0" | 2'-0" | 5'-0" |
| 13'-6" | 24'-6" | 6'-0" | 5'-6" | 4'-0" | 3'-6" | 2'-0" | 5'-6" |
| 14'-0" | 25'-6" | 6'-6" | 6'-0" | 4'-0" | 4'-0" | 2'-0" | 6'-0" |
| 14'-6" | 26'-0" | 6'-6" | 6'-0" | 4'-0" | 4'-0" | 2'-0" | 6'-0" |
| 15'-0" | 27'-0" | 6'-6" | 6'-0" | 4'-0" | 4'-0" | 2'-0" | 6'-0" |

| CORRUGATED METAL PIPE ARCH ✱ SEE NOTE 11 | | | | | | | | |
|---|---|---|---|---|---|---|---|---|
| SPAN | RISE | W | H | A1✱ | A2✱ | D1✱ | D2✱ | E |
| 6'-1" | 4'-7" | 14'-0" | 5'-0" | 4'-6" | 4'-0" | 2'-6" | 2'-0" | 4'-6" |
| 6'-4" | 4'-9" | 14'-6" | 5'-0" | 4'-6" | 4'-0" | 2'-6" | 2'-0" | 4'-6" |
| 6'-9" | 4'-11" | 15'-0" | 5'-0" | 4'-6" | 4'-0" | 2'-6" | 2'-0" | 4'-6" |
| 7'-0" | 5'-1" | 15'-6" | 5'-0" | 4'-6" | 4'-0" | 2'-6" | 2'-0" | 4'-6" |
| 7'-3" | 5'-3" | 16'-0" | 5'-0" | 4'-6" | 4'-0" | 2'-6" | 2'-0" | 4'-6" |
| 7'-8" | 5'-5" | 16'-6" | 5'-0" | 4'-6" | 4'-0" | 2'-6" | 2'-0" | 4'-6" |
| 7'-11" | 5'-7" | 17'-0" | 5'-0" | 4'-6" | 4'-0" | 2'-6" | 2'-0" | 4'-6" |
| 8'-2" | 5'-9" | 17'-6" | 5'-0" | 4'-6" | 4'-0" | 2'-6" | 2'-0" | 4'-6" |
| 8'-7" | 5'-11" | 18'-0" | 5'-0" | 4'-6" | 4'-0" | 2'-6" | 2'-0" | 4'-6" |
| 8'-10" | 6'-1" | 18'-6" | 5'-0" | 4'-6" | 4'-0" | 2'-6" | 2'-0" | 4'-6" |
| 9'-4" | 6'-3" | 19'-0" | 5'-0" | 4'-6" | 4'-0" | 2'-6" | 2'-0" | 4'-6" |
| 9'-6" | 6'-5" | 19'-6" | 5'-0" | 4'-6" | 4'-0" | 2'-6" | 2'-0" | 4'-6" |
| 9'-9" | 6'-7" | 20'-0" | 5'-0" | 4'-6" | 4'-0" | 2'-6" | 2'-0" | 4'-6" |
| 10'-3" | 6'-9" | 20'-6" | 5'-0" | 4'-6" | 4'-0" | 2'-6" | 2'-0" | 4'-6" |
| 10'-8" | 6'-11" | 21'-0" | 5'-6" | 5'-0" | 4'-0" | 3'-0" | 2'-0" | 5'-0" |
| 10'-11" | 7'-1" | 21'-6" | 5'-6" | 5'-0" | 4'-0" | 3'-0" | 2'-0" | 5'-0" |
| 11'-5" | 7'-3" | 22'-0" | 5'-6" | 5'-0" | 4'-0" | 3'-0" | 2'-0" | 5'-0" |
| 11'-7" | 7'-5" | 22'-6" | 5'-6" | 5'-0" | 4'-0" | 3'-0" | 2'-0" | 5'-0" |
| 11'-10" | 7'-7" | 23'-0" | 5'-6" | 5'-0" | 4'-0" | 3'-0" | 2'-0" | 5'-0" |
| 12'-4" | 7'-9" | 23'-6" | 5'-6" | 5'-0" | 4'-0" | 3'-0" | 2'-0" | 5'-0" |
| 12'-6" | 7'-11" | 24'-0" | 5'-6" | 5'-0" | 4'-0" | 3'-0" | 2'-0" | 5'-0" |
| 12'-8" | 8'-1" | 24'-6" | 5'-6" | 5'-0" | 4'-0" | 3'-0" | 2'-0" | 5'-0" |
| 12'-10" | 8'-4" | 25'-0" | 5'-6" | 5'-0" | 4'-0" | 3'-0" | 2'-0" | 5'-0" |
| 13'-5" | 8'-5" | 25'-6" | 5'-6" | 5'-0" | 4'-0" | 3'-0" | 2'-0" | 5'-0" |
| 13'-11" | 8'-7" | 26'-0" | 5'-6" | 5'-0" | 4'-0" | 3'-0" | 2'-0" | 5'-0" |
| 14'-1" | 8'-9" | 26'-6" | 5'-6" | 5'-0" | 4'-0" | 3'-0" | 2'-0" | 5'-0" |
| 14'-3" | 8'-11" | 27'-0" | 5'-6" | 5'-0" | 4'-0" | 3'-0" | 2'-0" | 5'-0" |
| 14'-10" | 9'-1" | 27'-6" | 5'-6" | 5'-0" | 4'-0" | 3'-0" | 2'-0" | 5'-0" |
| 15'-4" | 9'-3" | 28'-0" | 5'-6" | 5'-0" | 4'-0" | 3'-0" | 2'-0" | 5'-0" |
| 15'-6" | 9'-5" | 28'-6" | 5'-6" | 5'-0" | 4'-0" | 3'-0" | 2'-0" | 5'-0" |
| 15'-8" | 9'-7" | 29'-0" | 5'-6" | 5'-0" | 4'-0" | 3'-0" | 2'-0" | 5'-0" |
| 15'-10" | 9'-10" | 29'-6" | 5'-6" | 5'-0" | 4'-0" | 3'-0" | 2'-0" | 5'-0" |
| 16'-5" | 9'-11" | 30'-0" | 5'-6" | 5'-0" | 4'-0" | 3'-0" | 2'-0" | 5'-0" |
| 16'-7" | 10'-1" | 30'-6" | 5'-6" | 5'-0" | 4'-0" | 3'-0" | 2'-0" | 5'-0" |

## GENERAL NOTES:

1. For use on 2:1 or flatter backfill slopes only.
2. See plans for pipe beveling requirements. See Std. Dwg. D-07 for "X" dimension and culvert beveling geometry.
3. Use Class A concrete.
4. Use epoxy-coated ASTM A706, Grade 60 reinforcing steel fy=60,000 psi.
5. Place reinforcement 3" clear from surface of concrete unless otherwise noted.
6. Chamfer all exposed concrete corners 3/4".
7. If unsuitable foundation material is encountered, remove and backfill with Foundation Fill as directed by the Engineer.
8. Furnishing and installing hook bolts in place is incidental to Class A concrete.
9. Use galvanized ASTM A307 hook bolts and nuts. Torque culvert nuts to 140 ft-lbs.
10. Headwalls for skewed culverts to be parallel to road centerline. See plans for dimensions of openings in headwalls for skewed culverts.
11. For backfill soil with:
    $\phi$=30°, $\gamma$=130 pcf
    Use A1 and D1
    $\phi$=34°, $\gamma$=135 pcf
    Use A2 and D2

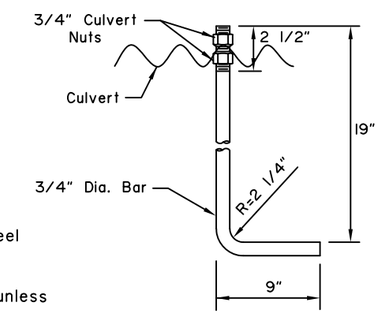


HOOK BOLT

State of Alaska DOT&PF
ALASKA STANDARD PLAN

**HEADWALLS CAST-IN-PLACE TYPE I**

Adopted as an Alaska Standard Plan by: Kenneth J. Fisher, P.E.
Chief Engineer

Adoption Date: 02/08/2019

Last Code and Stds. Review
By: Date:

Next Code and Standards Review date: 02/08/2029

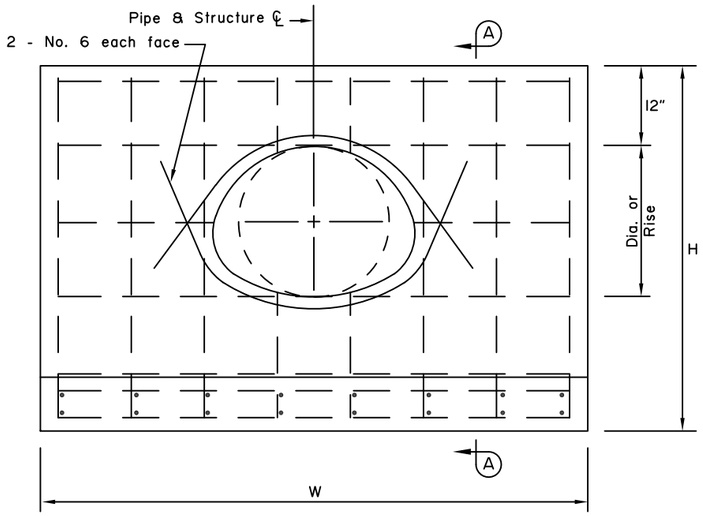


ELEVATION

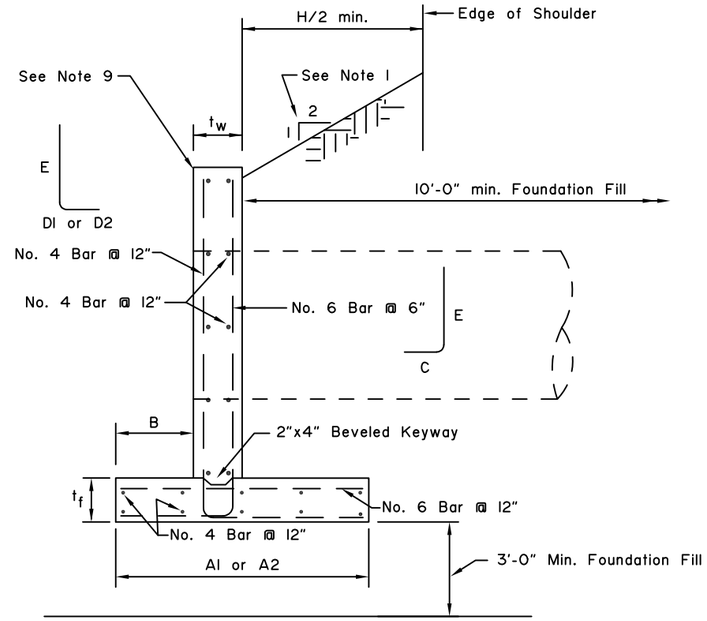


SECTION A-A

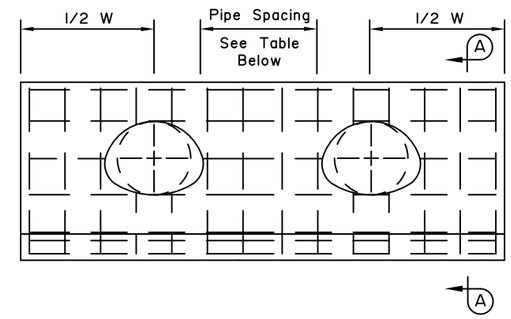


MULTIPLE INSTALLATION

| Minimum Space Between Pipes |
|---|
| 1/2 Dia. of Pipe or 1/2 Span of Pipe Arch, 24" Min. |

| CORRUGATED METAL PIPE | | | | | | | | | | | ✳ SEE NOTE 8 |
|---|---|---|---|---|---|---|---|---|---|---|---|
| Dia. | W | $t_w$ | $t_f$ | H | A1 ✳ | A2 ✳ | B | C | D1 ✳ | D2 ✳ | E |
| 1'-6" | 8'-0" | 1'-0" | 1'-0" | 4'-6" | 4'-0" | 4'-0" | 1'-6" | 2'-0" | 2'-0" | 2'-0" | 4'-0" |
| 1'-9" | 9'-0" | 1'-0" | 1'-0" | 4'-9" | 4'-6" | 4'-0" | 1'-6" | 2'-0" | 2'-6" | 2'-0" | 4'-3" |
| 2'-0" | 9'-6" | 1'-0" | 1'-0" | 5'-0" | 4'-6" | 4'-0" | 1'-6" | 2'-0" | 2'-6" | 2'-0" | 4'-6" |
| 2'-6" | 11'-6" | 1'-0" | 1'-0" | 5'-6" | 5'-0" | 4'-0" | 1'-6" | 2'-0" | 3'-0" | 2'-0" | 5'-0" |
| 3'-0" | 13'-0" | 1'-0" | 1'-0" | 6'-0" | 5'-6" | 4'-0" | 1'-6" | 2'-0" | 3'-6" | 2'-0" | 5'-6" |
| 3'-6" | 14'-6" | 1'-0" | 1'-0" | 6'-6" | 6'-0" | 4'-0" | 1'-6" | 2'-0" | 4'-0" | 2'-0" | 6'-0" |
| 4'-0" | 16'-0" | 1'-0" | 1'-0" | 7'-0" | 6'-6" | 4'-6" | 2'-0" | 2'-6" | 4'-0" | 2'-0" | 6'-6" |
| 4'-6" | 18'-0" | 1'-0" | 1'-0" | 7'-6" | 7'-0" | 4'-6" | 2'-0" | 2'-6" | 4'-6" | 2'-0" | 7'-0" |
| 5'-0" | 19'-6" | 1'-0" | 1'-0" | 8'-0" | 8'-0" | 5'-0" | 2'-6" | 3'-0" | 5'-0" | 2'-0" | 7'-6" |
| 5'-6" | 21'-0" | 1'-0" | 1'-0" | 8'-6" | 8'-6" | 5'-6" | 2'-6" | 3'-0" | 5'-6" | 2'-6" | 8'-0" |
| 6'-0" | 23'-0" | 1'-0" | 1'-0" | 9'-0" | 9'-6" | 6'-0" | 3'-0" | 3'-6" | 6'-0" | 2'-6" | 8'-6" |
| 6'-6" | 24'-6" | 1'-3" | 1'-3" | 9'-9" | 10'-0" | 6'-0" | 3'-0" | 3'-9" | 6'-6" | 2'-6" | 9'-3" |
| 7'-0" | 26'-0" | 1'-3" | 1'-3" | 10'-3" | 10'-0" | 6'-6" | 3'-0" | 3'-9" | 6'-6" | 3'-0" | 9'-9" |
| 7'-6" | 28'-0" | 1'-6" | 1'-6" | 11'-0" | 10'-6" | 6'-6" | 3'-0" | 4'-0" | 7'-0" | 3'-0" | 10'-6" |
| 8'-0" | 29'-6" | 1'-6" | 1'-6" | 11'-6" | 11'-0" | 7'-0" | 3'-0" | 4'-0" | 7'-6" | 3'-6" | 11'-0" |
| 8'-6" | 31'-0" | 2'-0" | 2'-0" | 12'-6" | 11'-6" | 7'-0" | 3'-0" | 4'-6" | 8'-0" | 3'-6" | 12'-0" |
| 9'-0" | 33'-0" | 2'-0" | 2'-0" | 13'-0" | 11'-6" | 7'-6" | 3'-0" | 4'-6" | 8'-0" | 4'-0" | 12'-6" |

| CORRUGATED METAL PIPE ARCH | | | | | | | | | | | ✳ SEE NOTE 8 | |
|---|---|---|---|---|---|---|---|---|---|---|---|---|
| SPAN | RISE | W | tw | tf | H | A1 ✳ | A2 ✳ | B | C | D1 ✳ | D2 ✳ | E |
| 1'-5" | 1'-1" | 6'-6" | 1'-0" | 1'-0" | 4'-1" | 4'-0" | 4'-0" | 1'-6" | 2'-0" | 2'-0" | 2'-0" | 3'-7" |
| 1'-9" | 1'-3" | 7'-0" | 1'-0" | 1'-0" | 4'-3" | 4'-0" | 4'-0" | 1'-6" | 2'-0" | 2'-0" | 2'-0" | 3'-9" |
| 2'-0" | 1'-6" | 8'-0" | 1'-0" | 1'-0" | 4'-6" | 4'-0" | 4'-0" | 1'-6" | 2'-0" | 2'-0" | 2'-0" | 4'-0" |
| 2'-4" | 1'-8" | 8'-6" | 1'-0" | 1'-0" | 4'-8" | 4'-0" | 4'-0" | 1'-6" | 2'-0" | 2'-0" | 2'-0" | 4'-2" |
| 2'-11" | 2'-0" | 9'-6" | 1'-0" | 1'-0" | 5'-0" | 4'-6" | 4'-0" | 1'-6" | 2'-0" | 2'-6" | 2'-0" | 4'-6" |
| 3'-6" | 2'-5" | 11'-0" | 1'-0" | 1'-0" | 5'-5" | 5'-0" | 4'-0" | 1'-6" | 2'-0" | 3'-0" | 2'-0" | 4'-11" |
| 4'-1" | 2'-9" | 12'-0" | 1'-0" | 1'-0" | 5'-9" | 5'-6" | 4'-0" | 1'-6" | 2'-0" | 3'-6" | 2'-0" | 5'-3" |
| 4'-9" | 3'-2" | 13'-6" | 1'-0" | 1'-0" | 6'-2" | 5'-6" | 4'-0" | 1'-6" | 2'-0" | 3'-6" | 2'-0" | 5'-8" |
| 5'-4" | 3'-7" | 15'-0" | 1'-0" | 1'-0" | 6'-7" | 6'-0" | 4'-0" | 1'-6" | 2'-0" | 4'-0" | 2'-0" | 6'-1" |
| 5'-11" | 3'-11" | 16'-0" | 1'-0" | 1'-0" | 6'-11" | 6'-6" | 4'-6" | 2'-0" | 2'-6" | 4'-0" | 2'-0" | 6'-5" |
| 6'-5" | 4'-4" | 17'-0" | 1'-0" | 1'-0" | 7'-4" | 7'-0" | 4'-6" | 2'-0" | 2'-6" | 4'-6" | 2'-0" | 6'-10" |
| 7'-1" | 4'-9" | 19'-0" | 1'-0" | 1'-0" | 7'-9" | 8'-0" | 4'-6" | 2'-0" | 2'-6" | 5'-6" | 2'-0" | 7'-3" |

## GENERAL NOTES:

1. For use on 2:1 or flatter backfill slopes only.
2. Use Class A concrete.
3. Use epoxy-coated ASTM A706, Grade 60 reinforcing steel fy=60,000 psi.
4. Place reinforcement 3" clear from surface of concrete unless otherwise noted.
5. Chamfer all exposed concrete corners 3/4".
6. If unsuitable foundation material is encountered, remove and backfill with Foundation Fill as directed by the Engineer.
7. Headwalls for skewed culverts to be parallel to road centerline. See plans for dimensions of openings in headwalls for skewed culverts.
8. For backfill soil with:
   $\phi$=30°, $\gamma$=130 pcf
   Use A1 and D1
   $\phi$=34°, $\gamma$=135 pcf
   Use A2 and D2
9. See plans for railing requirements at top of wall.

State of Alaska DOT&PF
ALASKA STANDARD PLAN

**HEADWALLS CAST-IN-PLACE TYPE II**

Adopted as an Alaska Standard Plan by: Kenneth J. Fisher, P.E.
Chief Engineer

Adoption Date: 02/08/2019

Last Code and Stds. Review
By: Date:

Next Code and Standards Review date: 02/08/2029

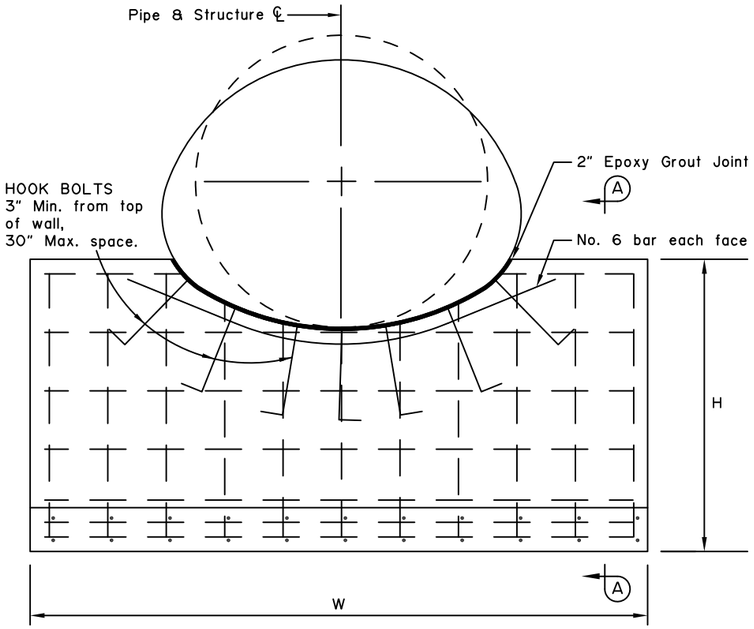


ELEVATION

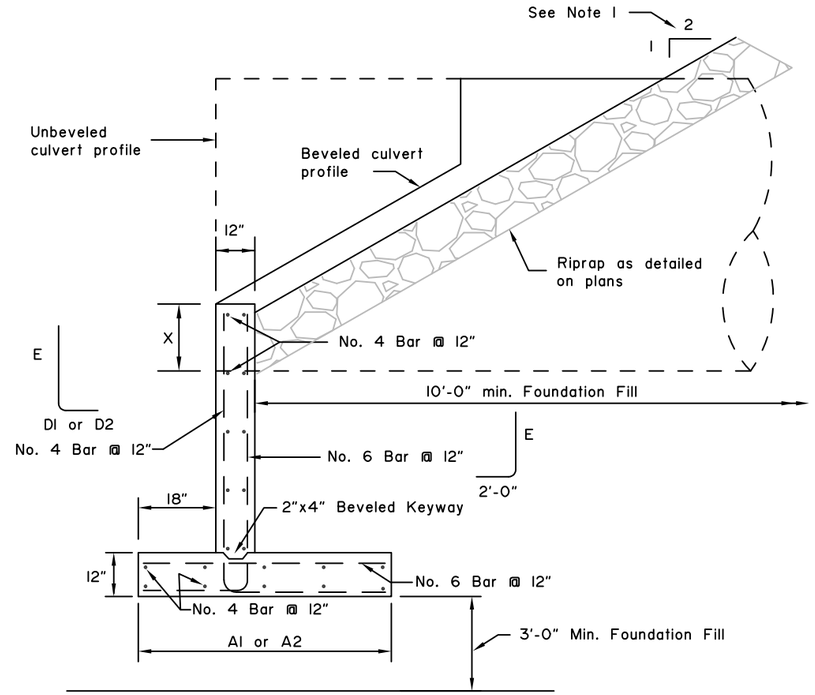


SECTION A-A

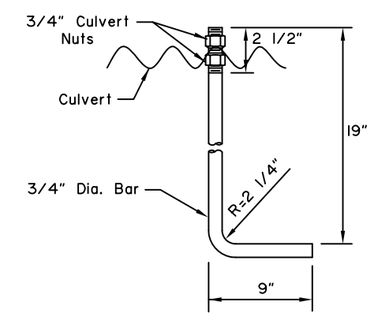


HOOK BOLT

| CORRUGATED METAL PIPE ✳ SEE NOTE 11 | | | | | | | |
|---|---|---|---|---|---|---|---|
| Dia. | W | H | A1 ✳ | A2 ✳ | D1 ✳ | D2 ✳ | E |
| 5'-0" | 9'-0" | 4'-0" | 4'-0" | 4'-0" | 2'-0" | 2'-0" | 3'-6" |
| 5'-6" | 10'-0" | 4'-6" | 4'-0" | 4'-0" | 2'-0" | 2'-0" | 4'-0" |
| 6'-0" | 11'-0" | 4'-6" | 4'-0" | 4'-0" | 2'-0" | 2'-0" | 4'-0" |
| 6'-6" | 12'-0" | 4'-6" | 4'-0" | 4'-0" | 2'-0" | 2'-0" | 4'-0" |
| 7'-0" | 12'-6" | 4'-6" | 4'-0" | 4'-0" | 2'-0" | 2'-0" | 4'-0" |
| 7'-6" | 13'-6" | 5'-0" | 4'-6" | 4'-0" | 2'-6" | 2'-0" | 4'-6" |
| 8'-0" | 14'-6" | 5'-0" | 4'-6" | 4'-0" | 2'-6" | 2'-0" | 4'-6" |
| 8'-6" | 15'-6" | 5'-0" | 4'-6" | 4'-0" | 2'-6" | 2'-0" | 4'-6" |
| 9'-0" | 16'-6" | 5'-6" | 5'-0" | 4'-0" | 3'-0" | 2'-0" | 5'-0" |
| 9'-6" | 17'-0" | 5'-6" | 5'-0" | 4'-0" | 3'-0" | 2'-0" | 5'-0" |
| 10'-0" | 18'-0" | 5'-6" | 5'-0" | 4'-0" | 3'-0" | 2'-0" | 5'-0" |
| 10'-6" | 19'-0" | 5'-6" | 5'-0" | 4'-0" | 3'-0" | 2'-0" | 5'-0" |
| 11'-0" | 20'-0" | 5'-6" | 5'-0" | 4'-0" | 3'-0" | 2'-0" | 5'-0" |

| CORRUGATED METAL PIPE ARCH ✳ SEE NOTE 11 | | | | | | | | |
|---|---|---|---|---|---|---|---|---|
| SPAN | RISE | W | H | A1 ✳ | A2 ✳ | D1 ✳ | D2 ✳ | E |
| 6'-1" | 4'-7" | 14'-0" | 5'-0" | 4'-6" | 4'-0" | 2'-6" | 2'-0" | 4'-6" |
| 6'-4" | 4'-9" | 14'-6" | 5'-0" | 4'-6" | 4'-0" | 2'-6" | 2'-0" | 4'-6" |
| 6'-9" | 4'-11" | 15'-0" | 5'-0" | 4'-6" | 4'-0" | 2'-6" | 2'-0" | 4'-6" |
| 7'-0" | 5'-1" | 15'-6" | 5'-0" | 4'-6" | 4'-0" | 2'-6" | 2'-0" | 4'-6" |
| 7'-3" | 5'-3" | 16'-0" | 5'-0" | 4'-6" | 4'-0" | 2'-6" | 2'-0" | 4'-6" |
| 7'-8" | 5'-5" | 16'-6" | 5'-0" | 4'-6" | 4'-0" | 2'-6" | 2'-0" | 4'-6" |
| 7'-11" | 5'-7" | 17'-0" | 5'-0" | 4'-6" | 4'-0" | 2'-6" | 2'-0" | 4'-6" |
| 8'-2" | 5'-9" | 17'-6" | 5'-0" | 4'-6" | 4'-0" | 2'-6" | 2'-0" | 4'-6" |
| 8'-7" | 5'-11" | 18'-0" | 5'-0" | 4'-6" | 4'-0" | 2'-6" | 2'-0" | 4'-6" |
| 8'-10" | 6'-1" | 18'-6" | 5'-0" | 4'-6" | 4'-0" | 2'-6" | 2'-0" | 4'-6" |
| 9'-4" | 6'-3" | 19'-0" | 5'-0" | 4'-6" | 4'-0" | 2'-6" | 2'-0" | 4'-6" |
| 9'-6" | 6'-5" | 19'-6" | 5'-0" | 4'-6" | 4'-0" | 2'-6" | 2'-0" | 4'-6" |
| 9'-9" | 6'-7" | 20'-0" | 5'-0" | 4'-6" | 4'-0" | 2'-6" | 2'-0" | 4'-6" |
| 10'-3" | 6'-9" | 20'-6" | 5'-0" | 4'-6" | 4'-0" | 2'-6" | 2'-0" | 4'-6" |
| 10'-8" | 6'-11" | 21'-0" | 5'-6" | 5'-0" | 4'-0" | 3'-0" | 2'-0" | 5'-0" |
| 10'-11" | 7'-1" | 21'-6" | 5'-6" | 5'-0" | 4'-0" | 3'-0" | 2'-0" | 5'-0" |

## GENERAL NOTES:

1. For use on 2:1 or flatter backfill slopes only.
2. See plans for pipe beveling requirements. See Std. Dwg. D-07 for "X" dimension and culvert beveling geometry.
3. Use Class A concrete.
4. Use epoxy-coated ASTM A706, Grade 60 reinforcing steel fy=60,000 psi.
5. Place reinforcement 3" clear from surface of concrete unless otherwise noted.
6. Chamfer all exposed concrete corners 3/4".
7. If unsuitable foundation material is encountered, remove and backfill with Foundation Fill as directed by the Engineer.
8. Furnishing and installing hook bolts in place is incidental to Class A concrete.
9. Use galvanized ASTM A307 hook bolts and nuts. Torque culvert nuts to 140 ft-lbs.
10. Headwalls for skewed culverts to be parallel to road centerline. See plans for dimensions of openings in headwalls for skewed culverts.
11. For backfill soil with:
    $\phi$=30°, $\gamma$=130 pcf
    Use A1 and D1
    $\phi$=34°, $\gamma$=135 pcf
    Use A2 and D2

State of Alaska DOT&PF
ALASKA STANDARD PLAN

**HEADWALLS PRECAST TYPE I**

Adopted as an Alaska Standard Plan by: Kenneth J. Fisher, P.E.
Chief Engineer

Adoption Date: 02/08/2019

Last Code and Stds. Review
By: Date:

Next Code and Standards Review date: 02/08/2029

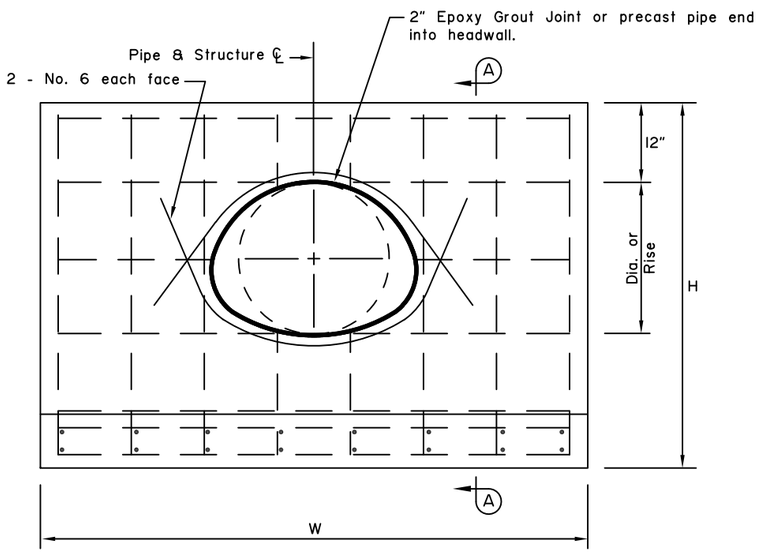


ELEVATION

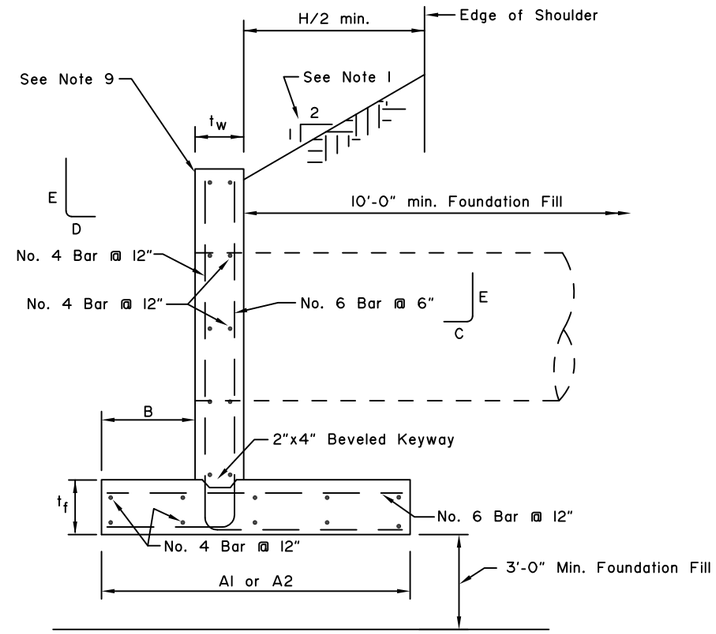


SECTION A-A

| CORRUGATED METAL PIPE | | | | | | | | | | | ✳ SEE NOTE 8 |
|---|---|---|---|---|---|---|---|---|---|---|---|
| Dia. | W | $t_w$ | $t_f$ | H | A1✳ | A2✳ | B | C | D1✳ | D2✳ | E |
| 1'-6" | 8'-0" | 1'-0" | 1'-0" | 4'-6" | 6'-0" | 4'-0" | 1'-6" | 2'-0" | 4'-0" | 2'-0" | 4'-0" |
| 1'-9" | 9'-0" | 1'-0" | 1'-0" | 4'-9" | 6'-6" | 4'-0" | 1'-6" | 2'-0" | 4'-6" | 2'-0" | 4'-3" |
| 2'-0" | 9'-6" | 1'-0" | 1'-0" | 5'-0" | 7'-0" | 4'-0" | 1'-6" | 2'-0" | 5'-0" | 2'-0" | 4'-6" |
| 2'-6" | 11'-6" | 1'-0" | 1'-0" | 5'-6" | 7'-6" | 4'-0" | 1'-6" | 2'-0" | 5'-6" | 2'-0" | 5'-0" |
| 3'-0" | 13'-0" | 1'-0" | 1'-0" | 6'-0" | 8'-6" | 4'-6" | 1'-6" | 2'-0" | 6'-6" | 2'-6" | 5'-6" |
| 3'-6" | 14'-6" | 1'-0" | 1'-0" | 6'-6" | 9'-0" | 5'-0" | 1'-6" | 2'-0" | 7'-0" | 3'-0" | 6'-0" |
| 4'-0" | 16'-0" | 1'-0" | 1'-0" | 7'-0" | 10'-0" | 5'-6" | 2'-0" | 2'-6" | 7'-6" | 3'-0" | 6'-6" |
| 4'-6" | 18'-0" | 1'-3" | 1'-3" | 7'-9" | 11'-0" | 6'-0" | 2'-0" | 2'-9" | 8'-6" | 3'-6" | 7'-3" |
| 5'-0" | 19'-6" | 1'-6" | 1'-6" | 8'-6" | 12'-0" | 6'-6" | 2'-6" | 3'-6" | 9'-0" | 3'-6" | 8'-0" |

| CORRUGATED METAL PIPE ARCH | | | | | | | | | | | ✳ SEE NOTE 8 |
|---|---|---|---|---|---|---|---|---|---|---|---|
| SPAN | RISE | W | $t_w$ | $t_f$ | H | A1✳ | A2✳ | B | C | D1✳ | D2✳ | E |
| 1'-5" | 1'-1" | 6'-6" | 1'-0" | 1'-0" | 4'-1" | 5'-6" | 4'-0" | 1'-6" | 2'-0" | 3'-6" | 2'-0" | 3'-7" |
| 1'-9" | 1'-3" | 7'-0" | 1'-0" | 1'-0" | 4'-3" | 5'-6" | 4'-0" | 1'-6" | 2'-0" | 3'-6" | 2'-0" | 3'-9" |
| 2'-0" | 1'-6" | 8'-0" | 1'-0" | 1'-0" | 4'-6" | 6'-0" | 4'-0" | 1'-6" | 2'-0" | 4'-0" | 2'-0" | 4'-0" |
| 2'-4" | 1'-8" | 8'-6" | 1'-0" | 1'-0" | 4'-8" | 6'-0" | 4'-0" | 1'-6" | 2'-0" | 4'-0" | 2'-0" | 4'-2" |
| 2'-11" | 2'-0" | 9'-6" | 1'-0" | 1'-0" | 5'-0" | 7'-0" | 4'-0" | 1'-6" | 2'-0" | 5'-0" | 2'-0" | 4'-6" |
| 3'-6" | 2'-5" | 11'-0" | 1'-0" | 1'-0" | 5'-5" | 7'-6" | 4'-0" | 1'-6" | 2'-0" | 5'-6" | 2'-0" | 4'-11" |
| 4'-1" | 2'-9" | 12'-0" | 1'-0" | 1'-0" | 5'-9" | 8'-0" | 4'-0" | 1'-6" | 2'-0" | 6'-0" | 2'-6" | 5'-3" |
| 4'-9" | 3'-2" | 13'-6" | 1'-0" | 1'-0" | 6'-2" | 8'-6" | 4'-0" | 1'-6" | 2'-0" | 6'-6" | 2'-6" | 5'-8" |
| 5'-4" | 3'-7" | 15'-0" | 1'-0" | 1'-0" | 6'-7" | 9'-0" | 5'-0" | 1'-6" | 2'-0" | 7'-0" | 3'-0" | 6'-1" |
| 5'-11" | 3'-11" | 16'-0" | 1'-0" | 1'-0" | 6'-11" | 10'-0" | 5'-6" | 2'-0" | 2'-6" | 7'-6" | 3'-0" | 6'-5" |
| 6'-5" | 4'-4" | 17'-0" | 1'-3" | 1'-3" | 7'-7" | 10'-6" | 5'-6" | 2'-0" | 2'-9" | 8'-0" | 3'-0" | 7'-1" |
| 7'-1" | 4'-9" | 19'-0" | 1'-6" | 1'-6" | 8'-3" | 11'-6" | 6'-6" | 2'-6" | 3'-6" | 8'-6" | 3'-6" | 7'-9" |

## GENERAL NOTES:

1. For use on 2:1 or flatter backfill slopes only.
2. Use Class A concrete.
3. Use epoxy-coated ASTM A706, Grade 60 reinforcing steel fy=60,000 psi.
4. Place reinforcement 3" clear from surface of concrete unless otherwise noted.
5. Chamfer all exposed concrete corners 3/4".
6. If unsuitable foundation material is encountered, remove and backfill with Foundation Fill as directed by the Engineer.
7. Headwalls for skewed culverts to be parallel to road centerline. See plans for dimensions of openings in headwalls for skewed culverts.
8. For backfill soil with:
   $\phi$=30°, $\gamma$=130 pcf
   Use A1 and D1
   $\phi$=34°, $\gamma$=135 pcf
   Use A2 and D2
9. See plans for railing requirements.

State of Alaska DOT&PF
ALASKA STANDARD PLAN

**HEADWALLS PRECAST TYPE II**

Adopted as an Alaska Standard Plan by: Kenneth J. Fisher, P.E.
Chief Engineer

Adoption Date: 02/08/2019

Last Code and Stds. Review
By: Date:

Next Code and Standards Review date: 02/08/2029

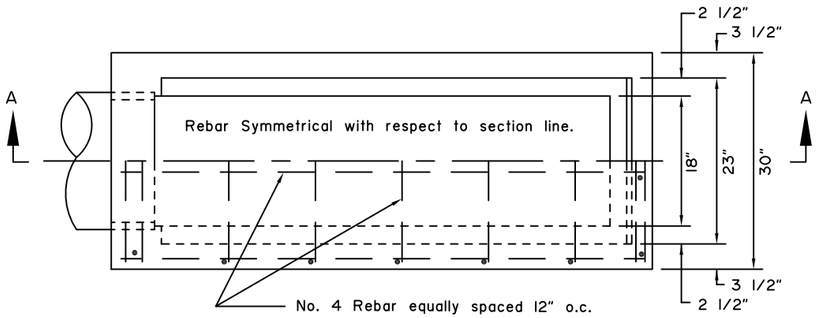


PLAN
(Frame not shown for clarity)

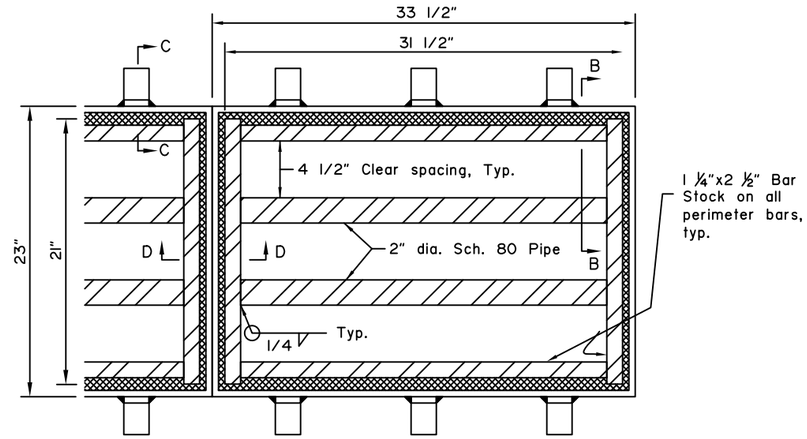


STEEL FRAME AND GRATE CONFIGURATION

## GENERAL NOTES:

1. Provide either steel frames and grates or cast iron frames and grates.
2. Chamfer all exposed concrete corners ¾".
3. Provide 2" minimum cover for all reinforcing steel.
4. Use Grade 40 minimum reinforcing steel.
5. Cast iron frame embedment lugs may differ from the configuration shown for the steel frame. Provide 6 total embedment lugs extending into concrete a minimum of 3".
6. Shop fabricate steel frames and steel grates.
7. Hot dip galvanize steel frames and grates. Provide uncoated cast iron frames and grates.

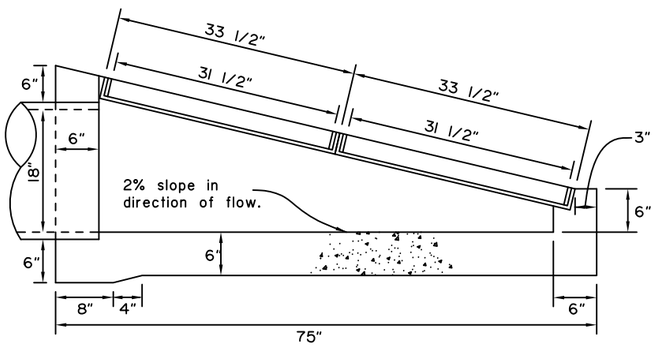


SECTION A-A

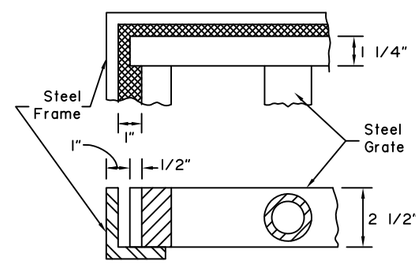


SECTION B-B

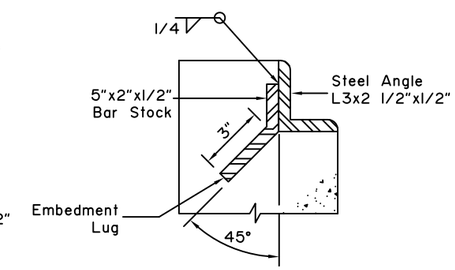


SECTION C-C

STEEL FRAME & GRATE DETAILS
Finished grate size is 21"x31 1/2"

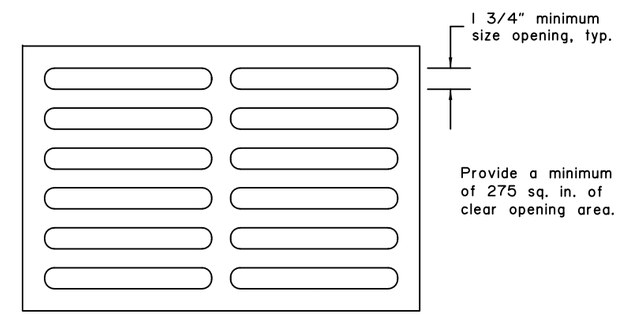


CAST IRON GRATE CONFIGURATION
Finished grate size is 21"x 31 1/2"

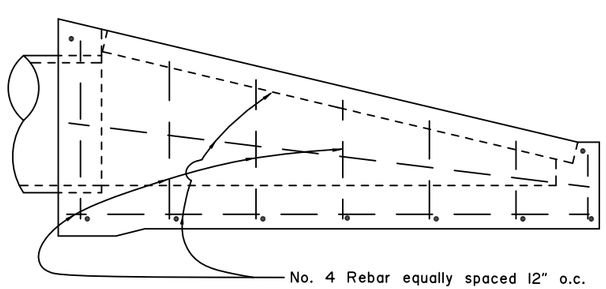


TYPICAL REINFORCEMENT STEEL DETAIL

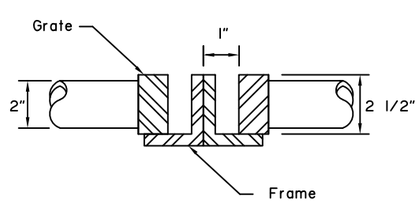


SECTION D-D

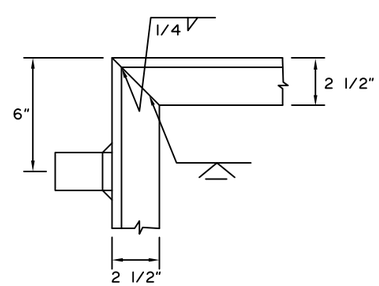


STEEL FRAME DETAIL

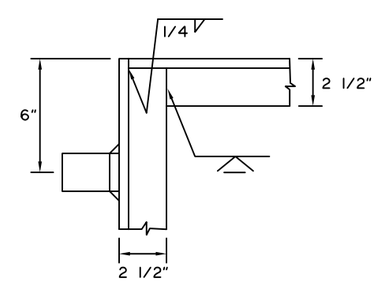


ALTERNATE STEEL FRAME DETAIL

NOTE: DRAWING NOT TO SCALE

State of Alaska DOT&PF
ALASKA STANDARD PLAN

**TYPE "C" INLET BOX**
**18 INCH PIPE**
**ON 4:1 SLOPE**

Adopted as an Alaska Standard Plan by: Kenneth J. Fisher, P.E.
Chief Engineer

Adoption Date: 02/08/2019

Last Code and Stds. Review
By: Date:

Next Code and Standards Review date: 02/08/2029

D-42.12

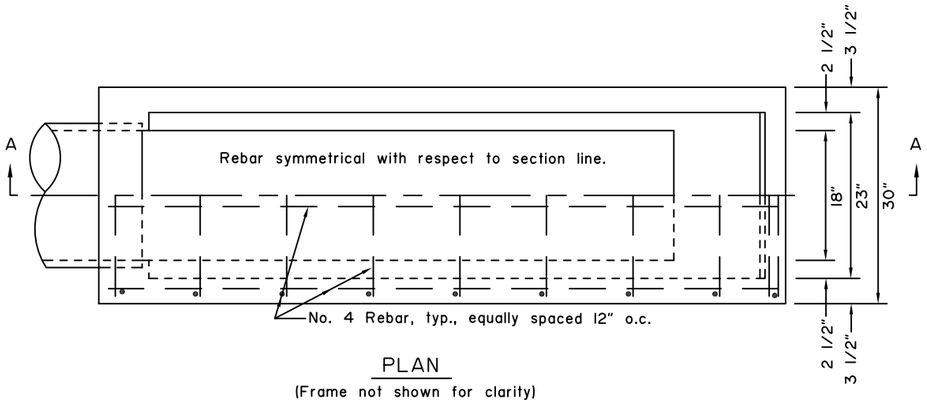


PLAN
(Frame not shown for clarity)

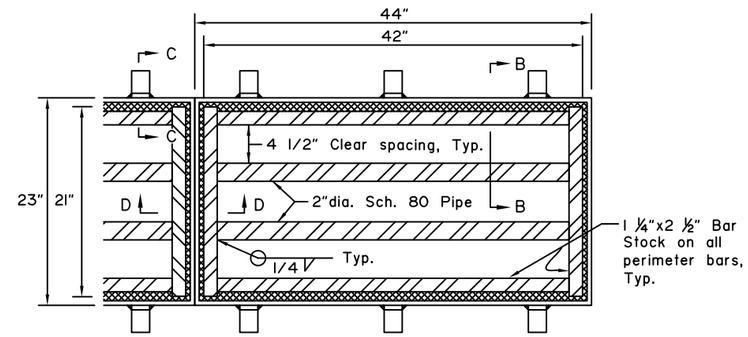


STEEL FRAME & GRATE CONFIGURATION

## GENERAL NOTES:

1. Provide either steel frames and grates or cast iron frames and grates.
2. Chamfer all exposed concrete corners 3/4".
3. Provide 2" minimum cover for all reinforcing steel.
4. Use Grade 40 minimum reinforcing steel.
5. Cast iron frame embedment lugs may differ from the configuration shown for steel frames. Provide 6 total embedment lugs extending into concrete a minimum of 3".
6. Shop fabricate steel frames and steel grates.
7. Hot dip galvanize steel frames and grates. Provide uncoated cast iron frames and grates.

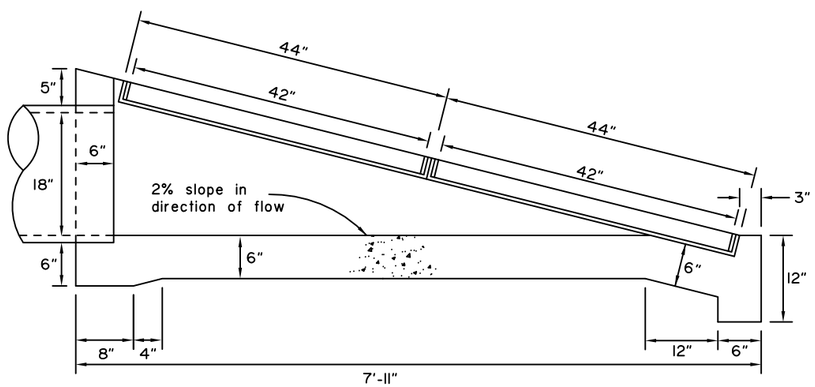


SECTION A-A

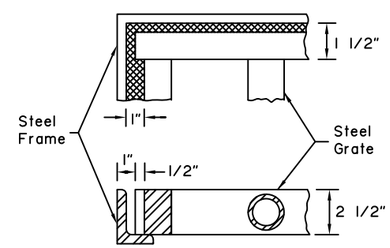


SECTION B-B

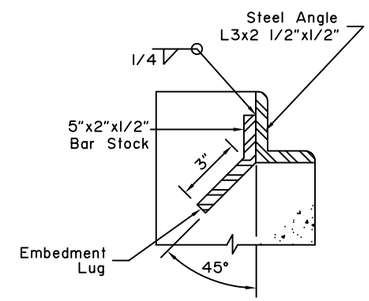


SECTION C-C

STEEL FRAME & GRATE DETAILS
Finished grate size is 21"x42"

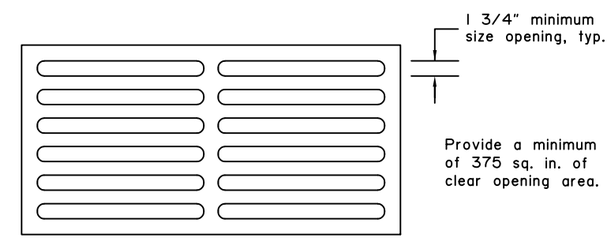


CAST IRON GRATE CONFIGURATION
Finished grate size is 21"x42"

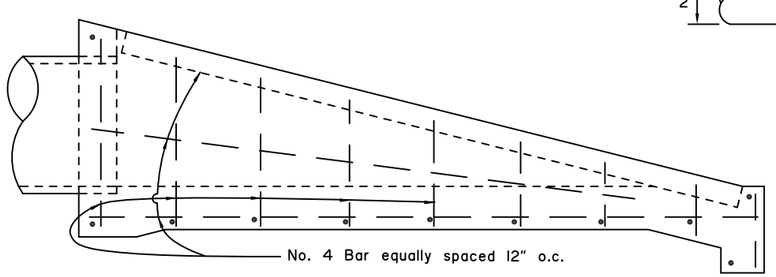


TYPICAL REINFORCEMENT STEEL DETAIL

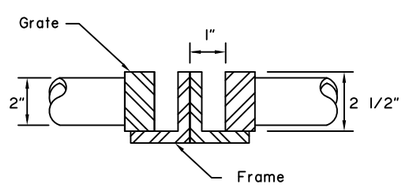


SECTION D-D

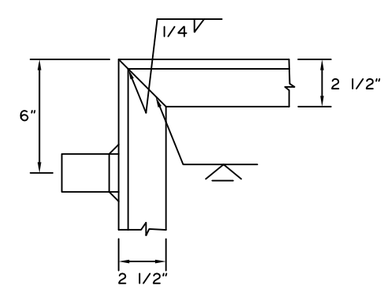


STEEL FRAME DETAIL

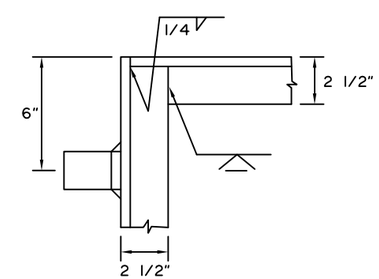


ALTERNATE STEEL FRAME DETAIL

NOTE: DRAWING NOT TO SCALE

State of Alaska DOT&PF
ALASKA STANDARD PLAN

**TYPE "D" OUTLET BOX**
**18 INCH PIPE**
**ON 4:1 SLOPE**

Adopted as an Alaska Standard Plan by: Kenneth J. Fisher, P.E.
Chief Engineer

Adoption Date: 02/08/2019

Last Code and Stds. Review
By: Date:

Next Code and Standards Review date: 02/08/2029

D-43.12

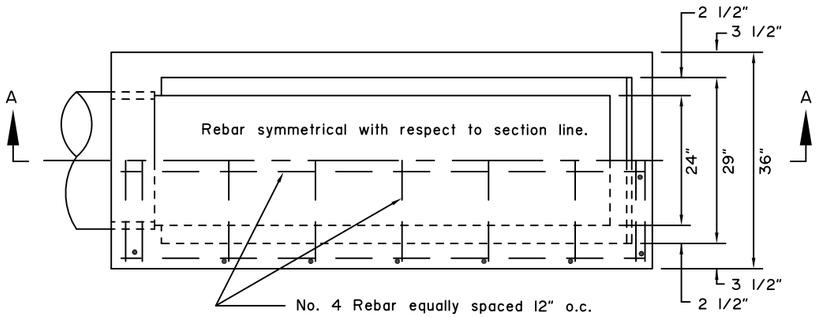


PLAN

(Grate not shown for clarity)

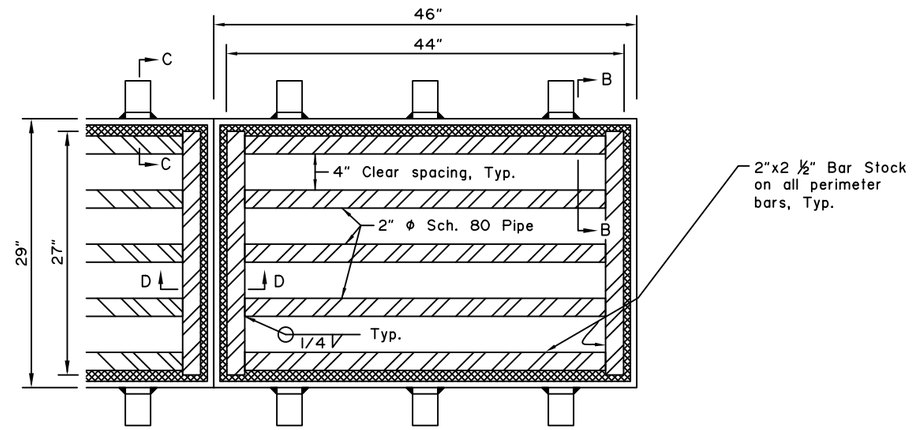


STEEL FRAME & GRATE CONFIGURATION

## GENERAL NOTES:

1. Provide either steel frames and grates or cast iron frames and grates.
2. Chamfer all exposed concrete corners ¾".
3. Provide 2" minimum cover for all reinforcing steel.
4. Use Grade 40 minimum reinforcing steel.
5. Cast iron frame embedment lugs may differ from the configuration shown for steel frames. Provide 6 total embedment lugs extending into concrete a minimum of 3".
6. Shop fabricate steel frames and steel grates.
7. Hot dip galvanize steel frames and grates. Provide uncoated cast iron frames and grates.

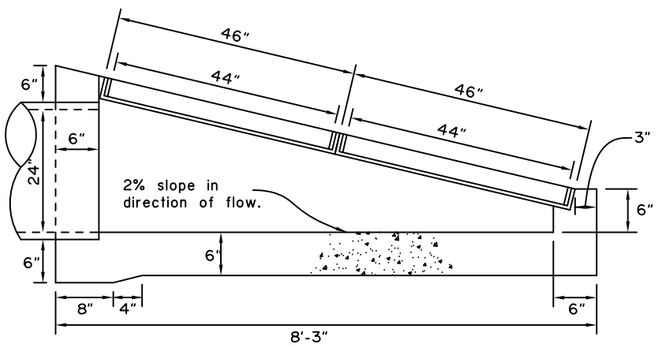


SECTION A-A

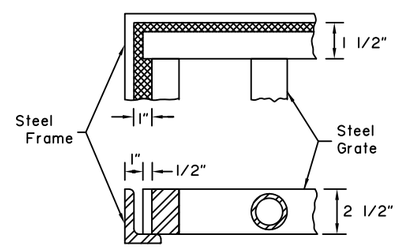


SECTION B-B

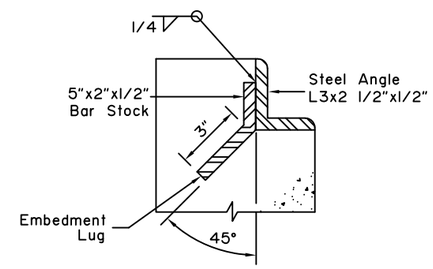


SECTION C-C

STEEL FRAME & GRATE DETAILS

Finished grate size is 27"x44"

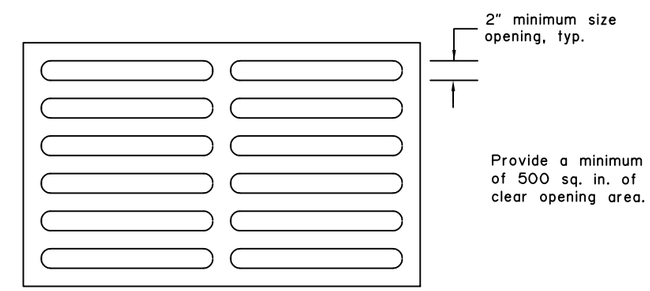


CAST IRON GRATE CONFIGURATION

Finished grate size is 27"x44"

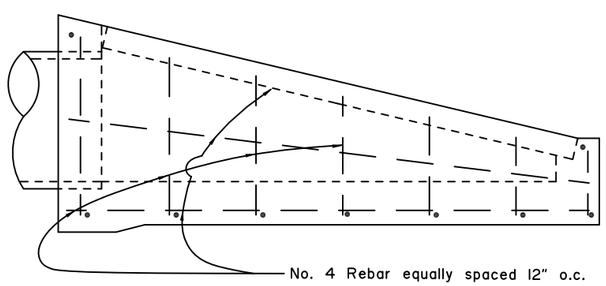


TYPICAL REINFORCEMENT STEEL DETAIL

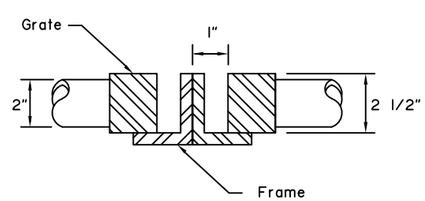


SECTION D-D

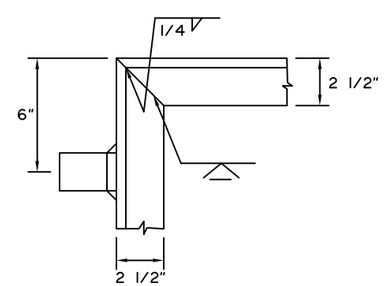


STEEL FRAME DETAIL

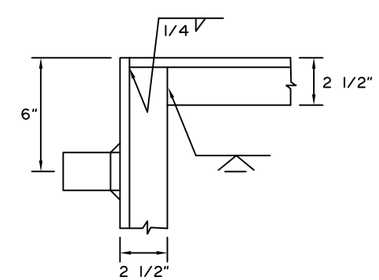


ALTERNATE STEEL FRAME DETAIL

NOTE: DRAWING NOT TO SCALE

State of Alaska DOT&PF
ALASKA STANDARD PLAN

**TYPE "C" INLET BOX 24 INCH PIPE ON 4:1 SLOPE**

Adopted as an Alaska Standard Plan by: Kenneth J. Fisher, P.E. Chief Engineer

Adoption Date: 02/08/2019

Last Code and Stds. Review
By: Date:

Next Code and Standards Review date: 02/08/2029

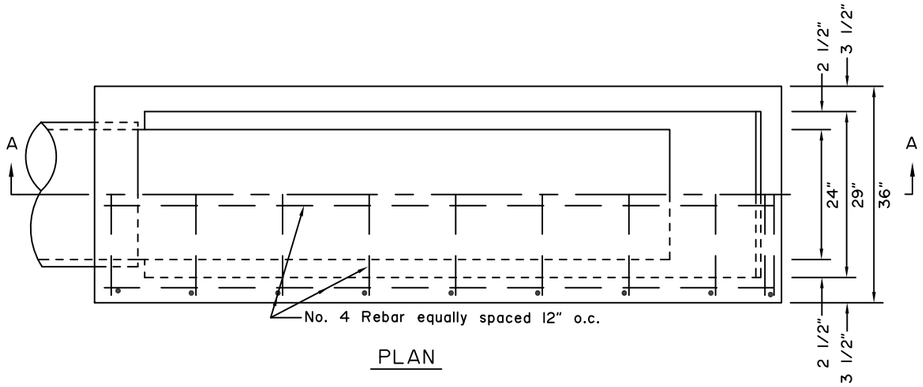


PLAN

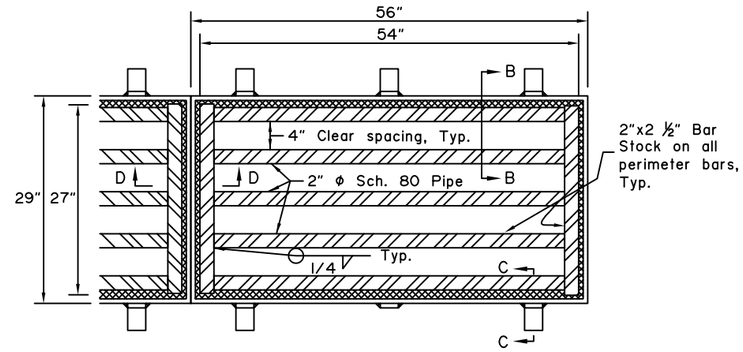


STEEL FRAME & GRATE CONFIGURATION

## GENERAL NOTES:

1. Provide either steel frames and grates or cast iron frames and grates.
2. Chamfer all exposed concrete corners ¾".
3. Provide 2" minimum cover for all reinforcing steel.
4. Use Grade 40 minimum reinforcing steel.
5. Cast iron frame embedment lugs may differ from the configuration shown for steel frames. Provide 6 total embedment lugs extending into concrete a minimum of 3".
6. Shop fabricate steel frames and steel grates.
7. Hot dip galvanize steel frames and grates. Provide uncoated cast iron frames and grates.

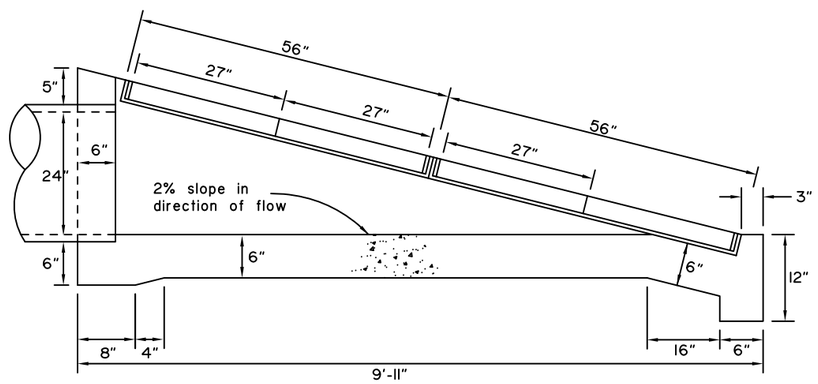


SECTION A-A

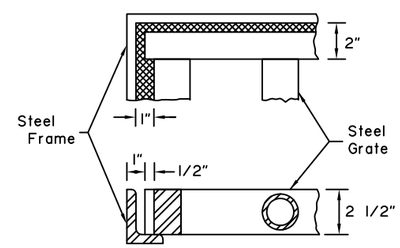


SECTION B-B

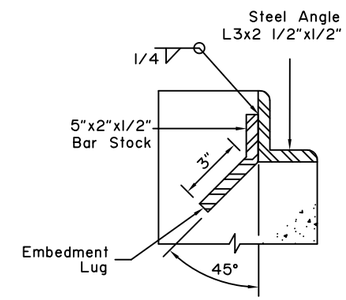


SECTION C-C

STEEL FRAME & GRATE DETAILS

Finished grate size is 27"x54"

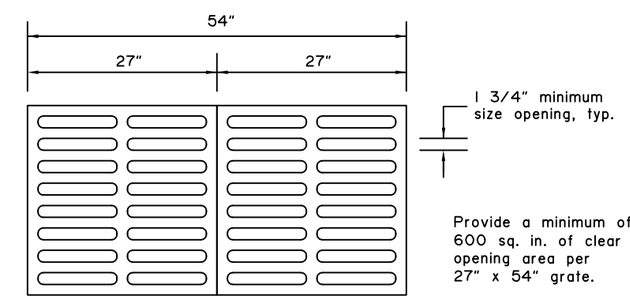


CAST IRON GRATE CONFIGURATION

Finished grate size is 27"x54"
Shown with 2 ea. 27"x27" grates end-to-end

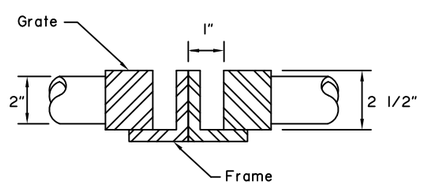


SECTION D-D

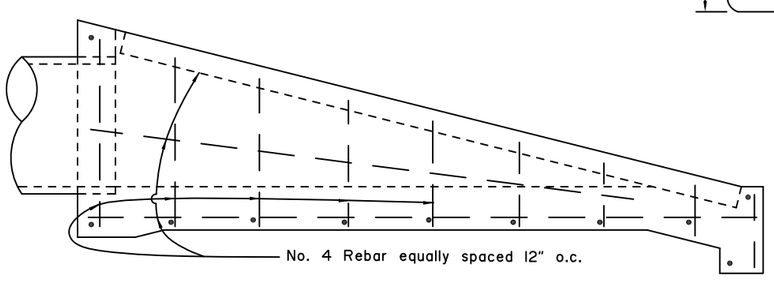


TYPICAL REINFORCEMENT STEEL DETAIL

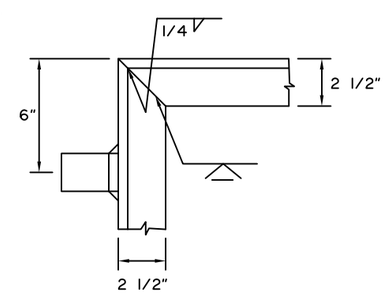


STEEL FRAME DETAIL

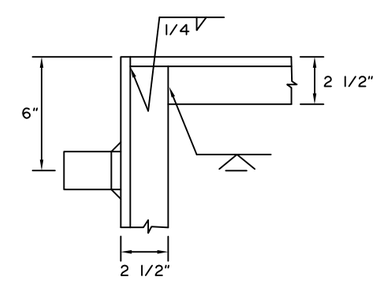


ALTERNATE STEEL FRAME DETAIL

NOT TO SCALE

State of Alaska DOT&PF
ALASKA STANDARD PLAN

**TYPE "D" OUTLET BOX 24 INCH PIPE ON 4:1 SLOPE**

Adopted as an Alaska Standard Plan by: Kenneth J. Fisher, P.E. Chief Engineer

Adoption Date: 02/08/2019

Last Code and Stds. Review
By: Date:

Next Code and Standards Review date: 02/08/2029

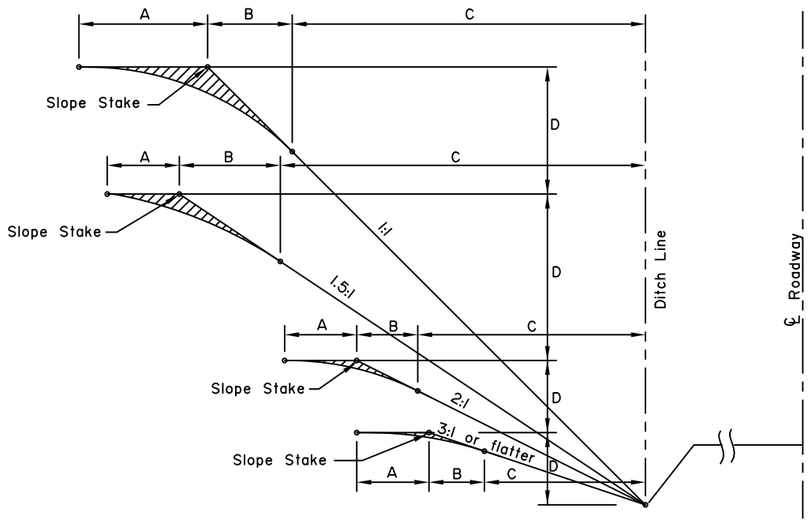


FIG. 1
TYPYICAL SECTION OF ROUNDED SLOPES

TABLE OF ROUNDING DIMENSIONS

| Rate of Slope | A | | B | |
|---|---|---|---|---|
| | When B's 5.0' or less | When B is more than 5.0' | When D's 15.0' or less | When D is more than 15.0' |
| 3:1 or flatter | B | 5.0' | 5.0' | 5.0' |
| 2:1 | B | 5.0' | 5.0' | D/3 |
| 1.5:1 | B | 5.0' | 5.0' | D/3 |
| 1:1 | B | $\frac{D}{3}$,Max. 10.0' | | D/3 |

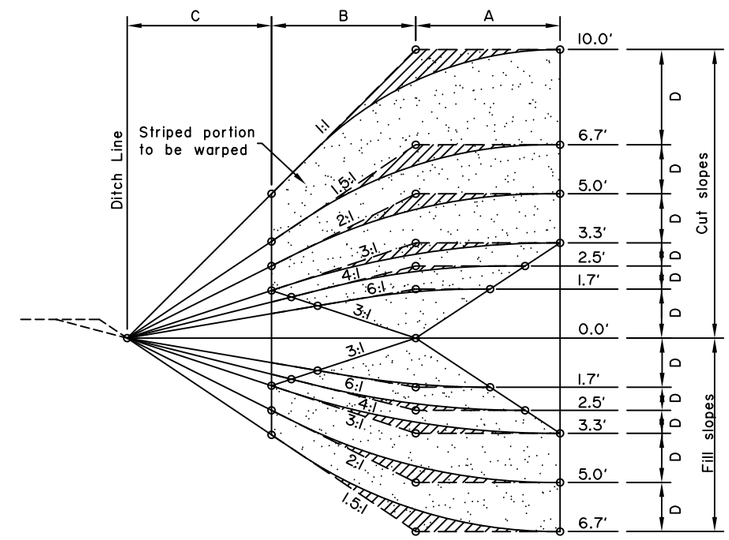


FIG. 4
TYPICAL GRADING FOR WARPING SLOPES

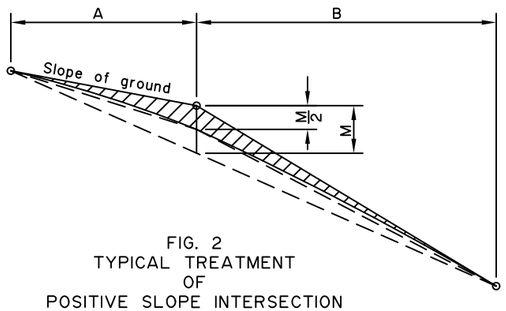


FIG. 2
TYPICAL TREATMENT
OF
POSITIVE SLOPE INTERSECTION

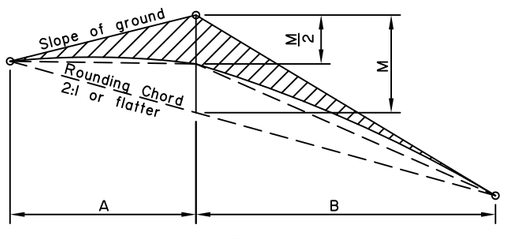


FIG. 3
TYPICAL TREATMENT
OF
NEGATIVE SLOPE INTERSECTION

TYPICAL SLOPE ROUNDING

GENERAL NOTES

1. Cut and fill slopes shall be rounded as shown in fig. 1, 2, and 3 when required by the plans or special provisions. Rounding of fill slopes shall be done in the same manner as shown for cut slopes.

2. Intersections of cut and fill slopes shall be warped as shown in fig. 4 and 5 when required by the plans or special provisions.

3. Warping of cut and fill slopes is for the purpose of attaining a more pleasing appearance and to promote the growth of natural vegetation by causing the fill slope to flow smoothly into the cut slope. The length of slope warping is relatively proportional to the character of the topography, the distance between end limits of warped surfaces being lessended as the terrain steepens and lengthened as the topography flattens out. The procedure as outlined herein is typical and shall be varied to meet special conditions and shall be as staked by the Engineer.

4. SUGGESTED PROCEDURE FOR WARPING SLOPING

A--Select end points for warping to fit specified slope ratios as follows:-

(a) The dimensions A, B, and C shall all be constant throughout the full length of warping, E.

(b) When the average depth of cut or fill is such that the dimension B+C exceeds 10 feet, the ends of warping shall be at points where B+C is 10 feet, provided the warping distance E does not exceed 100 feet. That is, as shown in fig. 4 and 5, warping shall begin at a cut or fill depth of 6.7 feet for 1.5:1 slopes, at 50 feet for 2:1 slopes, etc. if the dimension E exceeds 100 feet, the dimension B+C shall be reduced until the intersections of the prescribed slopes with the natural ground are 100 feet apart.

(c) When the average depth of cut or fill is such that the distance B+C is between 5 feet and 10 feet, the ends of warping shall be at points where C is 0 feet, but such points shall not be more than 150 feet apart.

(d) When the average depth of cut or fill is such that the dimension B is less than 5 feet, the ends of warping shall be 200 feet apart.

B--Set slope stakes at end of warping.

C--Set additional slope stakes at various intervals between end stakes and at the sames distance from centerline.

D--Flatten and round warped slopes as shown in figure 4 for each section.

5. A layer of earth overlying a rock cut shall be rounded as far as possible as though the total height of slope were in earth cut.

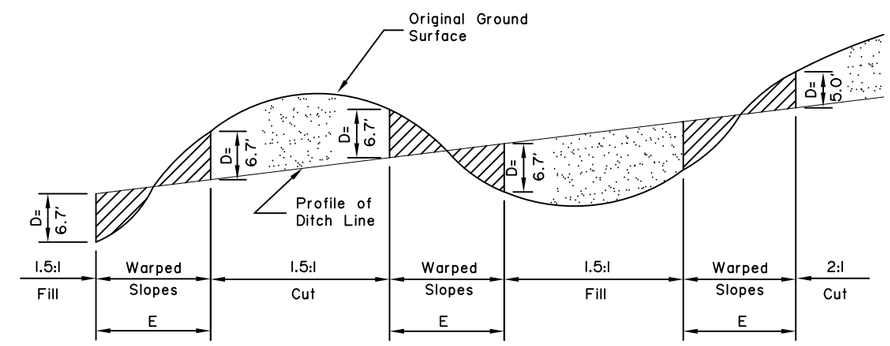


FIG. 5
TYPICAL PROFILE OF WARPED SLOPES

TYPICAL SLOPE WARPING

State of Alaska DOT&PF
ALASKA STANDARD PLAN

SLOPE
ROUNDING AND WARPING

Adopted as an Alaska Standard Plan by: Kenneth J. Fisher, P.E.
Chief Engineer

Adoption Date: 02/08/2019

Last Code and Stds. Review
By: Date:

Next Code and Standards Review date: 02/08/2029

# F-01.04

SHEET 1 of 1

NOTE: Pull post shall be spaced at 250' maximum intervals.

Fabric shall be placed on highway side of post.

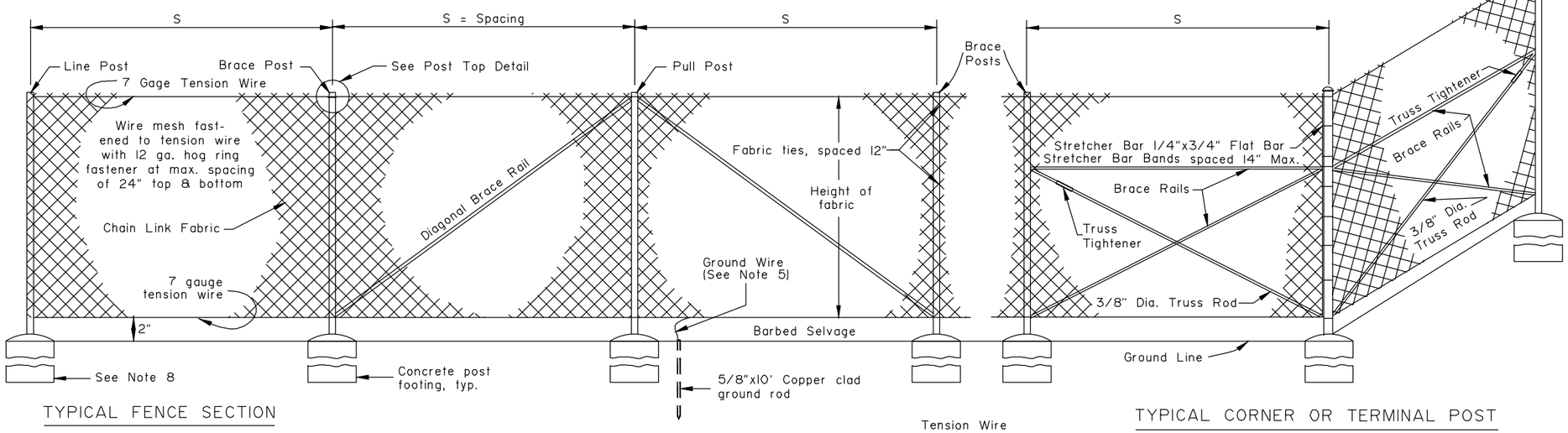


TYPICAL FENCE SECTION

TYPICAL PULL POST

TYPICAL CORNER OR TERMINAL POST

## GENERAL NOTES:

1. Use equal pole spacing (S). Maximum pole spacing is 10 feet unless directed otherwise by the Engineer.
2. Securely fasten post tops to post.
3. Securely fasten brace rails and truss rods to post with brace bands.
4. Provide truss rods with a tensioning adjusting mechanism.
5. Attach ground wire to fence fabric with a split bolt.
6. Stretch fabric to a smooth uniform appearance.
7. Details shown indicate general design and dimensions may vary among manufacturers.
8. Set line, pull, corner, and terminal posts in concrete footings unless in muskeg or shown otherwise in the plans.

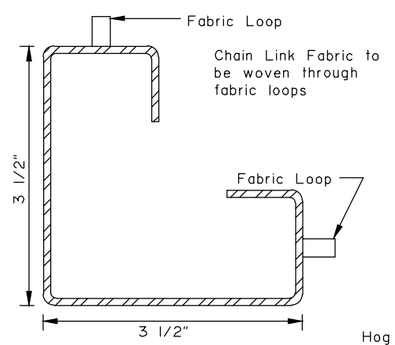


ROLL FORMED POST

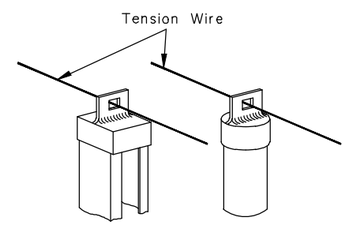


LINE POST TOPS

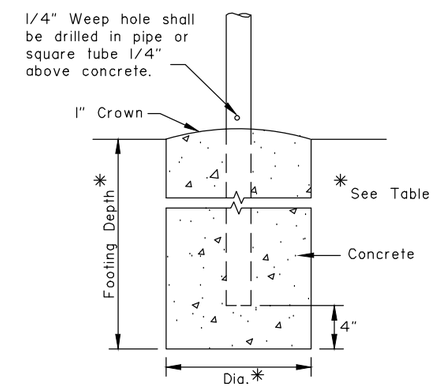


CONCRETE POST FOOTING

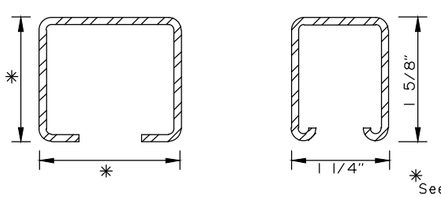


C POST

ROLL FORMED BRACE

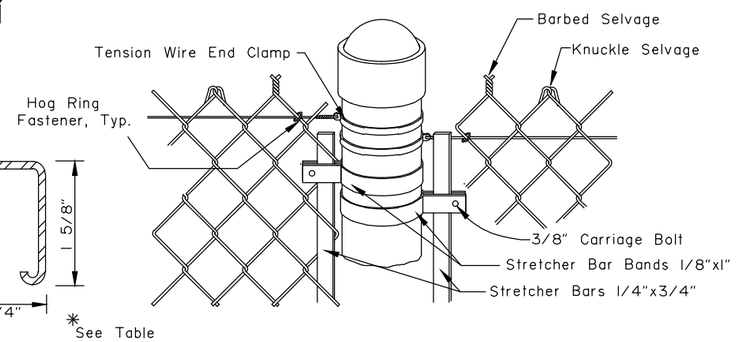


PIPE STYLE POST TOP

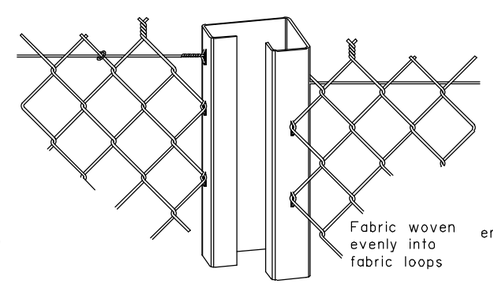


ROLL FORMED POST TOP

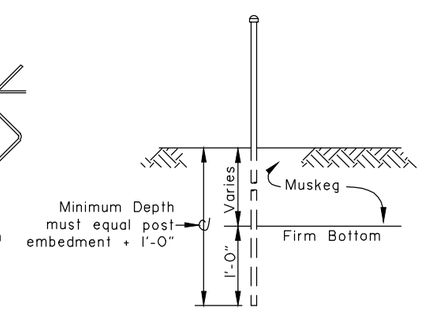


POST SETTING IN MUSKEG AREAS

| FABRIC HEIGHT | POST | | | | | | | | | | | | | | TOP OR BRACE RAIL | | | | | | ALTERNATE POST | |
|---|---|---|---|---|---|---|---|---|---|---|---|---|---|---|---|---|---|---|---|---|---|---|
| | END-CORNER-PULL | | | | | | | | LINE-BRACE | | | | | | | | | | | | LINE-BRACE | |
| | PIPE | | SQUARE TUBE | | ROLL FORMED | | FOOTING | | PIPE | | C POST | | FOOTING | | PIPE | | ROLL FORMED | | H POST | | H POST | |
| | SIZE | WT/FT. | SIZE | WT/FT. | SIZE | WT/FT. | DEPTH | DIA. | SIZE | WT/FT. | SIZE | WT/FT. | DEPTH | DIA. | SIZE | WT/FT. | SIZE | WT/FT. | SIZE | WT/FT. | SIZE | WT/FT. |
| 3' | 2" | 3.65 # | 2" x 2" | 4.31 # | 3 1/2"x3 1/2" | 4.84 # | 40" | 10" | 1 1/2" | 2.72 # | 1 7/8"x1 5/8" | 2.28 # | 28" | 10" | 1 1/4" | 2.27 # | 1 5/8" | 1.35 # | 1 1/2"x 1 5/16" | 2.27 # | 1 7/8"x1 5/8" | 2.72 # |
| 4' | " | " | " | " | " | " | " | " | " | " | " | " | " | " | " | " | " | " | " | " | " | " |
| 5' | 2" | 3.65 # | 2" x 2" | 4.31 # | 3 1/2"x3 1/2" | 4.84 # | 40" | 10" | 1 1/2" | 2.72 # | 1 7/8"x1 5/8" | 2.28 # | 28" | 10" | " | " | " | " | " | " | 1 7/8"x1 5/8" | 2.72 # |
| 6' | 2 1/2" | 5.79 # | 2 1/2"x2 1/2" | 5.59 # | 3 1/2"x3 1/2" | 4.84 # | 48" | 15" | 2" | 3.65 # | 2 1/4"x1 45/64" | 2.64 # | 40" | 12" | " | " | " | " | " | " | 2 1/4"x2" | 4.1 # |
| 7' | " | " | " | " | " | " | " | " | " | " | " | " | " | " | " | " | " | " | " | " | " | " |
| 8' | 2 1/2" | 5.79 # | 2 1/2"x2 1/2" | 5.59 # | 3 1/2"x3 1/2" | 4.84 # | 48" | 15" | 2" | 3.65 # | 2 1/4"x1 45/64" | 2.64 # | 40" | 12" | " | " | " | " | " | " | 2 1/4"x2" | 4.1 # |

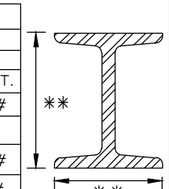


H POST

State of Alaska DOT&PF
ALASKA STANDARD PLAN

## CHAIN LINK FENCE

Adopted as an Alaska Standard Plan by: Carolyn Morehouse
Carolyn Morehouse, P.E.
Chief Engineer

Adoption Date: 7/17/2020

Last Code and Stds. Review
By: KLH Date: 7/8/2020

Next Code and Standards Review date: 7/8/2030

F-01.04

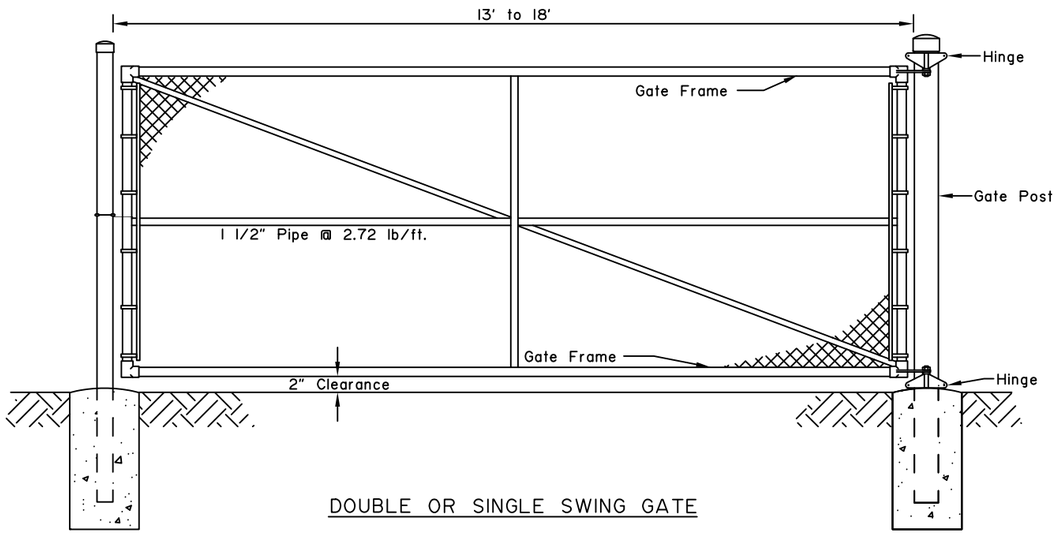


DOUBLE OR SINGLE SWING GATE

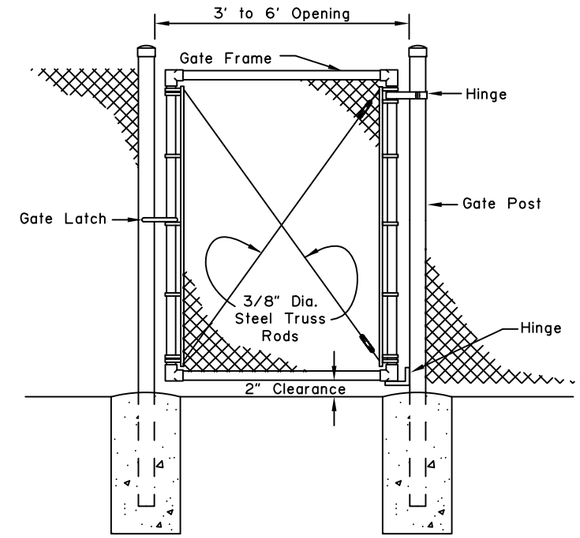


PEDESTRIAN GATE

## GENERAL NOTES:

1. Details shown are to indicate general design only. Dimensions may vary slightly among the manufacturers.
2. Gate fabric shall be of the same design and height of line fence fabric.
3. Gate fabric shall be furnished with knuckle selvage top and bottom.
4. Concrete footings shall be of the same depth as end posts with a diameter 1 1/2 times larger except as shown for gate stop.
5. Gate frames may be fabricated by welding or riveting and shall be braced to eliminate sagging. Hinges, latches and other gate appurtenances shall be of sufficient strength and design to assure easy trouble free operation.

| Gate Fabric Height | Gate Opening | | GATE POST | | | | | | GATE FRAME | | | |
|---|---|---|---|---|---|---|---|---|---|---|---|---|
| | SINGLE GATE | DOUBLE GATE | ST'D PIPE | | SQUARE TUBE | | ROLL FORMED | | ST'D PIPE | | SQUARE TUBE | |
| | | | SIZE | WT/FT. | SIZE | WT/FT. | SIZE | WT/FT. | SIZE | WT/FT. | SIZE | WT/FT. |
| 3' to 5' | 3' to 6' | 6' to 12' | 2" | 3.65# | 2" x 2" | 4.31 # | 3 1/2"x3 1/2" | 5.14 # | 1 1/2" | 2.72 # | 2" x 2" | 4.31 # |
| " | 7' to 12' | 13' to 24' | 2 1/2" | 5.79 # | 2 1/2"x2 1/2" | 5.59 # | " " | " | " | " | " " | " |
| " | 13' to 18' | 25' to 36' | " | " | " " | " | " " | " | " | " | " " | " |
| 6' to 8' | 3' to 6' | 6' to 12' | 2 1/2" | 5.79 # | 2 1/2"x2 1/2" | 5.59 # | 3 1/2"x3 1/2" | 5.14 # | 1 1/2" | 2.72 # | " " | " |
| " | 7' to 12' | 13' to 24' | 3 1/2" | 9.11 # | 3 1/2"x3 1/2" | 8.14 # | ——— | ——— | 2" | 3.65# | " " | " |
| " | 13' to 18' | 25' to 36' | 6" | 18.97# | 6" x 6" | 18.82# | ——— | ——— | " | " | 2" x 2" | 4.31 # |

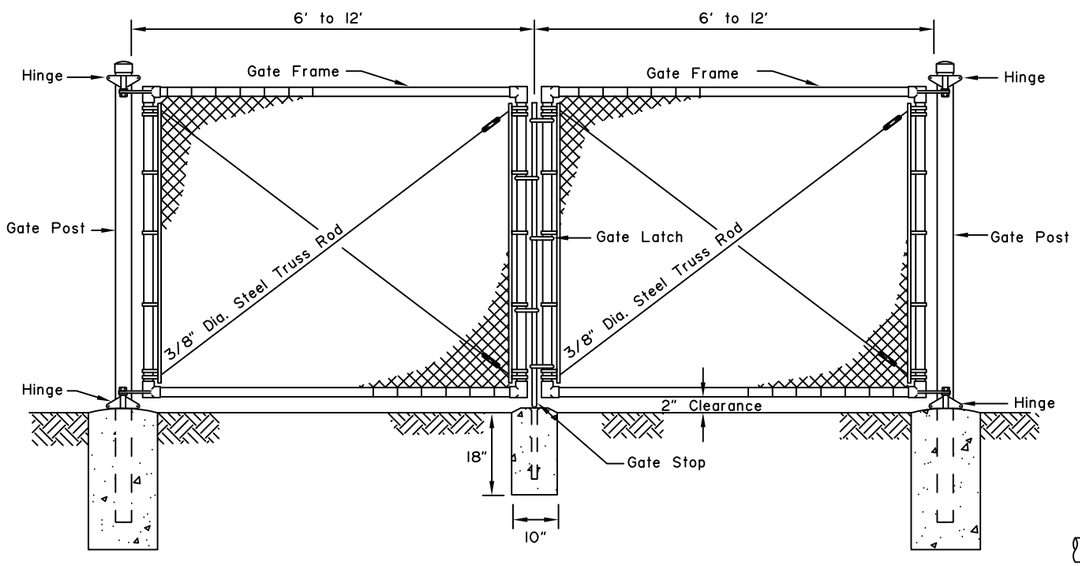


DOUBLE SWING GATE

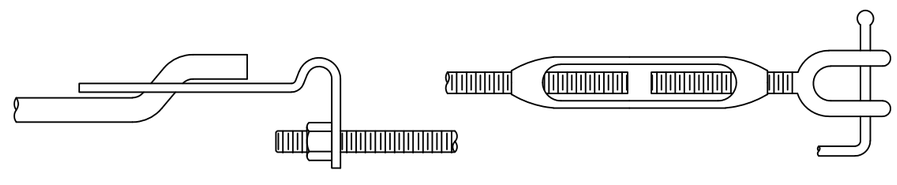

TYPICAL TRUSS ROD TIGHTENERS

State of Alaska DOT&PF
ALASKA STANDARD PLAN

**CHAIN LINK FENCE GATE**

Adopted as an Alaska Standard Plan by: Kenneth J. Fisher, P.E.
Chief Engineer

Adoption Date: 02/08/2019

Last Code and Stds. Review
By: Date:

Next Code and Standards Review date: 02/08/2029

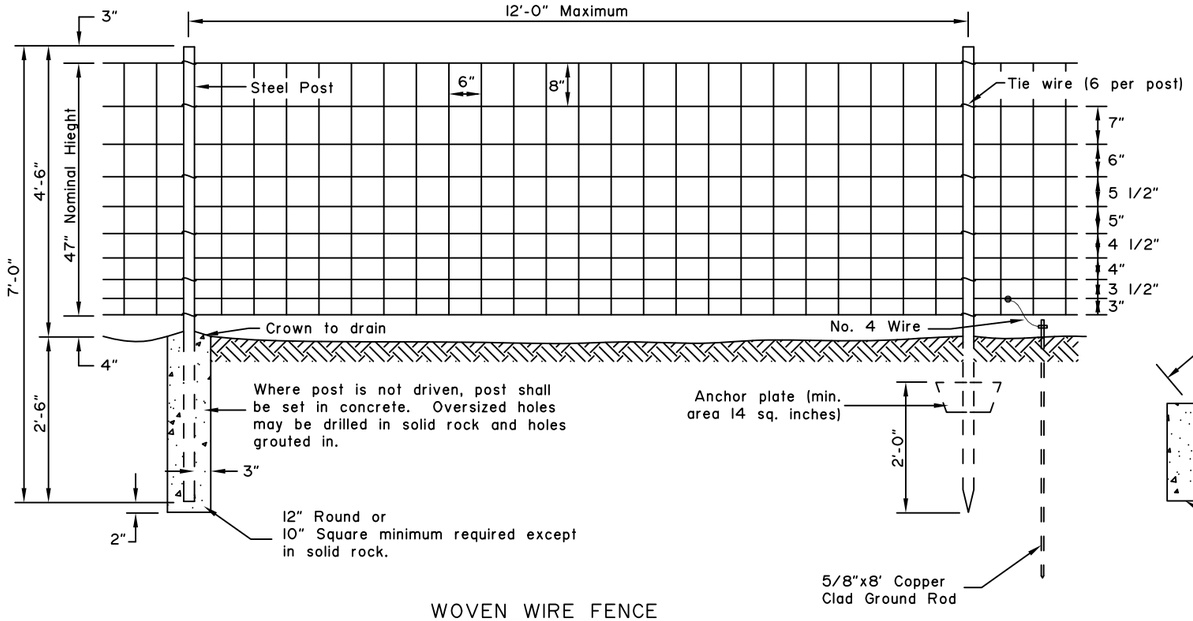


WOVEN WIRE FENCE

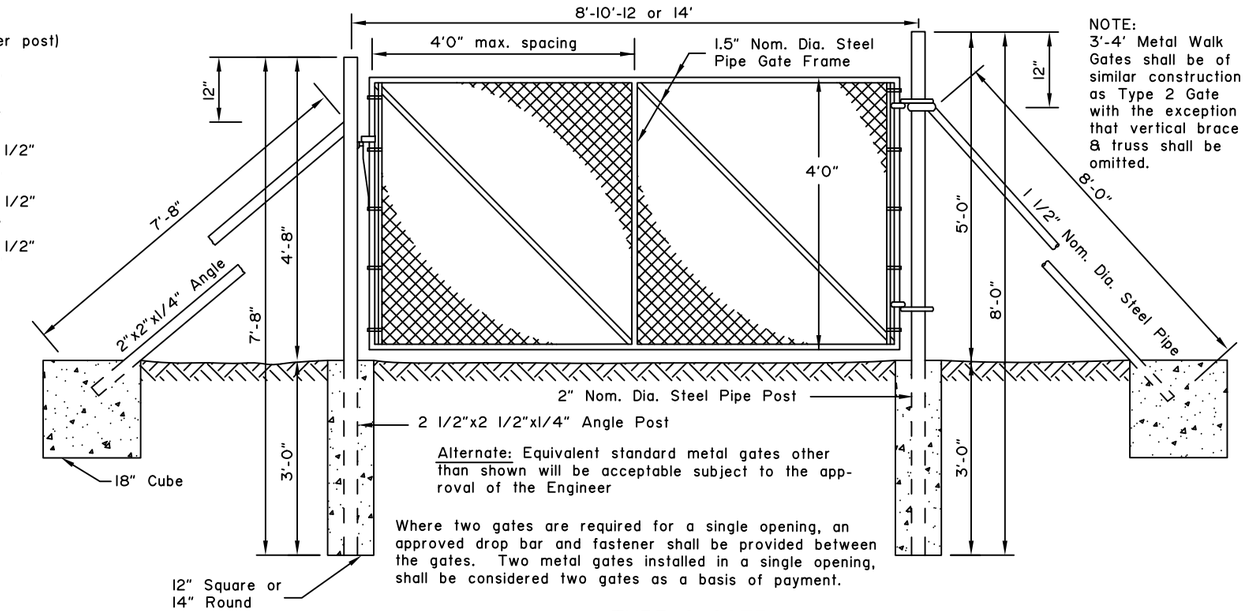


NOTE:
3'-4' Metal Walk Gates shall be of similar construction as Type 2 Gate with the exception that vertical brace & truss shall be omitted.

Alternate: Equivalent standard metal gates other than shown will be acceptable subject to the approval of the Engineer

Where two gates are required for a single opening, an approved drop bar and fastener shall be provided between the gates. Two metal gates installed in a single opening, shall be considered two gates as a basis of payment.

TYPE 2 GATE

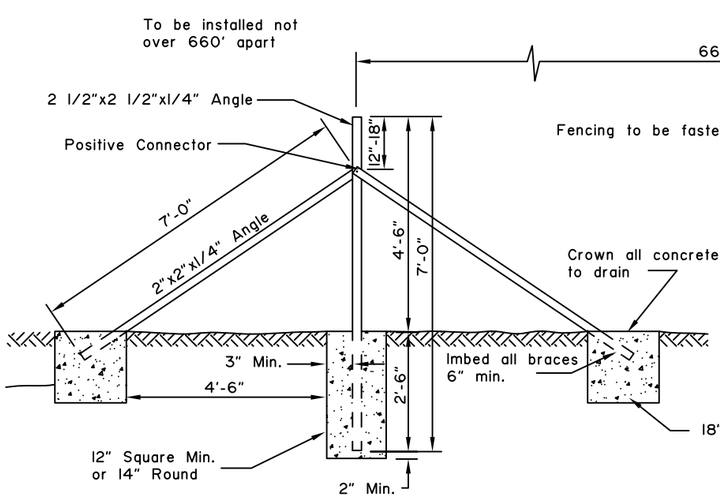


METAL LINE BRACE

Fencing to be fastened to posts as shown above.

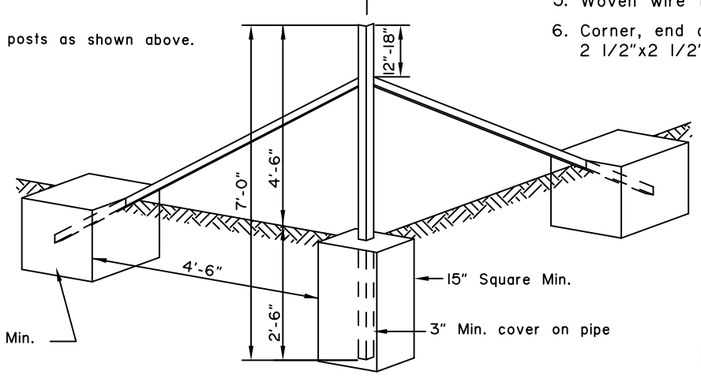


METAL CORNER BRACE

## GENERAL NOTES:

1. Gates shall be hung on standard angle or steel pipe posts.
2. Metal posts shall be angle steel or steel pipe with dimensions as shown and with the following nominal weights per linear foot: 1 1/2" Nom. Dia.-2.72 lbs., 2" Nom. Dia.-3.65 lbs.
3. Place fencing and gates where shown on plans.
4. Gate shall be manufactured of steel pipe not less than 1" Nom. Dia., (Nom. wt. 1.68 lbs. per linear foot) for frame and vertical brace. Wire mesh shall be 9 gage and affixed to the frame with 9 gage G.I. wire. Each gate shall be equiped with one standard adjustable diagonal truss rod from corner to corner. Hinges and 2-way self closing latch shall be of an approved rustproof malleable iron or steel.
5. Woven wire top and bottom strands shall be 9 gage intermediate strands and vertical fillers shall be 11 gage.
6. Corner, end and brace posts shall be 2" Nom. Dia. pipe, (Nom. wt. 3.65 lbs per linear foot) or 2 1/2"x2 1/2"x1/4" angle (Nom. wt. 4.1 lbs per linear foot).
7. Metal line posts (Nominal wt. 1.33 lbs. per linear foot) shall have knobs, punched web or corrugated edges to hold hold fencing.
8. Metal braces shall be 1 1/2" Nom. Dia. pipe (Nom. wt.2.72 lbs per linear foot) or 2"x2"x1/4" angle (Nom. wt. 3.19 lbs. per linear foot.)
9. Wire fencing shall be placed on side of post facing the highway. Special bracing or location may be required when fencing crosses or parallels streams, bodies of water or sags in the fence line.
10. Tie wires shall be 10 gage.
11. All wire, posts and hardware shall be galvanized. Weights and gages specified are minimums before galvanizing.

State of Alaska DOT&PF
ALASKA STANDARD PLAN

**WOVEN WIRE FENCE**

Adopted as an Alaska Standard Plan by: Kenneth J. Fisher, P.E.
Chief Engineer

Adoption Date: 02/08/2019

Last Code and Stds. Review
By: Date:

Next Code and Standards Review date: 02/08/2029

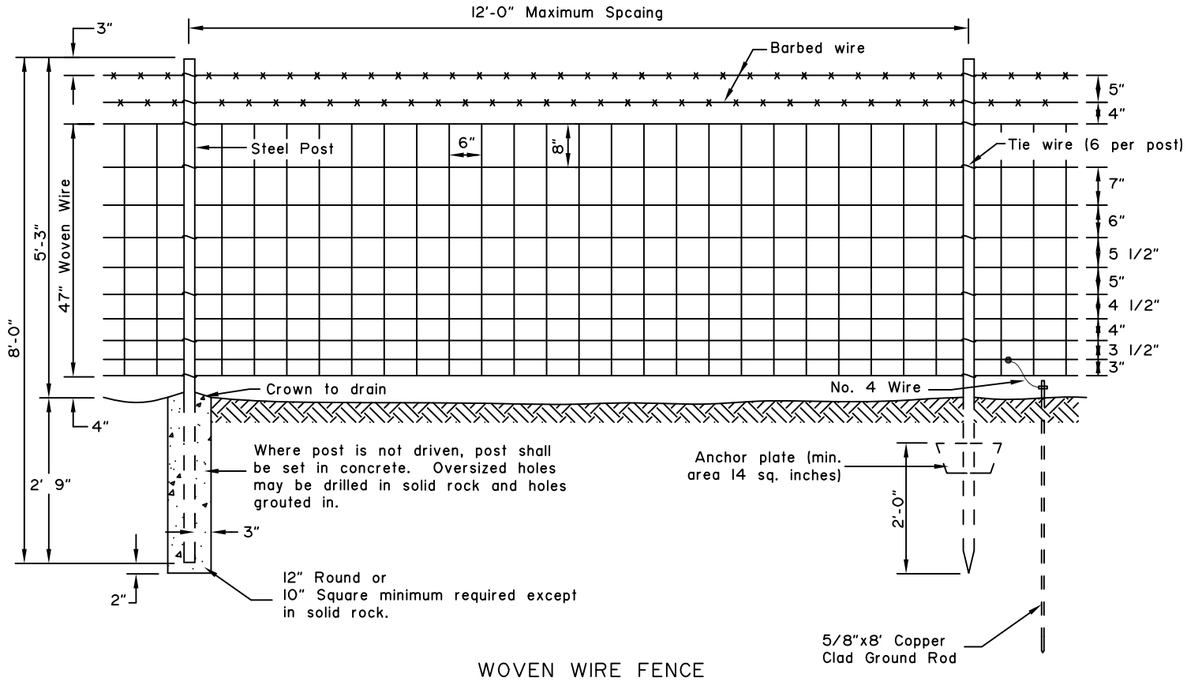


WOVEN WIRE FENCE

## GENERAL NOTES:

1. Gate shall be hung on standard angle or steel pipe posts.
2. Metal posts shall be angle steel or steel pipe with dimensions as shown and with the following nominal weights per linear foot: 1 1/2" Nominal Diameter-2.72 lbs, 2" Nominal Diameter-3.65 lbs.
3. Install fencing and gates where shown on plans.
4. Gate shall be manufactured of steel pipe not less than 1" Nominal Diameter, (Nominal wt. 1.68 lbs per linear foot) for frame and vertical brace. Wire mesh shall be 9 gage and affixed to the frame with 9 gage G.I. wire. Each gate shall be equiped with one standard adjustable diagonal truss rod from corner to corner. Hinges and 2-way self closing latch shall be of an approved rustproof malleable iron or steel.
5. Woven wire top and bottom strands shall be 9 gage intermediate strands and vertical fillers shall be 11 gage.
6. Corner, end and brace posts shall be 2" Nominal Diameter pipe. (Nominal wt. 3.65 lbs. per lnear foot) or 2 1/2"x2 1/2"x1/4" angle (Nominal wt. 4.1 lbs. per linear foot).
7. Metal line posts (Nominal wt. 1.33 lbs. per lnear foot) shall have knobs, punched web or corrugated edges to hold fencing.
8. Provide metal braces made of 1 1/2" nominal diameter pipe with a nominal weight of 2.72 lbs per linear foot or 2"x2"x1/4" angle with a nominal weight of 3.19 lbs per linear foot.
9. Wire fencing shall be placed on side of post facing the highway. Special bracing or location may be required when fencing crosses or parallels streams, bodies of water or sags in the fence line.
10. Tie wires shall be 10 gage.
11. All wire, posts and hardware shall be galvanized. Weights and gages specified are minimums before galvanizing.
12. Barbed wire shall be 12 1/2 gage, with 4 point 14 gage round barbs at 5" maximum spacing.

NOTE: 3'-4' Metal Walk Gates shall be of a similar construction as Type 2 Gate with the exception that vertical brace & truss shall be omitted.

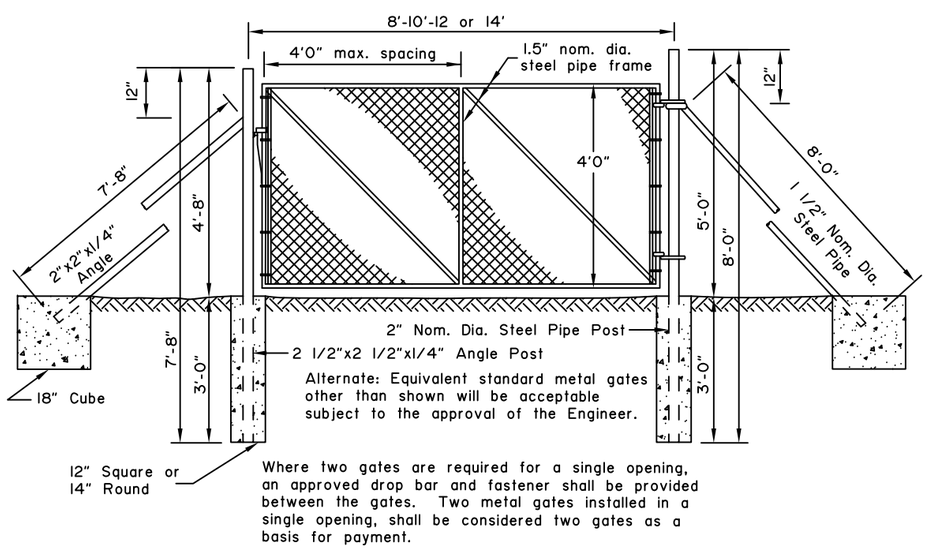


TYPE 2 GATE

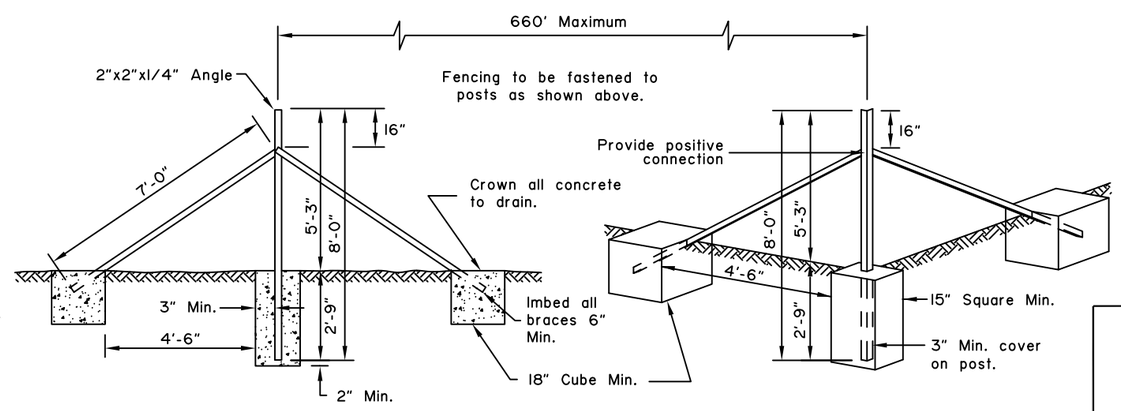


METAL LINE BRACE

Installed at not more than 660' apart.

METAL CORNER BRACE

TYPICAL BRACING DETAIL

State of Alaska DOT&PF
ALASKA STANDARD PLAN

**WOVEN WIRE FENCE WITH BARBED WIRE**

Adopted as an Alaska Standard Plan by: Kenneth J. Fisher, P.E. Chief Engineer

Adoption Date: 02/08/2019

Last Code and Stds. Review
By: Date:

Next Code and Standards Review date: 02/08/2029

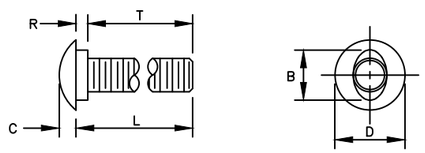


| B | C | D | L (Length) | R | T (Thread Length) |
|---|---|---|---|---|---|
| 15/16" | 5/16" | 1 5/16" or 1 7/16" | As Required | 7/32" | As Required |

5/8" BUTTONHEAD BOLT
(FBB01–05)

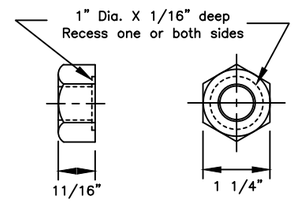


5/8" Dia. RECESSED HEX NUT
(FBB01–05)

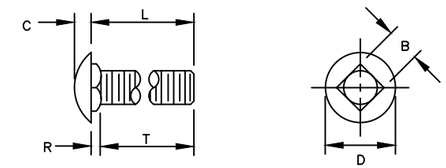


| B | C | D | L (Length) | R | T (Thread Length) |
|---|---|---|---|---|---|
| 5/8" | 5/16" | 1 5/16" | As Required | 3/16" | As Required |

5/8" Dia. CARRIAGE BOLT
(FBC10–20)

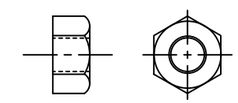

STANDARD HEX NUT

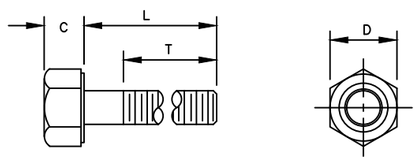


| Bolt Size | C | D | L (Length) | T (Thread Length) |
|---|---|---|---|---|
| 5/16" | —— | —— | 1 1/2" | 7/8" |
| 5/16" | —— | —— | 1" | 1" |
| 3/8" | —— | —— | 7 1/2" | 1 1/2" |
| 1/2" | —— | —— | 1 1/2" | 1 1/2" |
| 1/2" | —— | —— | 1 1/4" | 1 1/4" |
| 5/8" H.S. | 5/16" | 7/8" | 8" | 1 1/2" |
| 5/8"–11 | —— | —— | 1 1/2" | 1 1/2" |
| 3/4" | —— | —— | 1 1/2" | 1 1/2" |
| 3/4" | —— | —— | As Required | 2" |
| 3/4" H.S. | 15/32" | 1 1/4" | 2" | 1 1/2" |

STANDARD HEX BOLTS

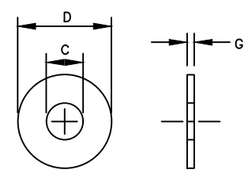


| For Bolt ø | C | D | G |
|---|---|---|---|
| 3/8" | 7/16" | 1" | 5/64" |
| 1/2" | 17/32" | 1 1/16" | 3/32" |
| 1/2" H.S. | 17/32" | 1 1/16" | 3/32" |
| 5/8" | 11/16" | 1 3/4" | 9/64" |
| 3/4" | 13/16" | 1 15/32" | 9/64" |
| 3/4" H.S. | 13/16" | 2" | 5/32" |
| 1" | 1 1/16" | 2" | 9/64" |

STANDARD STEEL WASHERS

## GENERAL NOTES:

1. All covered hardware shall comply with the Task Force 13 (TF13) Guide to Standardized Roadside Safety Hardware online publication. Designators given when possible in parentheses.

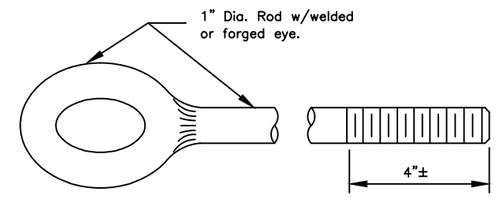


EYE BOLT

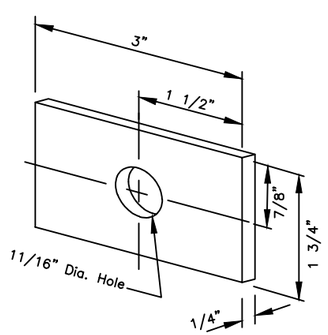


FLAT PLATE WASHER

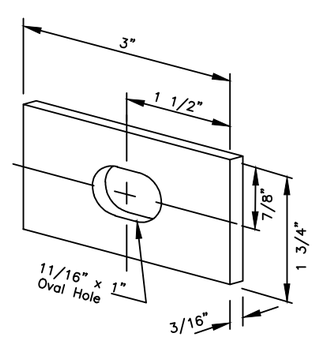


RECTANGULAR POST BOLT WASHER
(FWR03)

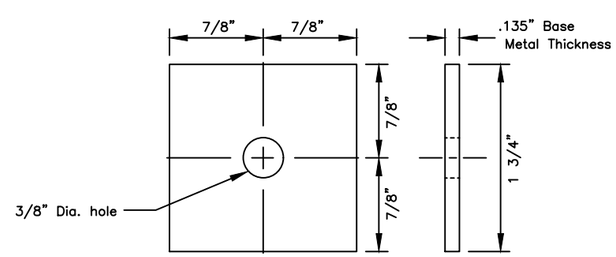


SQUARE STEEL WASHER
(FWR01)

State of Alaska DOT&PF
ALASKA STANDARD PLAN

STANDARD GUARDRAIL HARDWARE
(NUTS, BOLTS & WASHERS)

Adopted as an Alaska Standard Plan by: Carolyn Morehouse
Carolyn Morehouse, P.E.
Chief Engineer

Adoption Date: 7/17/2020

Last Code and Stds. Review
By: KLK Date: 7/8/2020

Next Code and Standards Review Date: 7/8/2030

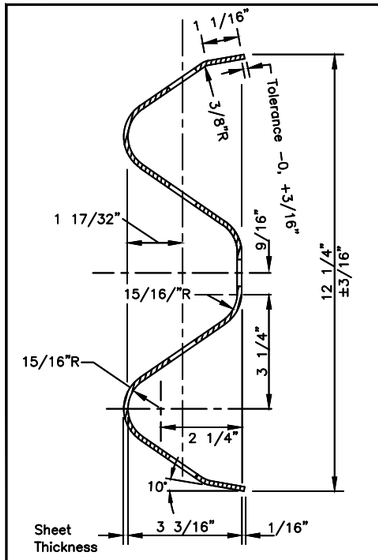


SECTION A–A
(cross section same as RWM02a–b)

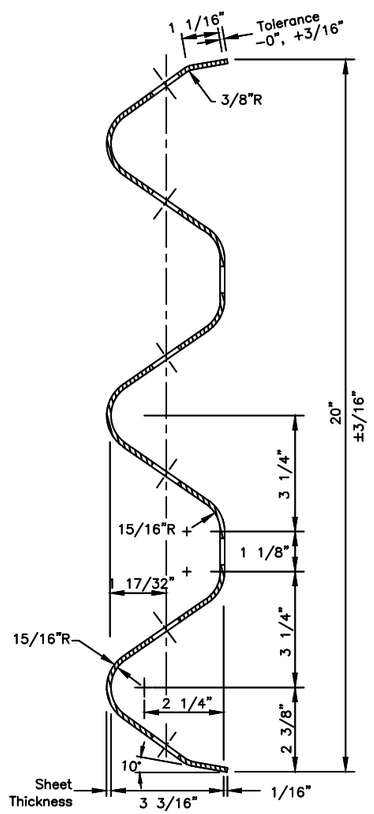


SECTION C–C
(RTM01a–02b)

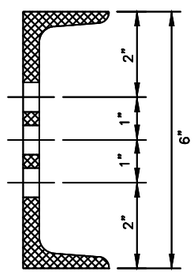


SECTION B–B

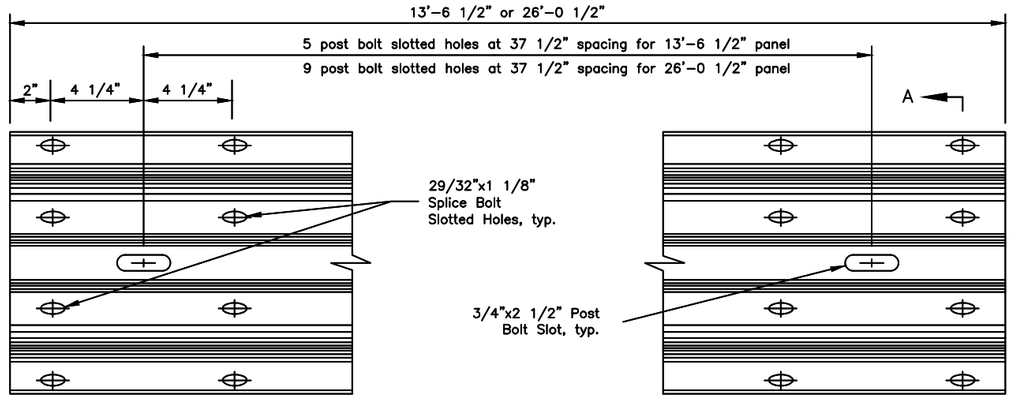


STANDARD W–BEAM PANEL (RWM04a–b)

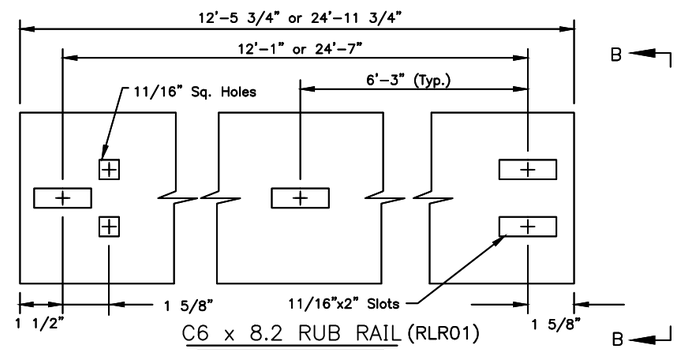


C6 x 8.2 RUB RAIL (RLR01)
ASTM A36 STEEL

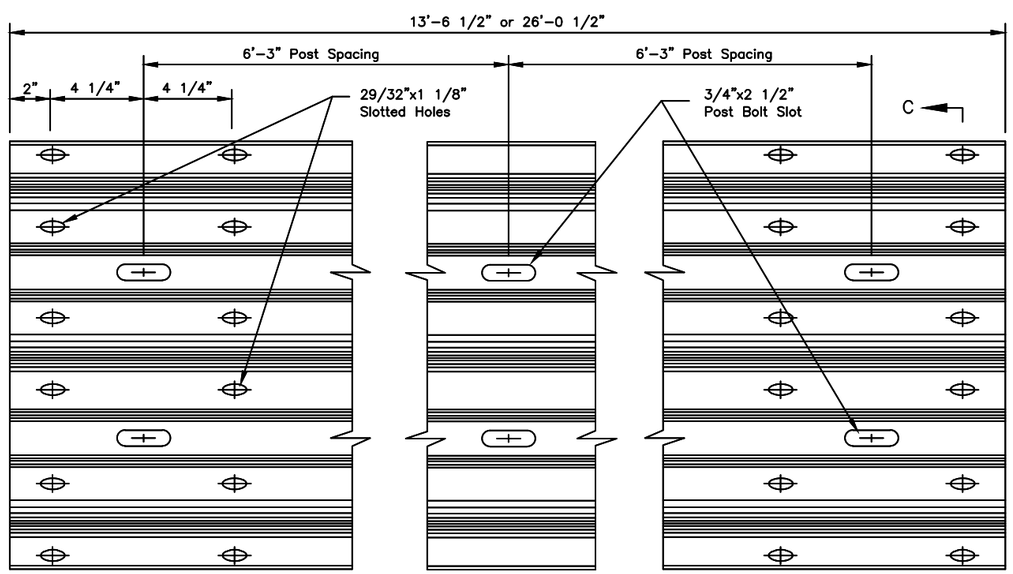


STANDARD THRIE BEAM PANEL (RTM01a–02b)

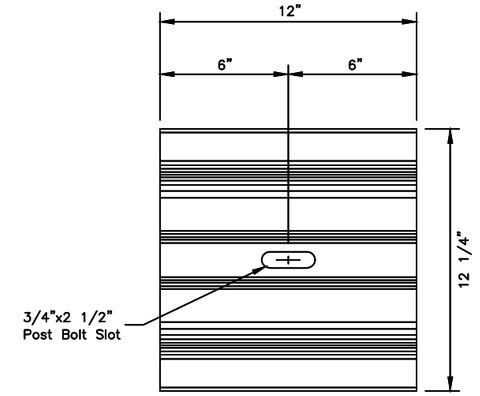


W–BEAM BACKUP PLATE
(RWB01a–b)

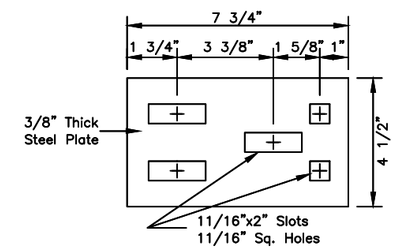


SPLICE PLATE (RLR01)
ASTM A36 STEEL

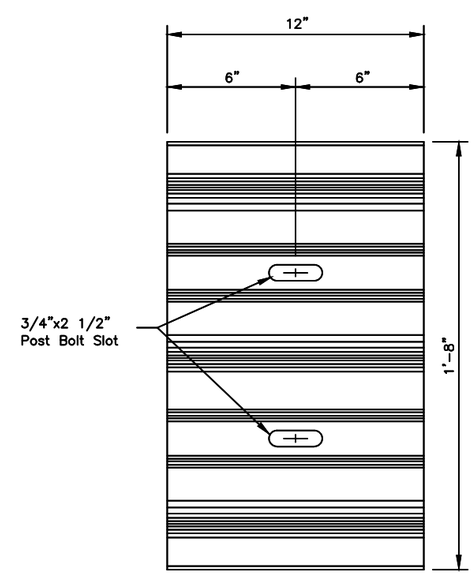


THRIE BEAM BACKUP PLATE
(RTB01a–02b)

## GENERAL NOTES:

1. All covered hardware shall comply with the Task Force 13 (TF13) Guide to Standardized Roadside Safety Hardware online publication. Designators given when possible in parentheses.
2. Install back–up plates between blockouts and w–beam or thrie–beam rail at intermediate (non–splice) posts when steel blockouts are used but not with wood, rubber, plastic, or other approved blockouts.

State of Alaska DOT&PF
ALASKA STANDARD PLAN

STANDARD GUARDRAIL HARDWARE (RAILS AND SPLICES)

Adopted as an Alaska Standard Plan by: Carolyn Morehouse
Carolyn Morehouse, P.E.
Chief Engineer

Adoption Date: 7/17/2020

Last Code and Stds. Review
By: KLK Date: 7/8/2020

Next Code and Standards Review Date: 7/8/2030

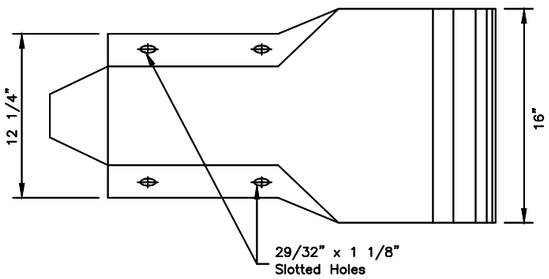


PROFILE

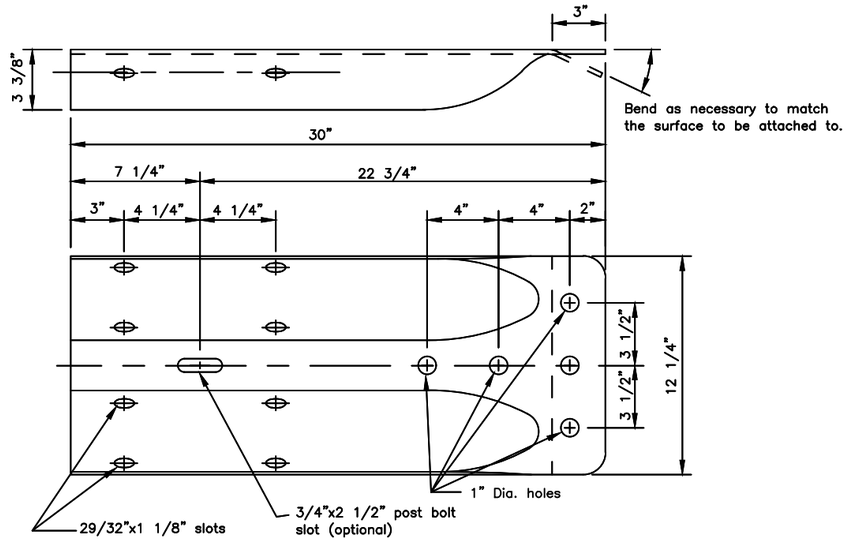


STANDARD W-BEAM TERMINAL CONNECTOR
(RWE02)

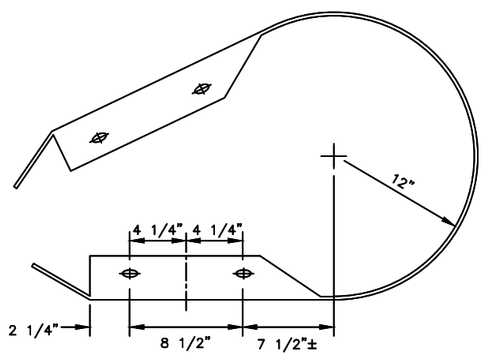


W-BEAM PLAN VIEW
*Radius to be specified on the plans

STANDARD W-BEAM END SECTION
(RWE06)

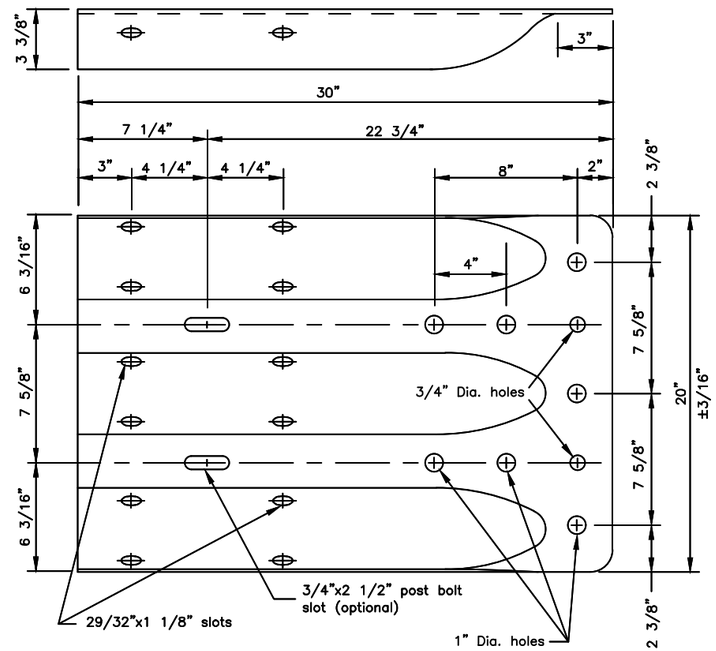


STANDARD THRIE BEAM TERMINAL CONNECTOR
(RTE01b)

## GENERAL NOTES:

1. W-Beam and Thrie Beam Terminal Connectors shall conform to AASHTO M 180, Class B, Type II.
2. W-Beam end sections shall conform to AASHTO M 180, Class A, Type II.
3. All covered hardware shall comply with the Task Force 13 (TF13) Guide to Standardized Roadside Safety Hardware online publication. Designators given when possible in parentheses.

**State of Alaska DOT&PF**
ALASKA STANDARD PLAN

STANDARD GUARDRAIL HARDWARE (TERMINAL CONNECTORS)

Adopted as an Alaska Standard Plan by: Carolyn Morehouse
Carolyn Morehouse, P.E.
Chief Engineer

Adoption Date: 7/17/2020

Last Code and Stds. Review
By: KLK Date: 7/8/2020

Next Code and Standards Review Date: 7/8/2030

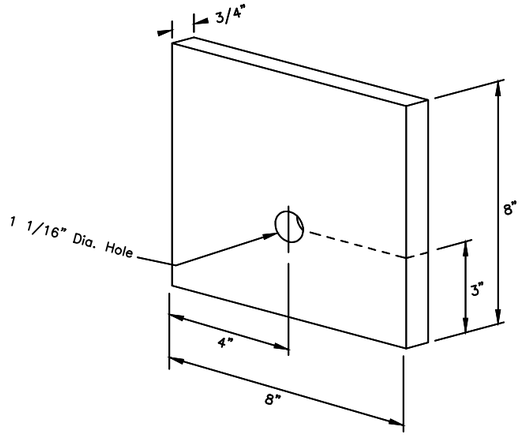


BEARING PLATE for CRT TERMINAL ANCHOR
(FPB01)

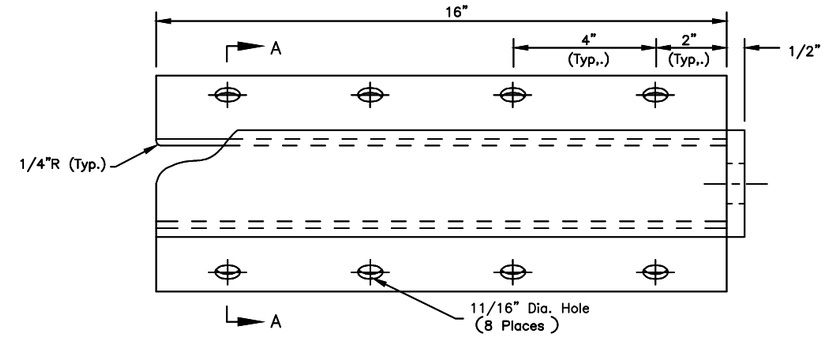


CABLE ANCHOR PLATE
(FPA01)

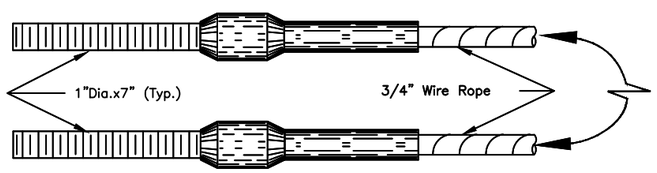


SWAGED FITTING DETAIL
(FCA01–02)

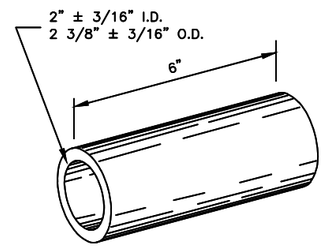


SLEEVE DETAIL
(FMM02)

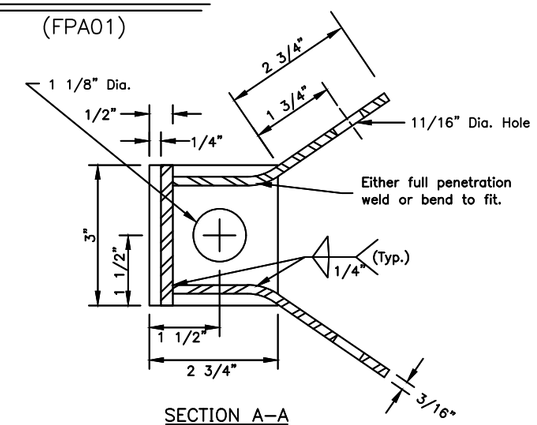


SECTION A–A

CONTROLLED RELEASE TERMINAL HARDWARE DETAILS

## GENERAL NOTES:

1. Cable Anchor Plate may be formed in single unit or welded fabrication.
2. Anchor Cable Assembly must conform to AASHTO M 30 with Type II Wire Rope.
3. Provide Sleeve for Wood Posts meeting the requirements of ASTM A53 and made of 2–inch galvanized standard pipe. Sleeve shall be a tight, pressed fit in post.
4. Attach radius ID plates to all shop–bent guardrail sections. Bolt the ID plates to the back side of the guardrail panel with the lower splice bolt nearest the P.C. of the radius.
5. Show the Rail bend radius, in feet, as "XX" on the radius ID plate. Digits shall be etched or stamped and have a min. height of 1 1/2" and a max. width of 3/4". Galvanize the plate after the digits are marked.
6. All covered hardware shall comply with the Task Force 13 (TF13) Guide to Standardized Roadside Safety Hardware online publication. Designators given when possible in parentheses.

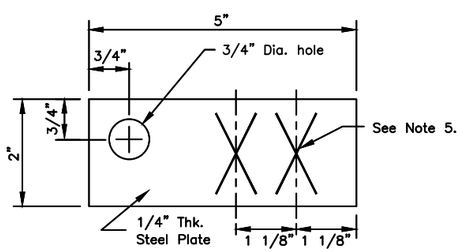


RADIUS I.D. PLATE

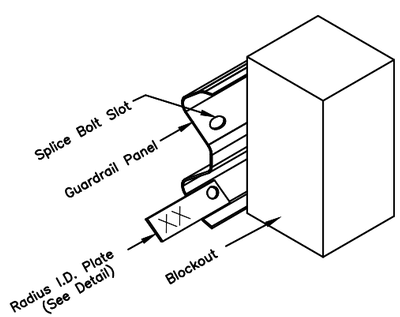


RADIUS I.D. PLATE MOUNTING DETAIL

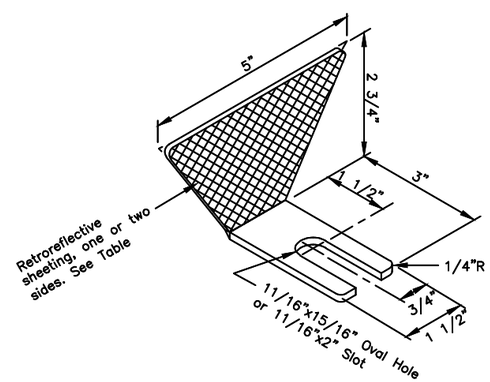


GUARDRAIL REFLECTOR

Guardrail Reflector Table

| Type | Color | Reflectorized |
|---|---|---|
| A | White | Front & Rear |
| B | White | Front |
| C | Yellow | Front |
| D | Yellow | Front & Rear |

State of Alaska DOT&PF
ALASKA STANDARD PLAN

STANDARD GUARDRAIL HARDWARE (MISCELLANEOUS)

Adopted as an Alaska Standard Plan by: Carolyn Morehouse
Carolyn Morehouse, P.E.
Chief Engineer

Adoption Date: 7/17/2020

Last Code and Stds. Review
By: KLK Date: 7/8/2020

Next Code and Standards Review Date: 7/8/2030

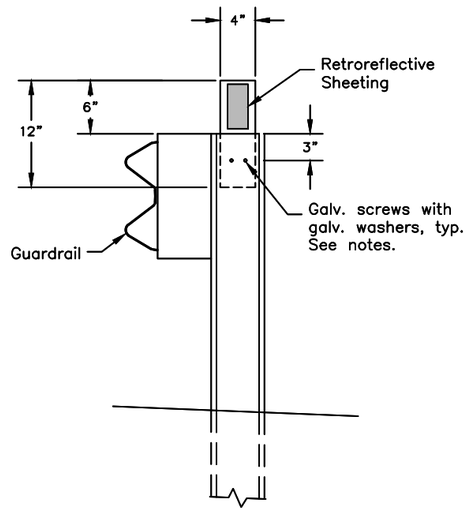


GUARDRAIL FLEXIBLE DELINEATOR DETAIL

(Steel post shown – similar for wood post)

## CONSTRUCTION NOTES

1. Install guardrail flexible delineators where shown on the plans.
2. Install guardrail flexible delineators at 50 foot spacing, unless otherwise noted on the plans. Install not less than 2 delineators per guardrail run.
3. Use 3" x 5" white/yellow/red retroreflective sheeting as required per Standard Plan T–05. Install retroreflective sheeting on both sides of delineator on two–way roads.
4. Attach 4" x 12" flexible delineators to the top of new guardrail posts, on the trailing side of the posts relative to the adjacent lane's direction of travel.
5. Use 2 each 1/4" dia. x 1–1/2" long galvanized lag screws for attaching to wood posts and 2 each 1/4" dia. x 3/4" long galvanized self–drilling fasteners for steel posts. Install a galvanized washer between the fastener head and the flexible delineator.

**State of Alaska DOT&PF**
ALASKA STANDARD PLAN

STANDARD GUARDRAIL HARDWARE (FLEXIBLE DELINEATORS)

Adopted as an Alaska Standard Plan by: Carolyn Morehouse
Carolyn Morehouse, P.E.
Chief Engineer

Adoption Date: 7/17/2020

Last Code and Stds. Review
By: KLK Date: 7/8/2020

Next Code and Standards Review Date: 7/8/2030

# G-01.02

SHEET | of |

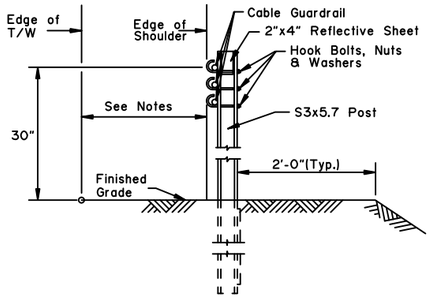


LINE POST INSTALLATION

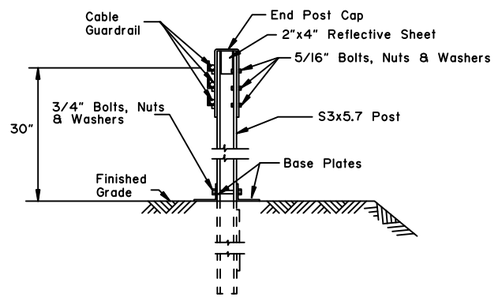


END POST INSTALLATION

REFLECTIVE SHEET REPLACEMENT

| *Type | Color | Placement of Sheeting |
|---|---|---|
| A | White | Front & Rear |
| B | White | Front |
| C | Yellow | Front |
| D | Yellow | Front & Rear |

*See Notes

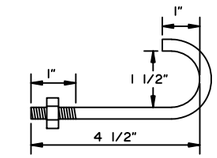


5/16" Dia. HOOK BOLT

## GENERAL NOTES:

1. All fittings, cable splices, cable ends etc., shall be designed to develop the full strength of the cable assemblies.
2. Hook Bolts, as installed shall develop an ultimate pull open strength of between 500lbs. and 1000lbs. applied in a direction normal to the longitudinal axis of the post.
3. 3/4" Cable & Cable Fittings shall conform to AASHTO M30 Class A.
4. Steel Posts shall conform to ASTM A36, Steel Fasteners shall conform to ASTM A307.
5. Face of cable guardrail shall be on edge of shoulder and a minimum distance of 4'-0" from Traveled Way.
6. All ferrous metals shall be galvanized to conform to ASTM A123 or ASTM A153. No punching, drilling, welding or cutting shall be permitted after galvanizing.
7. Line Post Spacing to be used for:

| CLEAR DISTANCE | POST SPACING |
|---|---|
| 7' to 8' | 4' |
| 8' to 9 1/2' | 8' |
| 9 1/2' to 11' | 12' |
| Over 11' | 16' |

8. Line Post Spacing to be used for:

| CURVE RADIUS | POST SPACING |
|---|---|
| Over 717' | 16' |
| 220' to 717' | 12' |
| 111' to 219' | 6' |
| 76' to 110' | 4' |
| 50' to 75' | 3' |

Except when clear distance dictates closer spacing.

9. Guardrail Reflective Sheet shall be mounted at 48' centers beginning with first post.
10. All barrier hardware as shown in ARTBA "A Guide To Standardized Highway Barrier Rail Hardware", latest edition, is acceptable.
11. See Standard Drawings, "Standard Guardrail Hardware" for hardware details.

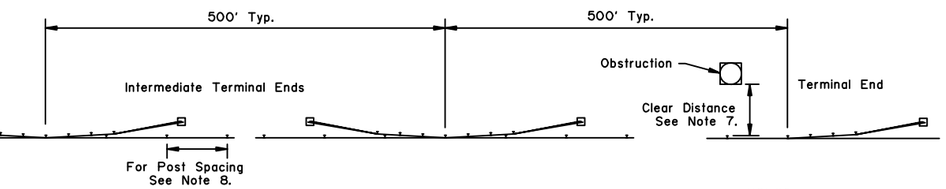


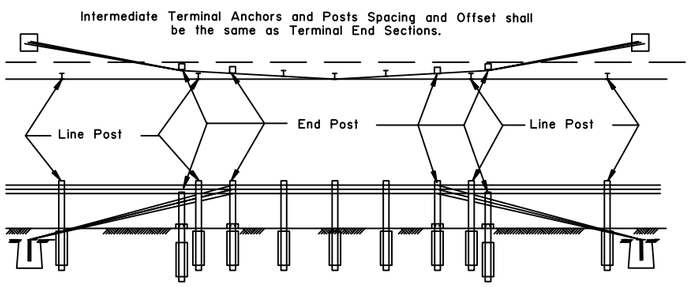


CABLE GUARDRAIL INTERMEDIATE TERMINAL ENDS

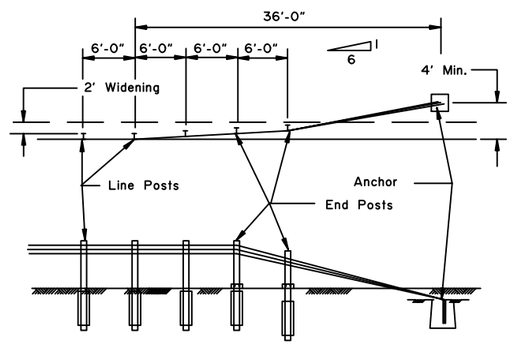


CABLE GUARDRAIL TERMINAL END

COMPENSATING CABLE END ASSEMBLY

TURNBUCKLE CABLE END ASSEMBLY

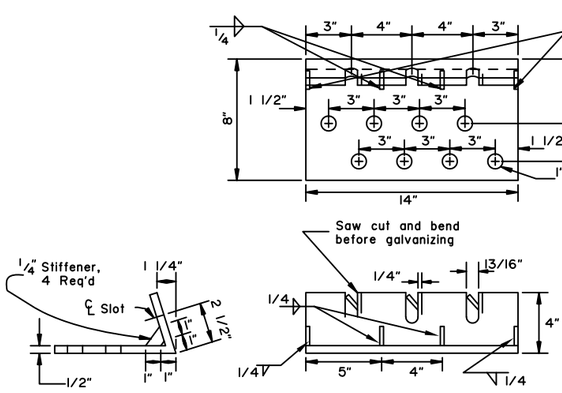


ANCHOR ANGLE

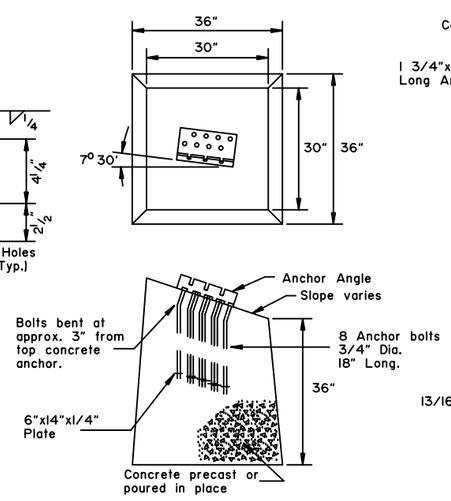


CABLE ANCHOR

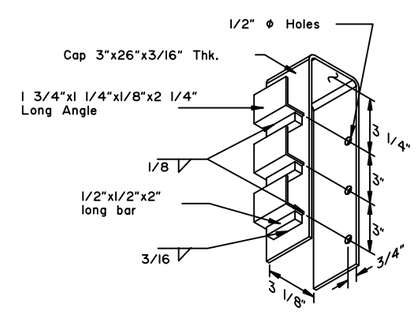


END POST CAP

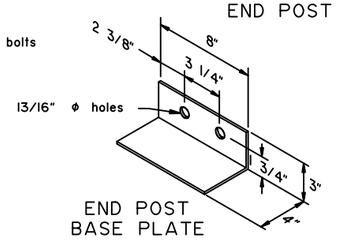


END POST BASE PLATE

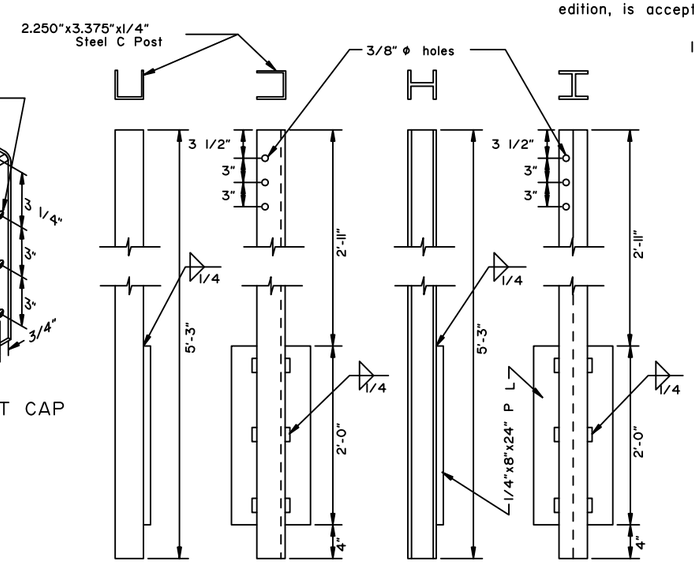


ALTERNATE 3" "C" POST

S3x5.7 CABLE POST

State of Alaska DOT&PF
ALASKA STANDARD PLAN

G1S
CABLE GUARDRAIL

Adopted as an Alaska Standard Plan by: Kenneth J. Fisher, P.E.
Chief Engineer

Adoption Date: 02/08/2019

Last Code and Stds. Review
By: Date:

Next Code and Standards Review date: 02/08/2029

G-01.02

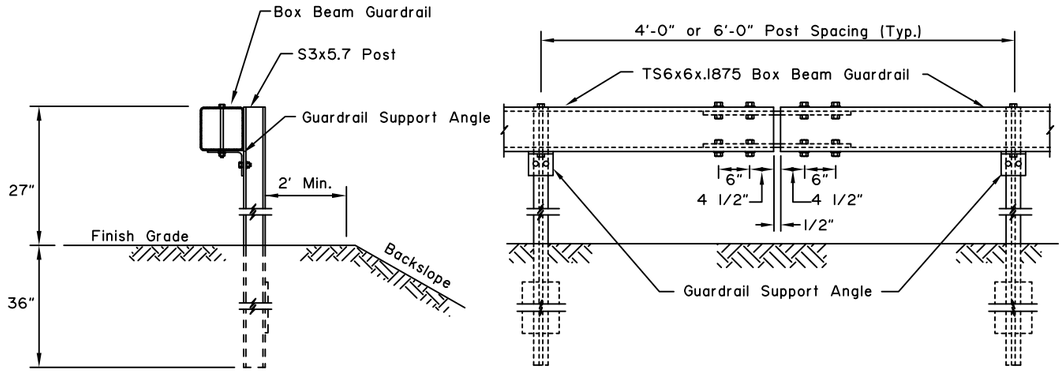


POST INSTALLATION

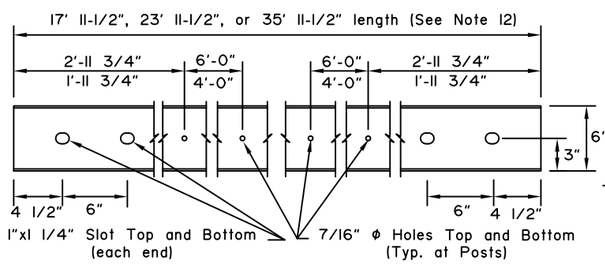


TS6 x 6 x .1875 BOX BEAM GUARDRAIL

(RBM01)

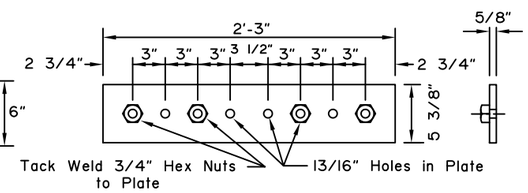


SPLICE PLATE

(RBS01)

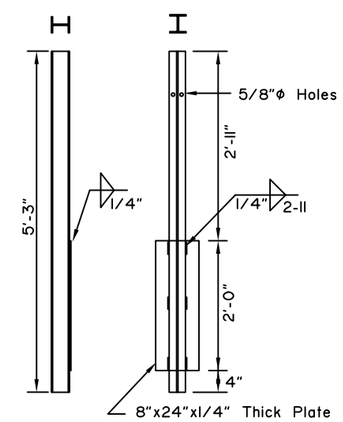


S3x5.7 BOX BEAM GUARDRAIL POST

(PSE08)

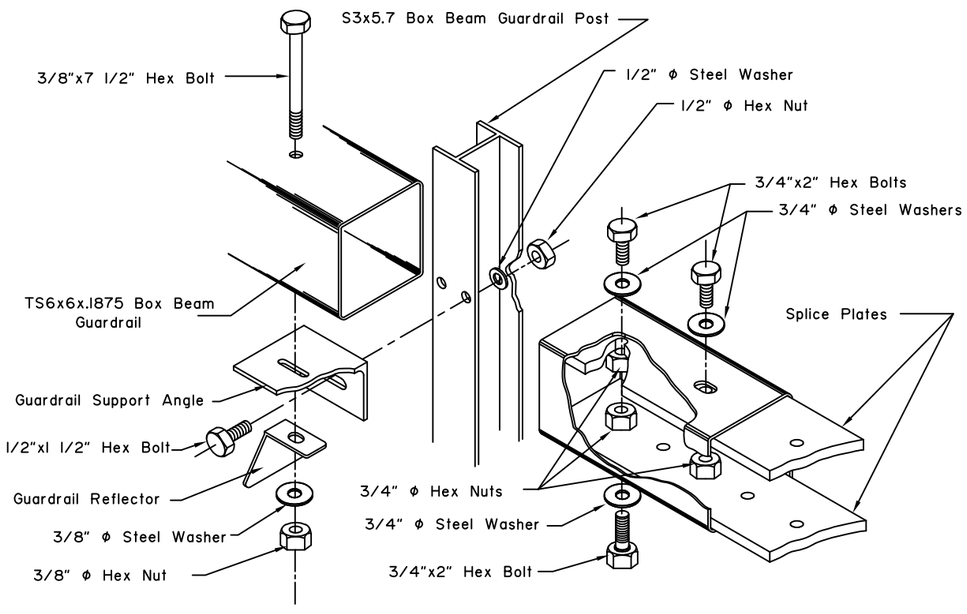


ASSEMBLY DETAIL

(RBS02)

## GENERAL NOTES:

1. No fixed objects are allowed closer than 4' 0" from the back of the guardrail
2. Use a post spacing of 6' 0" when there are no fixed objects within 5' 0" from back of guardrail and the backslope is 3:1 or flatter.
3. Use a post spacing of 4' 0" when there are fixed objects within 4' 0" to 5' 0" from the back of guardrail or when backslopes are steeper than 3:1.
4. Shop form guardrail on curves having a radius of less than 717'.
5. Steel tube for box beam guardrail must conform to ASTM A500 Grade B or ASTM A501.
6. Steel bolts and nuts for splice plates and box beam guardrail connections must conform to ASTM A325 for bolt and ASTM A563 Grade A for nuts. All other bolts, nuts and washers shall meet AASHTO M 180.
7. No galvanizing permitted between splice plates and box beam guardrail.
8. Mount guardrail reflectors at 48' centers beginning with the first post. Use Type A Reflectors unless shown otherwise on the plans.
9. Provide reflectors meeting the requirements of Section 606 of the Standard Specifications
10. All barrier hardware as shown in ARTBA "A Guide to Standardized Highway Barrier Rail Hardware" is acceptable. Designators given when possible in parentheses.
11. See Standard Drawing G-00 for hardware details.
12. Select rail lengths compatible with the post spacings shown on the plans or as indicated in Notes 2 and 3.

## DESIGN NOTES:

1. Box beam guardrail requires a minimum 125' development length.

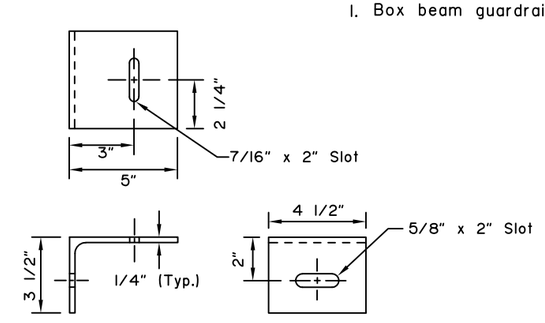


GUARDRAIL SUPPORT ANGLE

(FPP01)

Note: Drawing not to scale

State of Alaska DOT&PF
ALASKA STANDARD PLAN

G3S
BOX BEAM GUARDRAIL

Adopted as an Alaska Standard Plan by: Kenneth J. Fisher, P.E.
Chief Engineer

Adoption Date: 02/08/2019

Last Code and Stds. Review
By: Date:

Next Code and Standards Review date: 02/08/2029

G-03.03

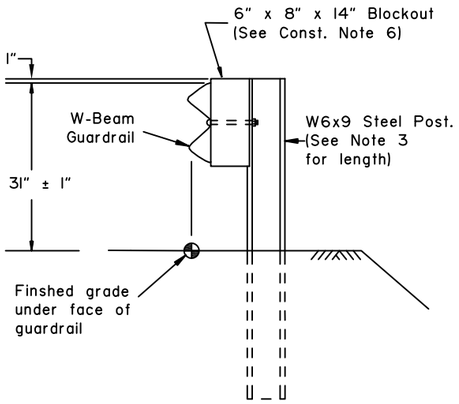


TYPE I POST INSTALLATION

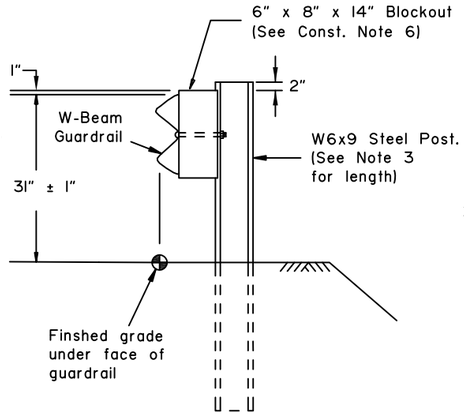


TYPE II POST INSTALLATION

(Facilitates raising rail for future overlays.)

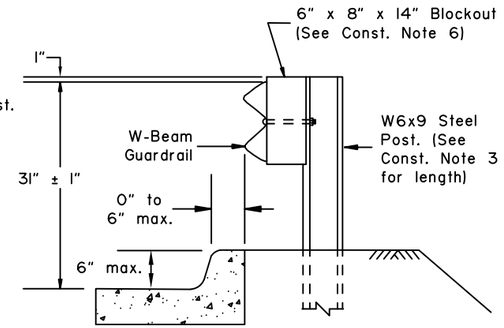


TYPE III POST INSTALLATION

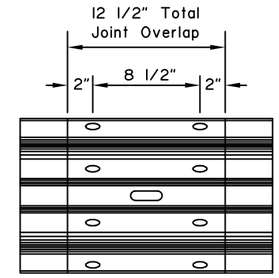


SPLICE DETAIL

(At mid span between posts only.
Bolts not shown for clarity)

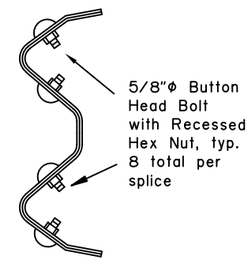


SPLICE
CROSS-SECTION

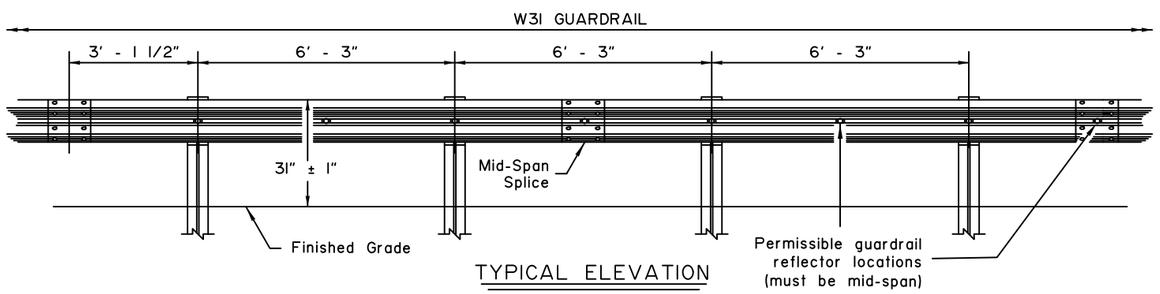


TYPICAL ELEVATION

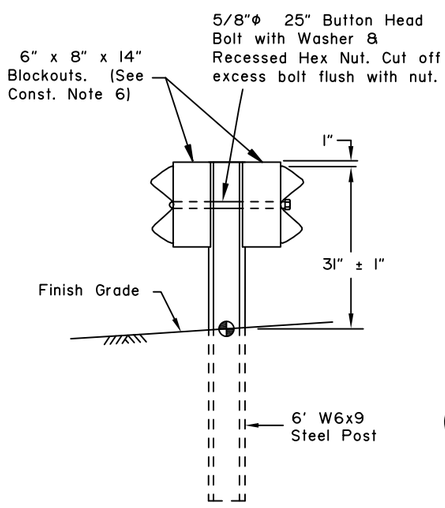


TYPE IV DOUBLE SIDED INSTALLATION

GUARDRAIL
REFLECTOR

(See Const. Note 5)

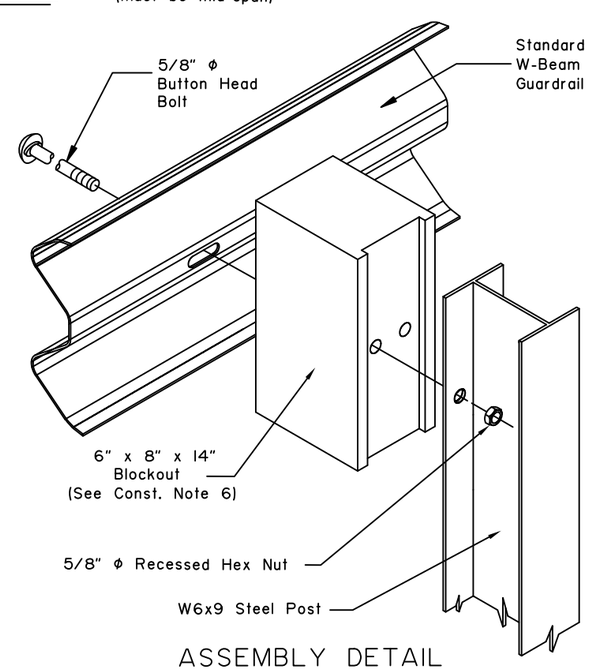


ASSEMBLY DETAIL

(Type I post shown)

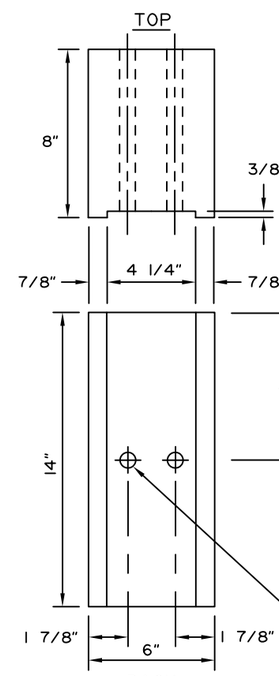


6" x 8"
BLOCKOUT

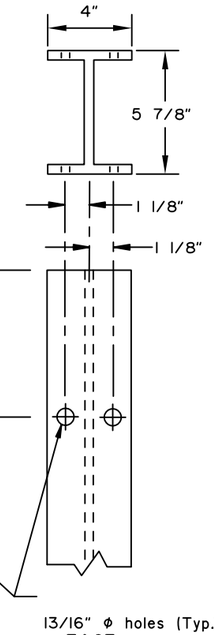


W6x9
STEEL POST

## CONSTRUCTION NOTES:

1. Provide hardware compliant with the Task Force 13 (TF13) Guide to Standardized Roadside Safety Hardware.
2. See Standard Plan G-00 for hardware details not shown on this drawing.
3. See Standard Plan G-10 for post lengths corresponding to different combinations of slope and behind-post embankment width.
4. Typical post spacing is 6'-3" center to center.
5. Attach guardrail reflector to guardrail using a 5/8" button head bolt with 5/8" recessed head hex nut and steel washer at location shown in the Typical Elevation. Install reflectors every 25' on tangents and every 12.5' on curves starting 100' before the P.C. and ending 100' after the P.T.
6. Use wood or synthetic blockouts designed, tested, and passed per MASH for use with steel posts. Either bolt hole on the blockout may be used for attachment.
7. Use a 25 linear foot transition to match differing height of existing or new rail elements and end treatments - see Standard Plan G-11.
8. W6x8.5 steel post may be substituted for W6x9 steel post.
9. Install flexible delineators on guardrail posts when called for in the contract. See Standard Plan G-00 for guardrail flexible delineator details.

## DESIGN NOTES:

1. No fixed objects allowed within 36" of the back side of guardrail post.
2. This barrier is acceptable under MASH Tests 3-10 and 3-11.

State of Alaska DOT&PF
ALASKA STANDARD PLAN

**STEEL POST W31 GUARDRAIL**

Adopted as an Alaska Standard Plan by: Carolyn Morehouse
Carolyn Morehouse, P.E.
Chief Engineer

Adoption Date: 05/15/2019

Last Code and Stds. Review
By: LRG Date: 5/15/2019

Next Code and Standards Review date: 5/15/2029

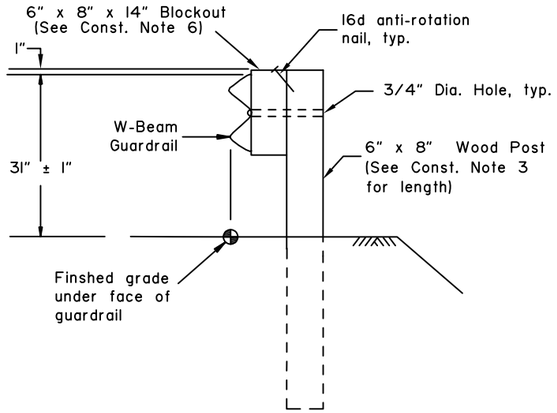


TYPE I POST INSTALLATION

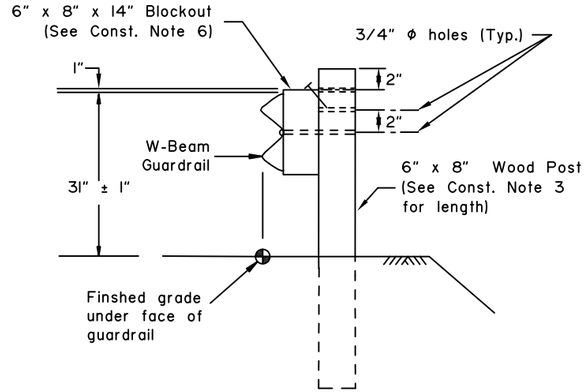


TYPE II POST INSTALLATION

(Facilitates raising rail for future overlays.)

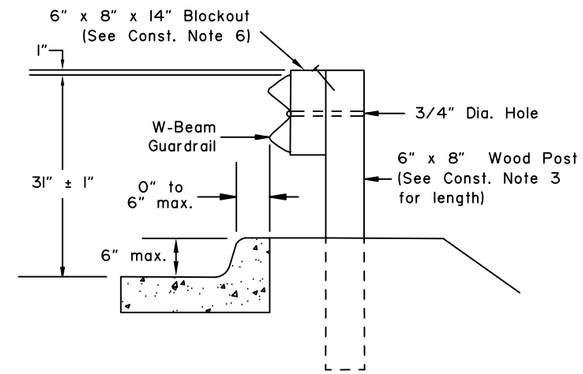


TYPE III POST INSTALLATION

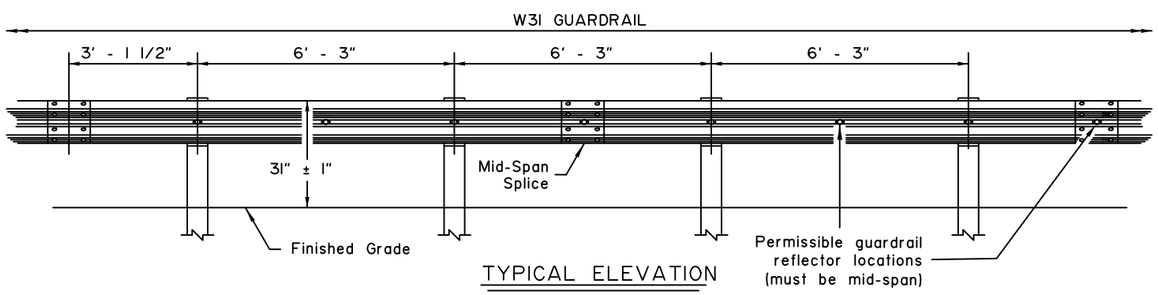


TYPICAL ELEVATION

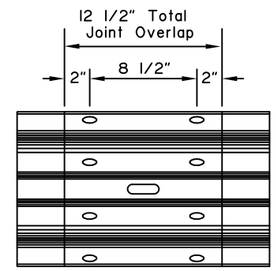


SPLICE DETAIL

(At mid-span between posts only. Bolts not shown for clarity.)

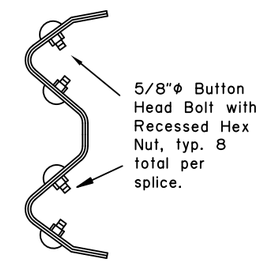


SPLICE CROSS-SECTION

## CONSTRUCTION NOTES:

1. Provide hardware compliant with the Task Force 13 (TF13) Guide to Standardized Roadside Safety Hardware.
2. See Standard Plan G-00 for hardware details.
3. See Standard Plan G-10 for post lengths corresponding to different combinations of slope and behind-post embankment width.
4. Typical post spacing is 6'-3" center to center.
5. Attach guardrail reflector using a 5/8" button head bolt with 5/8" recessed head hex nut and steel washer at the location shown on the Typical Elevation. Install reflectors every 25' on tangents and every 12.5' on curves starting 100' before the P.C. and ending 100' after the P.T.
6. Use wood blockouts designed, tested, and passed per MASH to be used with wood posts.
7. Use 25 linear foot transition panel to match differing height of existing or new rail elements and end treatments. See Standard Plan G-11.
8. Install flexible delineators on guardrail posts when called for in the contract. See Standard Plan G-00 for guardrail flexible delineator details.

## DESIGN NOTES:

1. No fixed objects allowed within 36" of the back side of guardrail post.
2. This barrier is acceptable under MASH tests 3-10 and 3-11.

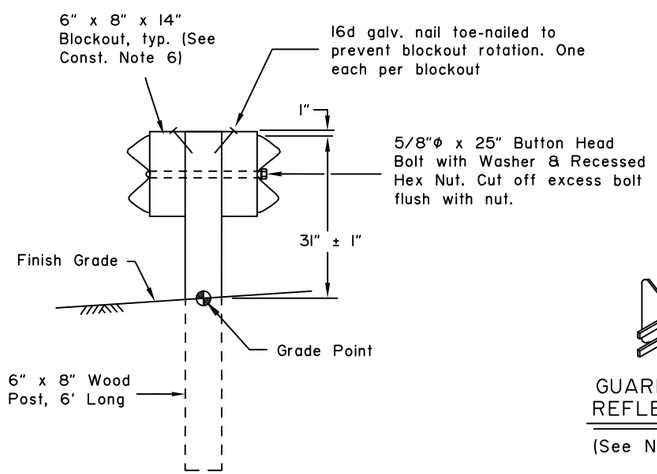


TYPE IV DOUBLE SIDED INSTALLATION

GUARDRAIL REFLECTOR

(See Note 5)

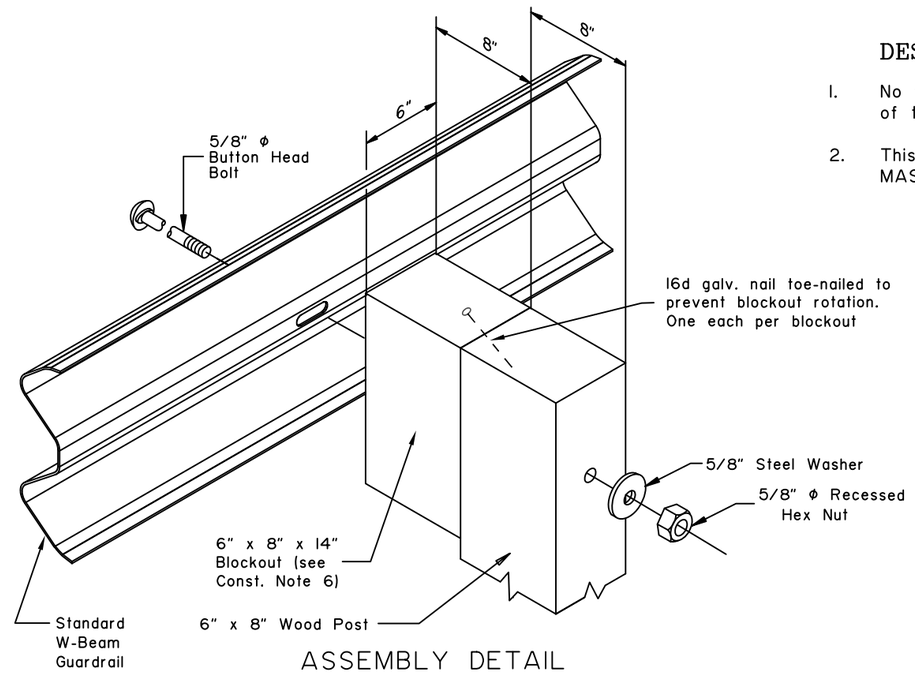


ASSEMBLY DETAIL

(Type I post shown)

State of Alaska DOT&PF
ALASKA STANDARD PLAN

**STEEL POST W3 GUARDRAIL**

Adopted as an Alaska Standard Plan by: Carolyn Morehouse

Carolyn Morehouse, P.E.
Chief Engineer

Adoption Date: 5/15/2019

Last Code and Stds. Review
By: LRG Date: 5/15/2019

Next Code and Standards Review date: 5/15/2029

G-05.11W

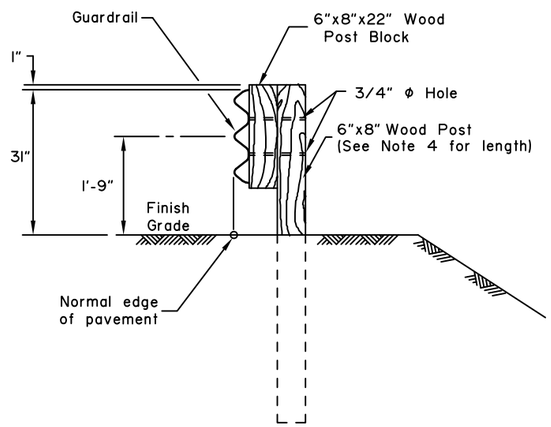


TYPE I POST INSTALLATION

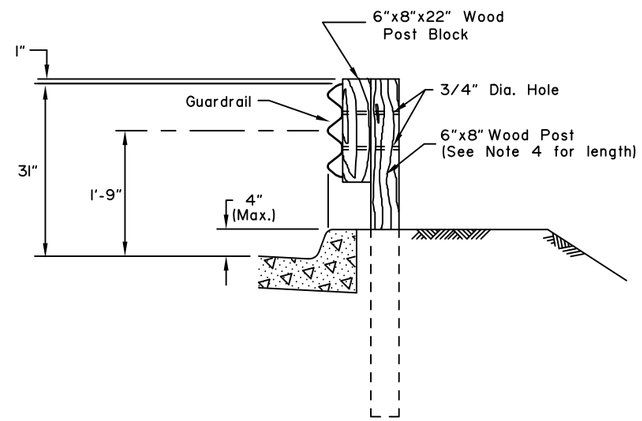


CURB DETAIL

TYPE III POST INSTALLATION

NOTE: Curb should not be installed with guardrail when the speed limit exceeds 40 mph.

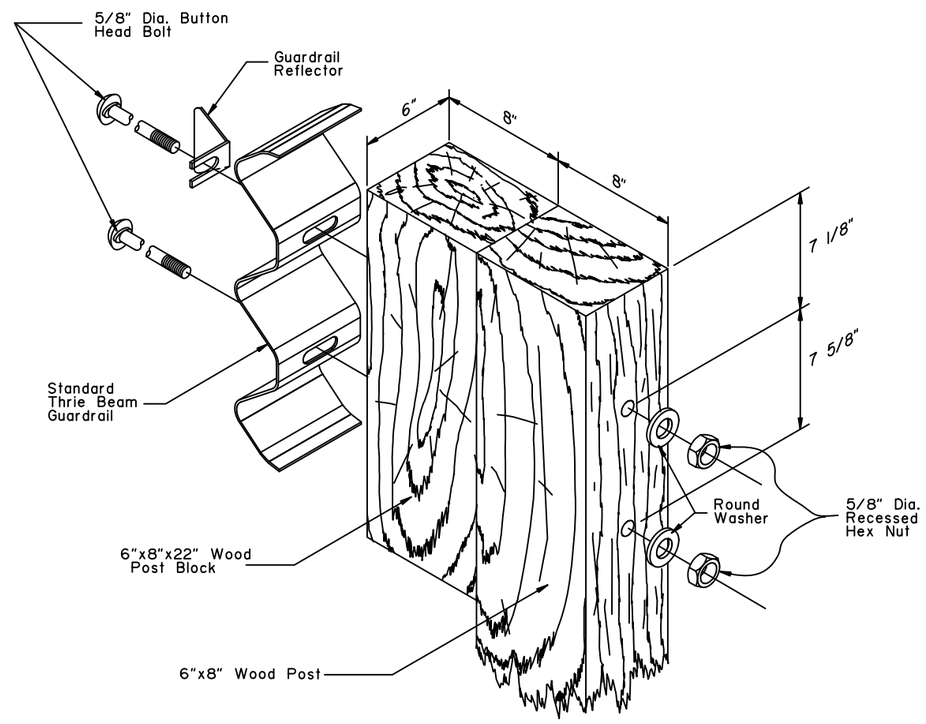


ASSEMBLY DETAIL

## GENERAL NOTES:

1. Guardrail Reflectors shall be mounted at 50' centers and placed in the upper indentation of the rail panel beginning with the first guardrail post. Type A Reflectors shall be used unless specified otherwise on the plans.
2. All covered hardware shall comply with the AASHTO/AGC/ARTBA "A Guide to Standardized Highway Barrier Hardware", latest edition.
3. See standard drawings G-00, "Standard Guardrail Hardware" for hardware details.
4. See standard drawing G-10, "Beam Guardrail Post Installation" for post lengths corresponding to different combinations of slope and behind-post embankment width.
5. Typical post spacing is 6'-3" center to center.
6. This barrier is acceptable under NCHRP 350, TL3.

State of Alaska DOT&PF
ALASKA STANDARD PLAN

**WOOD POST THRIE-BEAM GUARDRAIL**

Adopted as an Alaska Standard Plan by: Kenneth J. Fisher, P.E.
Chief Engineer

Adoption Date: 02/08/2019

Last Code and Stds. Review
By: Date:

Next Code and Standards Review date: 02/08/2029

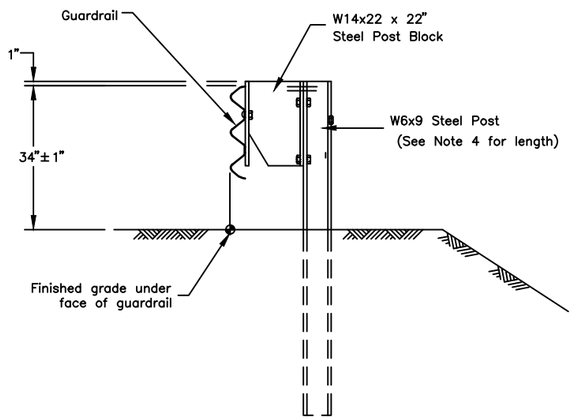


TYPE I POST INSTALLATION

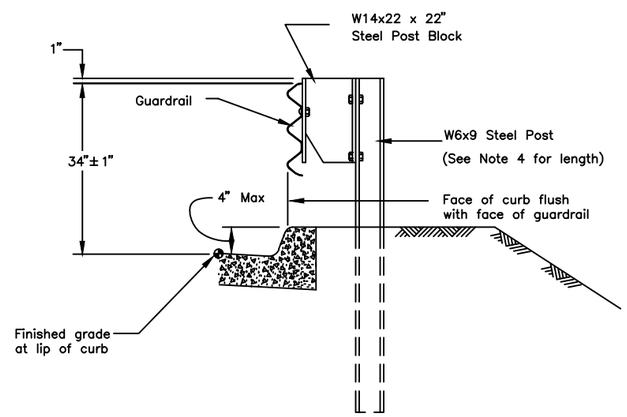


CURB DETAIL

TYPE III POST INSTALLATION

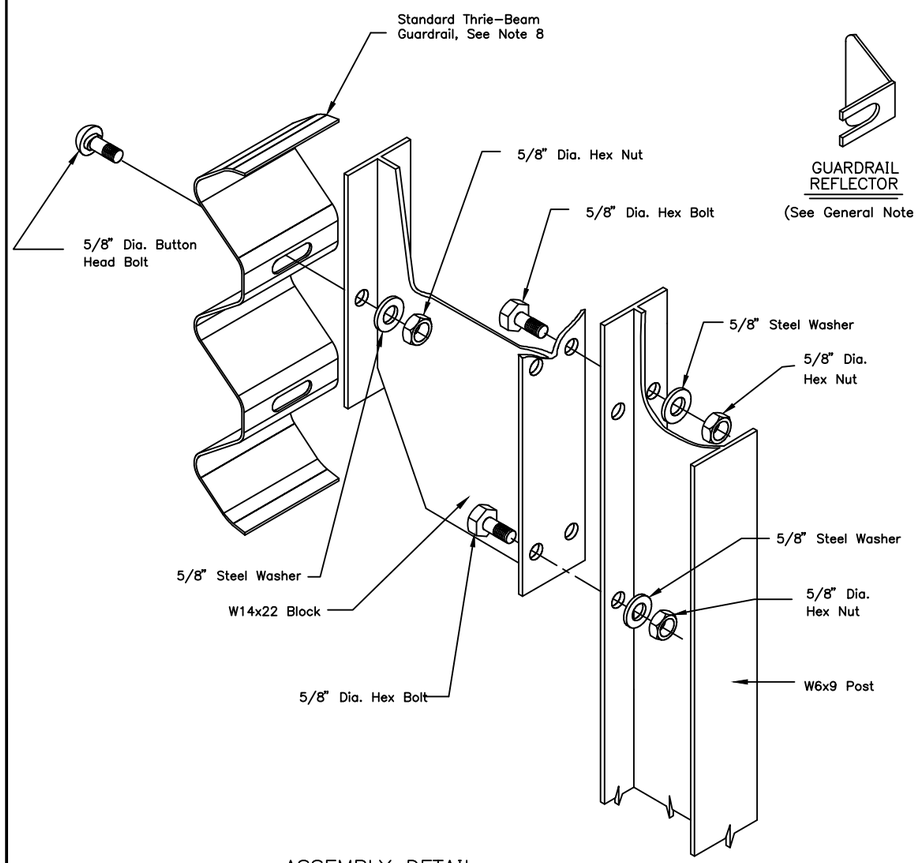


ASSEMBLY DETAIL



GUARDRAIL
REFLECTOR
(See General Note 1)

## GENERAL NOTES:

1. Attach guardrail reflector to rail panel using a 5/8" button head bolt with 5/8" recessed head hex nut and steel washer in a mid–span bolt slot in the upper indentation of the rail panel. Begin 37–1/2" from the first applicable guardrail post. Install reflectors every 25' on tangents and every 12.5' on curves starting 100' before the P.C. and ending 100' after the P.T. Type A reflectors shall be used unless specified otherwise on the plans.
2. All covered hardware shall comply with the Task Force 13 (TF 13) Guide to Standardized Roadside Safety Hardware online publication.
3. See Standard Plan G–00, "Standard Guardrail Hardware" for hardware details.
4. See Standard Plan G–10, "Beam Guardrail Post Installation" for post lengths corresponding to different combinations of slope and behind–post embankment width.
5. Mount rail to block with a bolt on the approaching–traffic side of block web.
6. Typical post spacing is 6'–3" center to center.
7. This barrier is acceptable under NCHRP 350, TL3 and TL4.
8. Furnish RTM04a–04b thrie–beam rail panels.

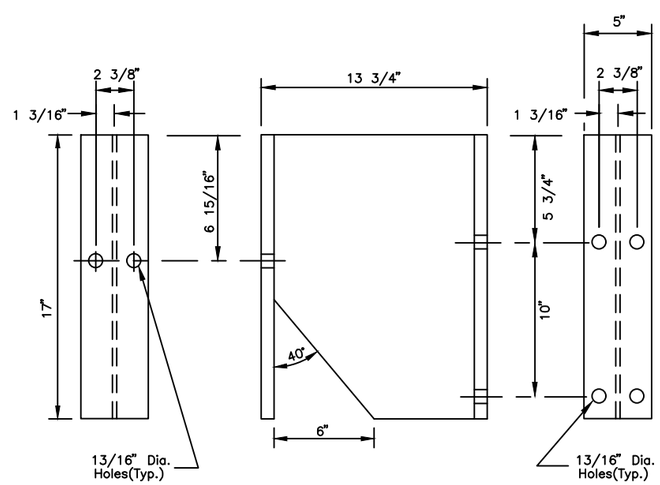


W14x22
POST BLOCK

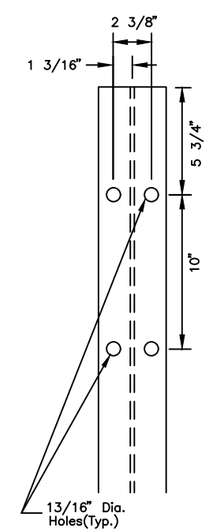


W6x9
STEEL POST

State of Alaska DOT&PF
ALASKA STANDARD PLAN

STEEL POST MODIFIED
THRIE-BEAM
GUARDRAIL

Adopted as an Alaska Standard Plan by: Carolyn Morehouse
Carolyn Morehouse, P.E.
Chief Engineer

Adoption Date: 7/17/2020

Last Code and Stds. Review
By: KLK Date: 7/8/2020

Next Code and Standards Review Date: 7/8/2030

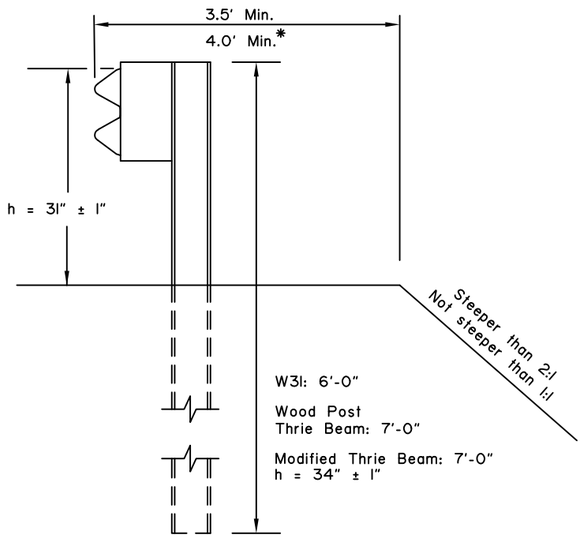


* with Modified Thrie Beam

CASE 1

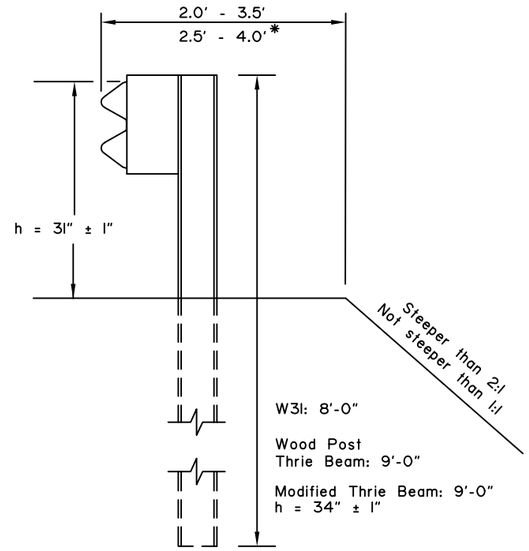


* with Modified Thrie Beam

CASE 2

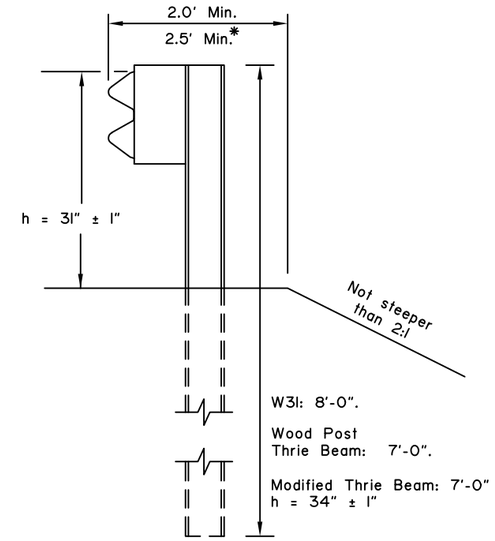


CASE 3

## CONSTRUCTION NOTES:

1. This drawings is to be used for post length determination only. See Plans for slopes and behind-post embankment widths.
2. To determine post length, identify the case that matches site conditions and read the length corresponding to the pertinent guardrail type.
3. These dimensions apply to both curbed and uncurbed section.
4. Case 1, 2 and 3 are shown with steel posts. Wood posts may be substituted when allowed by specifications. Wood Post Thrie Beam installations must use wood posts only.
5. Case 4 and 5 apply to W31 guardrail only.

## DESIGN NOTES:

1. No fixed objects allowed within 36" of the back of post for Cases 1, 2 & 3.
2. No fixed objects allowed within 48" of the back of post for Cases 4 & 5.

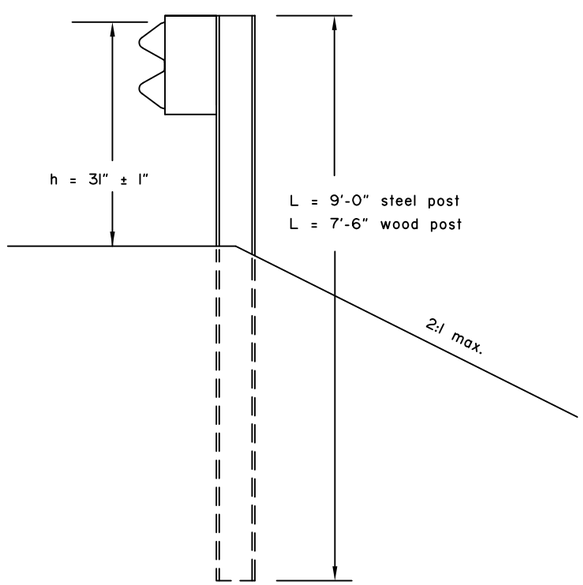


CASE 4

(See Note 5)

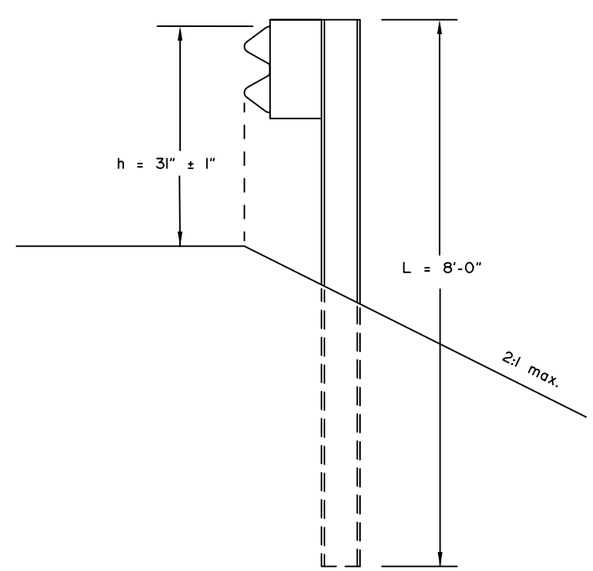


CASE 5

(See Note 5)

State of Alaska DOT&PF
ALASKA STANDARD PLAN

**GUARDRAIL POST INSTALLATION**

Adopted as an Alaska Standard Plan by: Kenneth J. Fisher, P.E.
Chief Engineer

Adoption Date: 02/08/2019

Last Code and Stds. Review
By: Date:

Next Code and Standards Review date: 02/08/2029

## GENERAL NOTES:

1. This drawing illustrates steel post W31 guardrail. Wood posts may be used where noted as applicable to the project.

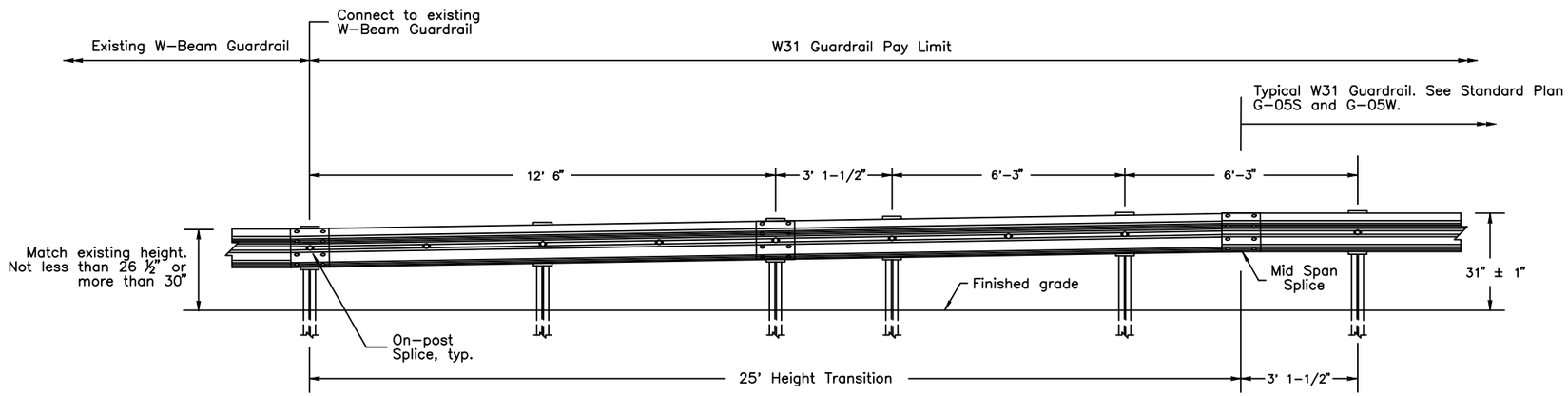


W31 TO W-BEAM TRANSITION

State of Alaska DOT&PF
ALASKA STANDARD PLAN

W31 GUARDRAIL
TRANSITION DETAILS

Adopted as an Alaska Standard Plan by: Carolyn Morehouse

Carolyn Morehouse, P.E.
Chief Engineer

Adoption Date: 7/17/2020

Last Code and Stds. Review
By: KLK Date: 7/8/2020

Next Code and Standards Review Date: 7/8/2030

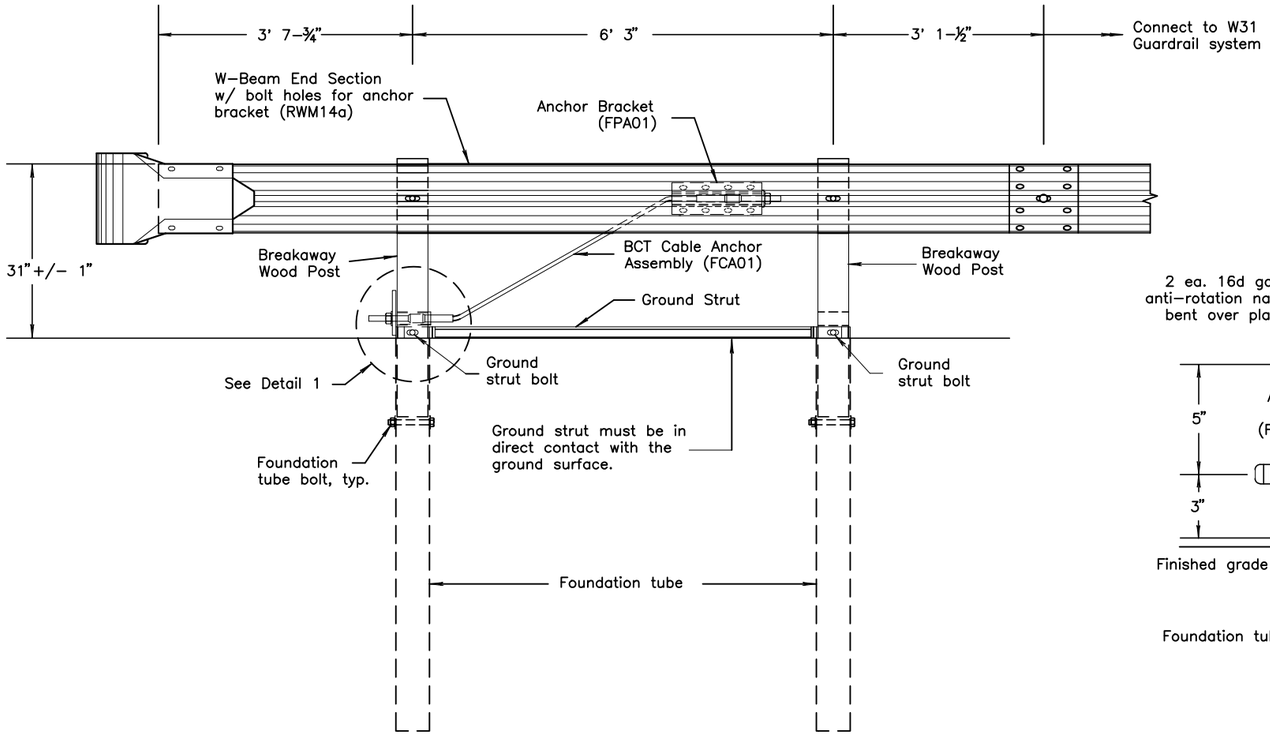


ELEVATION

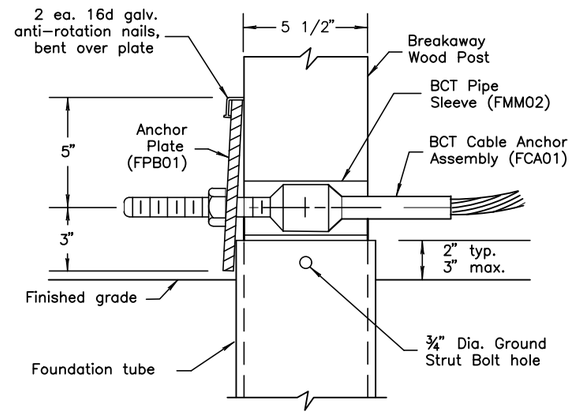


DETAIL 1

(Ground strut not shown for clarity)

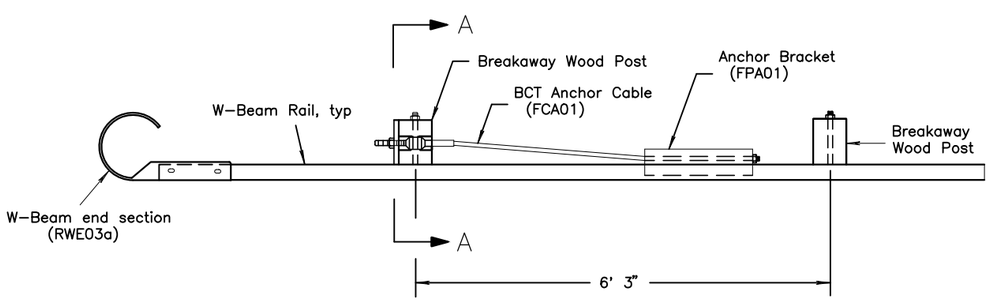


PLAN VIEW

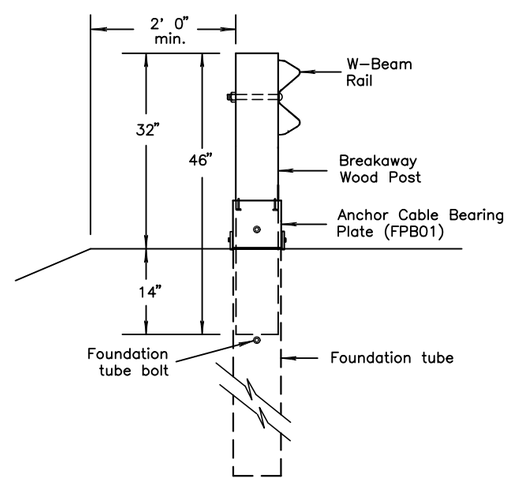


SECTION A-A

## CONSTRUCTION NOTES

1. All covered hardware must comply with Task Force 13 (TF13) Guide to Standardized Roadside Safety Hardware online publication. Designators are given in parenthesis, when possible.
2. End section bolts and nuts have the same material requirements as splice bolts.
3. Foundation tube bolts are are 7/8" diameter ASTM A307 hex head. Foundation tube bolts require an ASTM A563 A nut and two ASTM F844 7/8" diameter flat washers. Install one washer under bolt head and one under nut.
4. Anchor bracket and strut bolts are are 5/8" diameter ASTM A307 hex head. Foundation tube bolts require ASTM A563 A nut and two ASTM F844 7/8" diameter flat washers. Install one washer under bolt head and one under nut.

State of Alaska DOT&PF
ALASKA STANDARD PLAN

W31 DOWNSTREAM END ANCHOR

Adopted as an Alaska Standard Plan by: Carolyn Morehouse
Carolyn Morehouse, P.E.
Chief Engineer

Adoption Date: 7/17/2020

Last Code and Stds. Review
By: KLK Date: 7/8/2020

Next Code and Standards Review Date: 7/8/2030

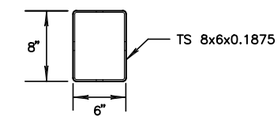


PLAN VIEW

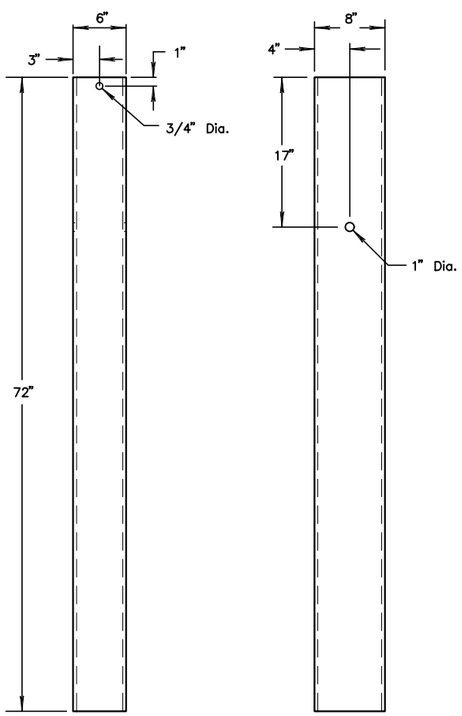


FRONT VIEW SIDE VIEW

FOUNDATION TUBE

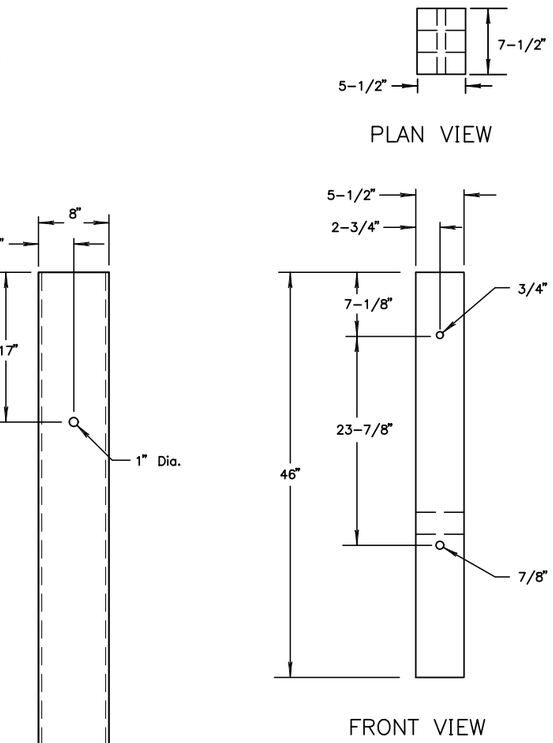


PLAN VIEW

FRONT VIEW SIDE VIEW

BREAKAWAY WOOD POST

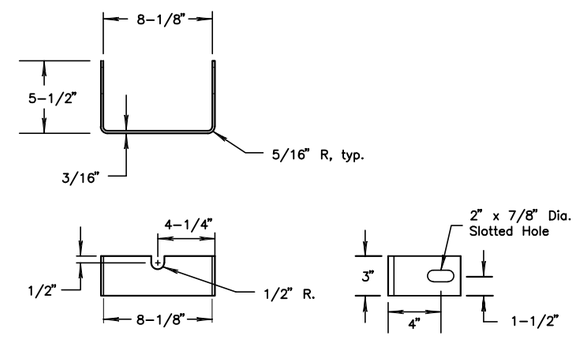


YOKE DETAIL

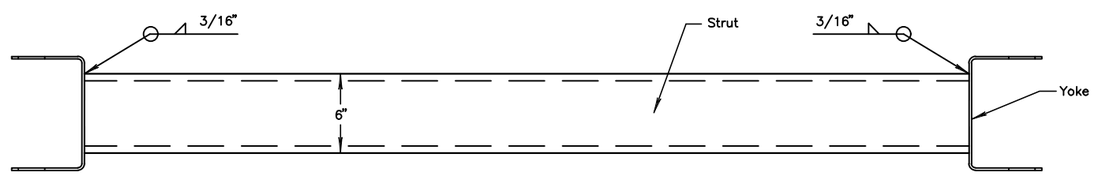


PLAN VIEW

GROUND STRUT SECTION

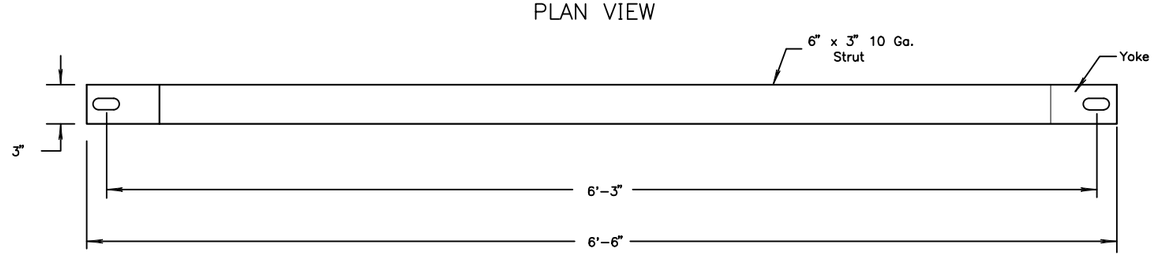


FRONT VIEW

GROUND STRUT DETAIL

## CONSTRUCTION NOTES

1. All covered hardware must comply with Task Force 13 (TF13) Guide to Standardized Roadside Safety Hardware online publication. Designators are given in parenthesis, when possible.

State of Alaska DOT&PF
ALASKA STANDARD PLAN

W31 DOWNSTREAM
END ANCHOR

Adopted as an Alaska Standard Plan by: Carolyn Morehouse
Carolyn Morehouse, P.E.
Chief Engineer

Adoption Date: 7/17/2020

Last Code and Stds. Review
By: KLK Date: 7/8/2020

Next Code and Standards Review Date: 7/8/2030

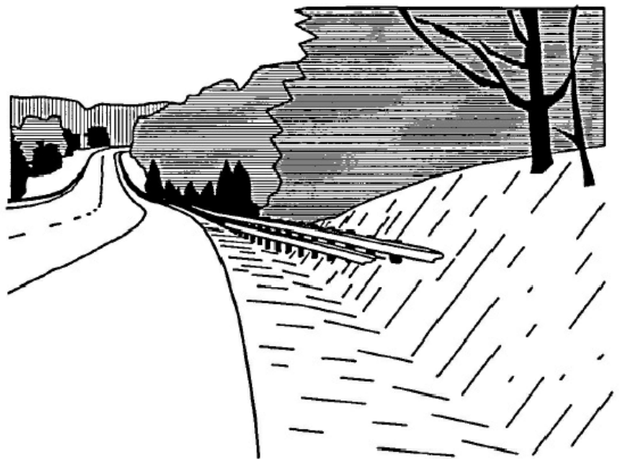

PERSPECTIVE VIEW

| LATERAL OFFSET TABLE | |
|---|---|
| Post No. | Offset* |
| A | 14' 3" |
| D | 11' 2-1/4" |
| E | 9' 1-1/2" |
| F | 6' 0-1/4" |
| I | 3 -1/4" |

* Lateral offset is measured from the shoulder hinge point line to the back of guardrail. These offsets apply only for the foreslope and backslope conditions shown on the Sections on Sheet 2. For other foreslope or backslope conditions, these offsets need to be recomputed.

| FLARE RATE TABLE | |
|---|---|
| Posts | Flare Rate |
| A - D | 4 : 1 |
| D - E | 6 : 1 |
| E - F | 8 : 1 |
| F - I | 13 : 1 |
| I - J | 13:1 or flatter |

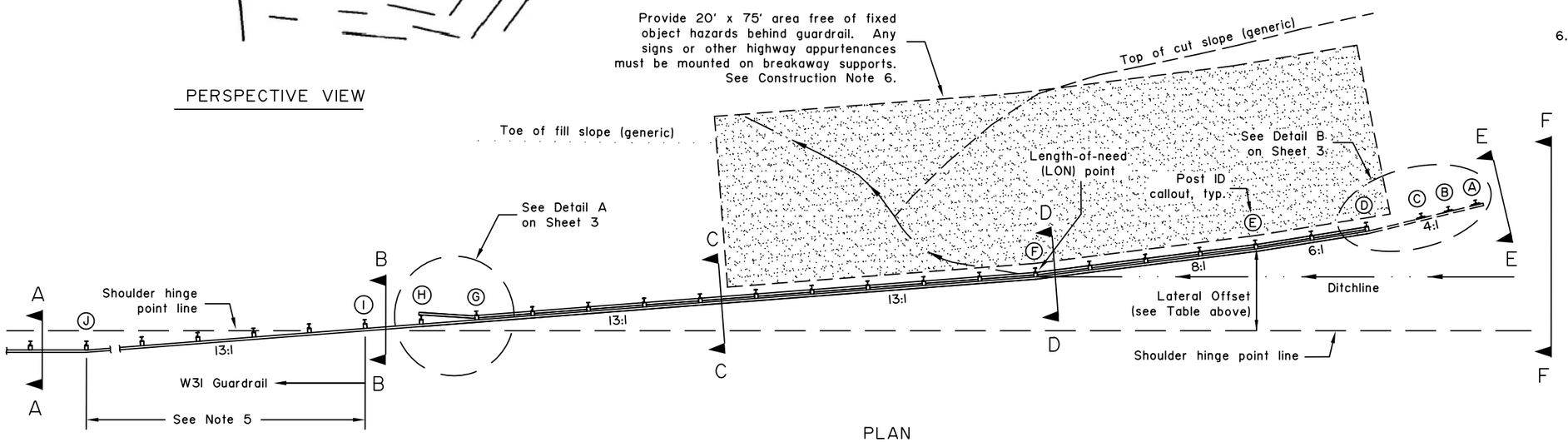


PLAN

All sections in this plan view are shown on Sheet 2

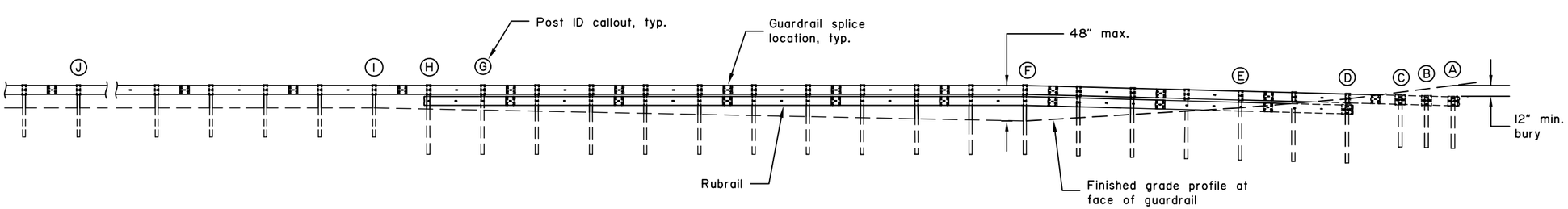


ELEVATION

## CONSTRUCTION NOTES:

1. W-beam, blockout, and post details not shown here shall conform to Std Dwg G-05S.
2. All covered hardware shall comply with the Task Force 13 (TF13) Guide to Standardized Roadside Safety Hardware online publication.
3. This terminal is MASH TL-3 tested.
4. Pay limits for Buired-in-Backslope Terminal are from Post A to Post I. Payment for Buried-in-Backslope Terminal includes excavation and backfill work associated with burial from Post A to Post I.
5. Extend the W31 guardrail at a 13:1, or flatter, flare rate from Post I to Post J, where the typicial guardrail run is parallel to the shoulder. Field bend w-beam rail element to transition from the 13:1 flare to parallel to the shoulder at Post J.
6. Provide a 20' x 75' object free area when backslopes are flatter than 2:1. When required, this work is subsidiary to the Buried-in-Backslope Terminal.

## DESIGN NOTES:

1. The LON point shown on this sheet is for the conditions shown in the Sections on Sheet 2. For other foreslope conditions, especially those with wider foreslopes and deeper ditches, the LON point will be at a different location. In this case, the LON point is where the top of the rail height first reaches 48" with respect to the finished grade at the face of the guardrail

State of Alaska DOT&PF
ALASKA STANDARD PLAN

**W31 GUARDRAIL BURIED-IN-BACKSLOPE TERMINAL**

Adopted as an Alaska Standard Plan by: Kenneth J. Fisher, P.E.
Chief Engineer

Adoption Date: 02/08/2019

Last Code and Stds. Review
By: Date:

Next Code and Standards Review date: 02/08/2029

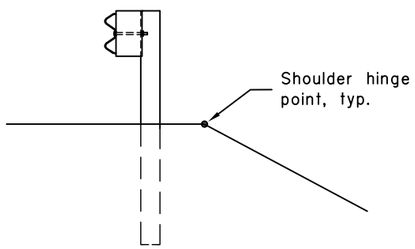


SECTION A-A

Typical Section of Guardrail Installation at shoulder

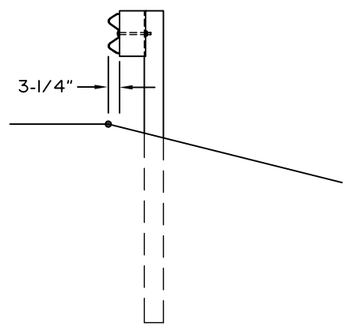


SECTION B-B

Typical Section at Post 1. Face of Guardrail flush with shoulder hinge point.

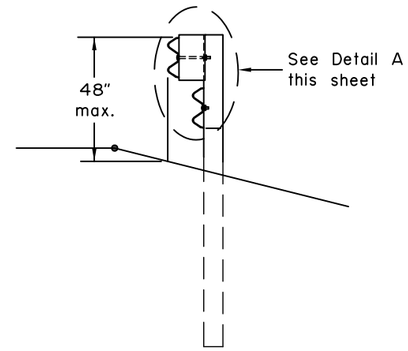


SECTION C-C

Guardrail on foreslope.

## GENERAL NOTES:

1. W-beam, blockout, and post details not shown here shall conform to Std Dwg G-05S.
2. All covered hardware shall comply with the Task Force 13 (TF13) Guide to Standardized Roadside Safety Hardware online publication.
3. Foreslopes shall be 4:1 or flatter. Backslopes may be 1:1 maximum to 3:1 minimum. Lateral offsets shown on this sheet and Sheet 1 are based on the 4:1 foreslope, 2:1 backslope, and 18" ditch depth shown on this sheet. Other ditch depth, foreslope, or backslope conditions will require recomputation of lateral offsets and special grading of the top of guardrail to maintain the 48" maximum ground clearance to the top of guardrail and 12" minimum bury at Post A.

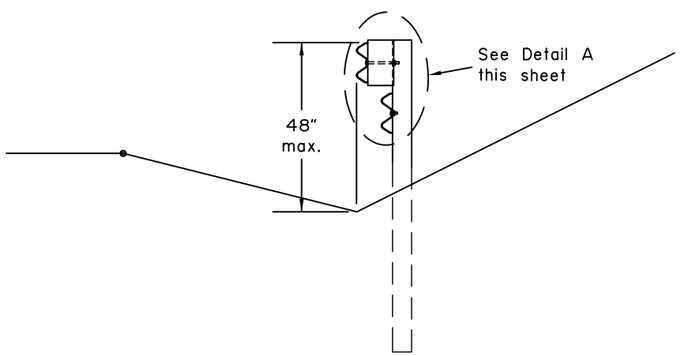


SECTION D-D

Section at Post F. Face of Guardrail aligned with center of ditch.

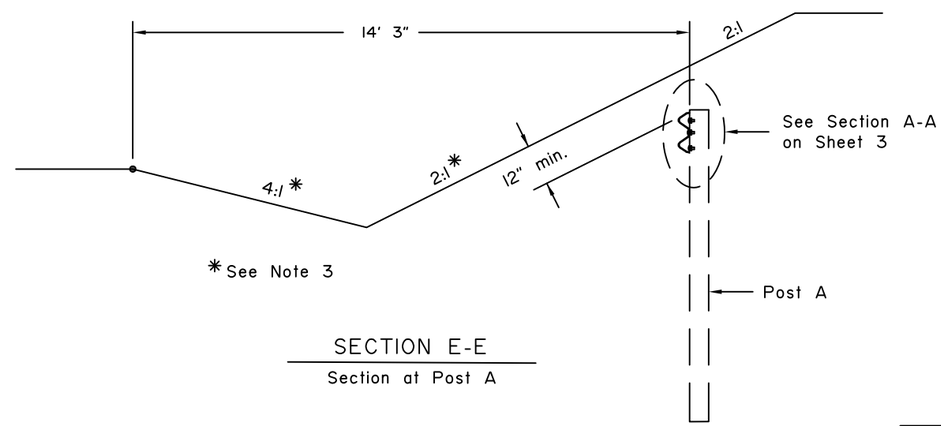


*See Note 3

SECTION E-E

Section at Post A

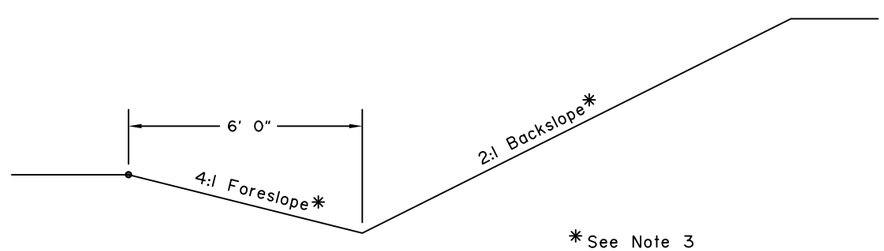


*See Note 3

SECTION F-F

Typical Ditch Section

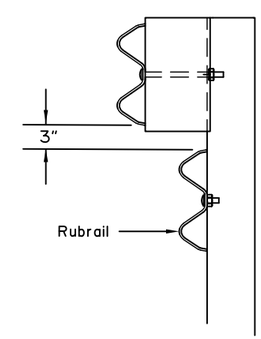


DETAIL A

State of Alaska DOT&PF
ALASKA STANDARD PLAN

**W31 GUARDRAIL BURIED-IN-BACKSLOPE TERMINAL**

Adopted as an Alaska Standard Plan by: Kenneth J. Fisher, P.E. Chief Engineer

Adoption Date: 02/08/2019

Last Code and Stds. Review
By: Date:

Next Code and Standards Review date: 02/08/2029

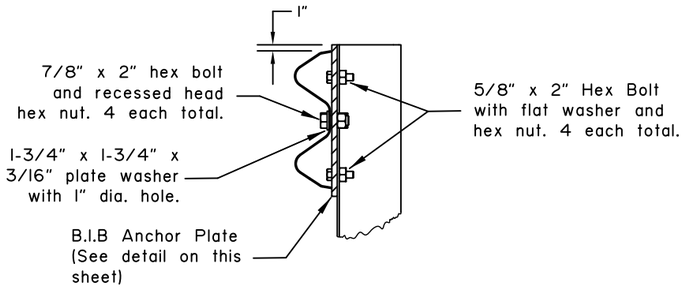


SECTION A-A

Typical for Posts A-C

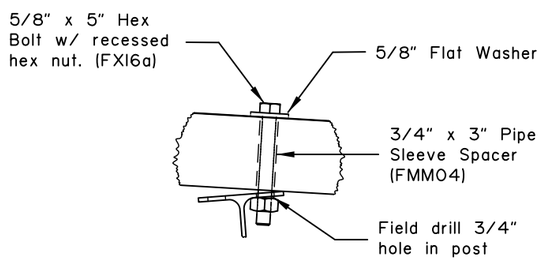


DETAIL C

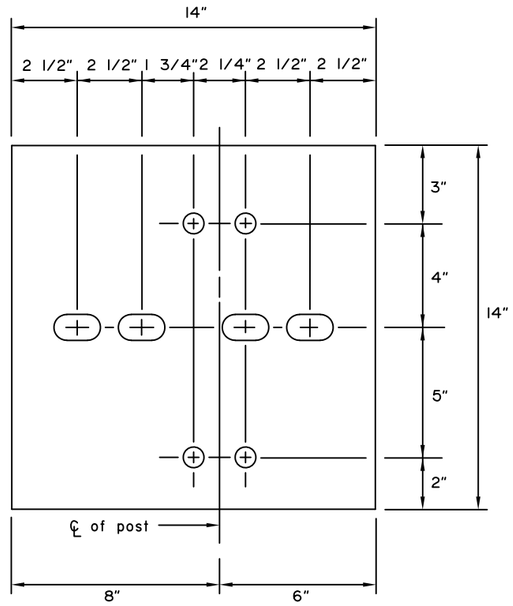


B.I.B. ANCHOR PLATE

Plate Notes:
1. Plate is 1/2" galvanized ASTM A36 steel
2. All circular holes are 3/4" diameter
3. All slotted holes are 1" x 1-3/4"

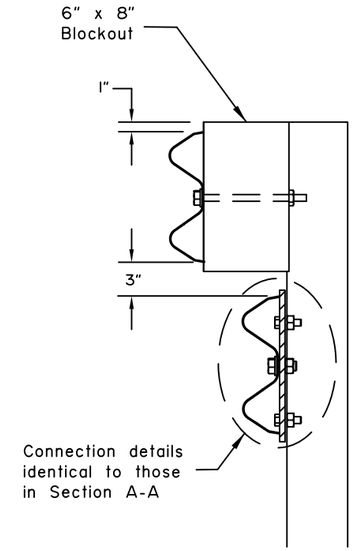


SECTION B-B

Post D only

## GENERAL NOTES:

1. W-beam, blockout, and post details not shown here shall conform to Std Dwg G-05S.
2. All covered hardware shall comply with the Task Force 13 (TF13) Guide to Standardized Roadside Safety Hardware online publication.
3. Field drill 1" diameter holes in w-beam rail elements to make connections to the B.I.B. Anchor Plate.

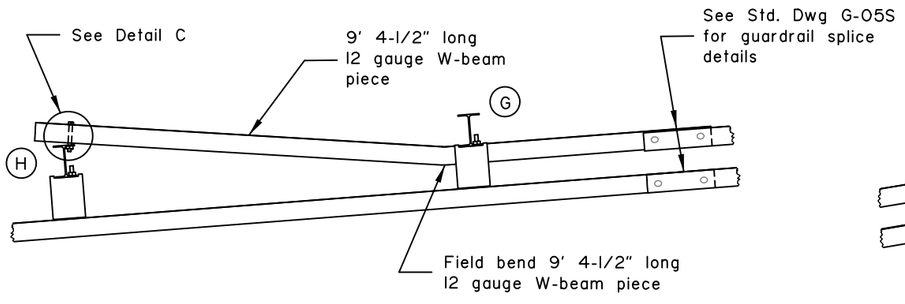


DETAIL A

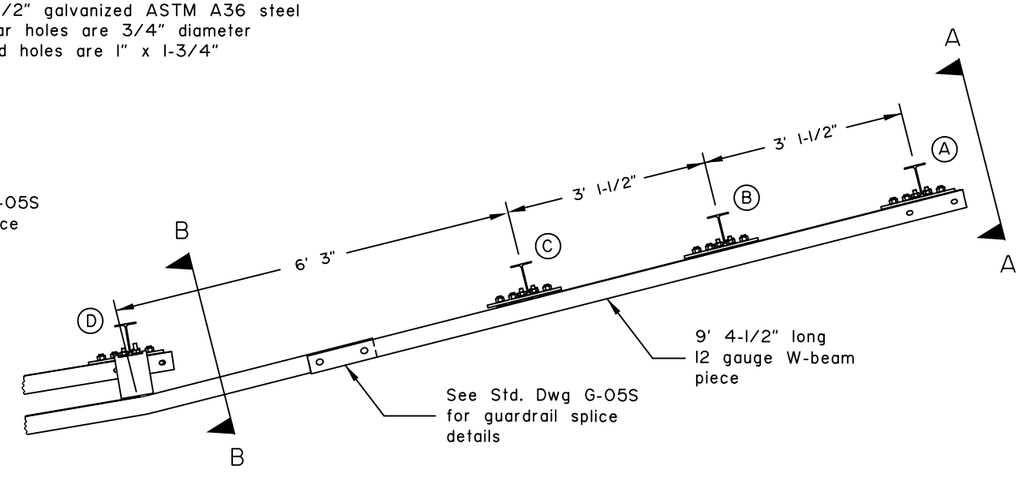


DETAIL B

State of Alaska DOT&PF
ALASKA STANDARD PLAN

**W31 GUARDRAIL BURIED-IN-BACKSLOPE TERMINAL**

Adopted as an Alaska Standard Plan by: Kenneth J. Fisher, P.E.
Chief Engineer

Adoption Date: 02/08/2019

Last Code and Stds. Review
By: Date:

Next Code and Standards Review date: 02/08/2029

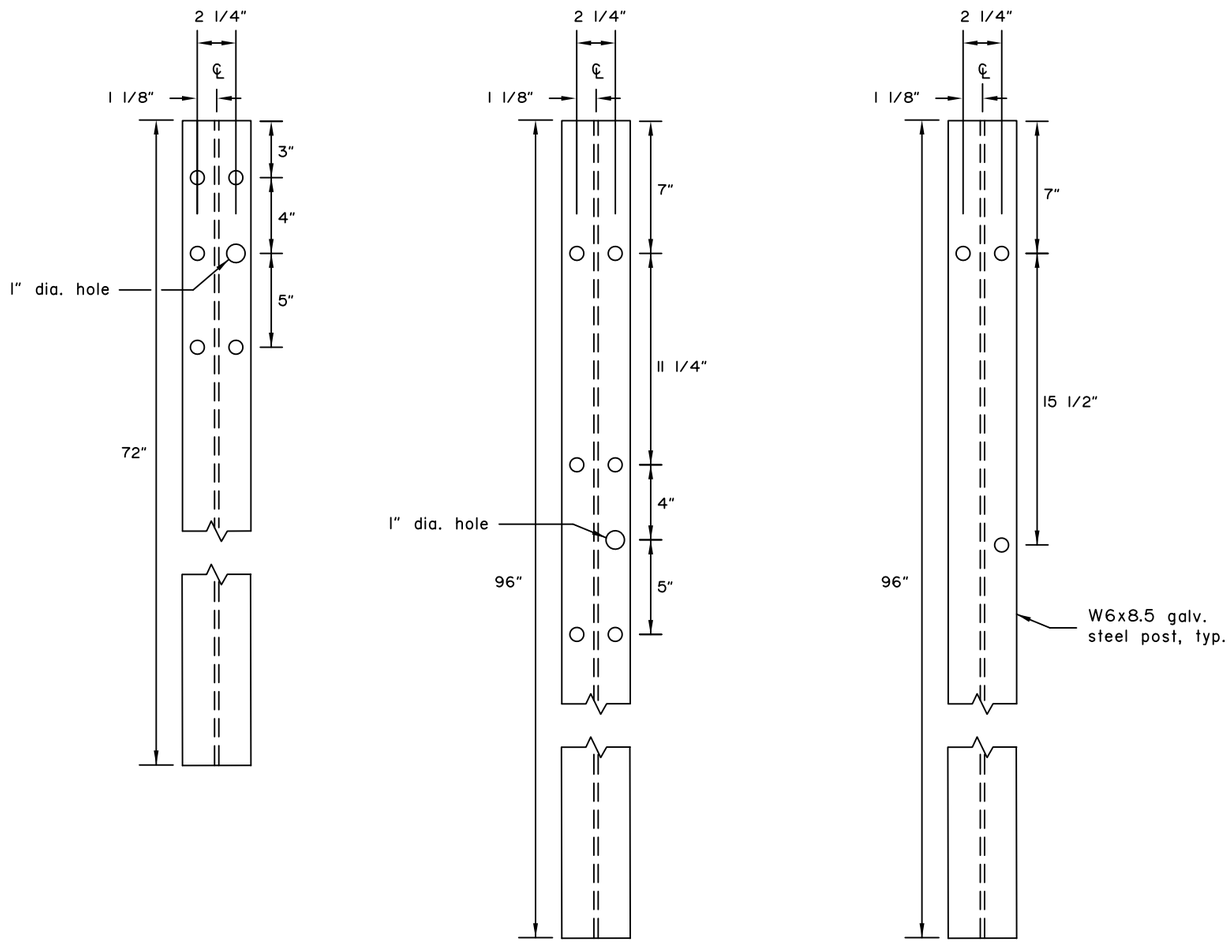


## GENERAL NOTES:

1. W-beam, blockout, and post details not shown here shall conform to Std Dwg G-05S.
2. All covered hardware shall comply with the Task Force 13 (TF13) Guide to Standardized Roadside Safety Hardware online publication.
3. All post holes are 3/4" diameter, except those shown as 1" diameter.

State of Alaska DOT&PF
ALASKA STANDARD PLAN

**W31 GUARDRAIL BURIED-IN-BACKSLOPE TERMINAL**

Adopted as an Alaska Standard Plan by: Kenneth J. Fisher, P.E.
Chief Engineer

Adoption Date: 02/08/2019

Last Code and Stds. Review
By: Date:

Next Code and Standards Review date: 02/08/2029

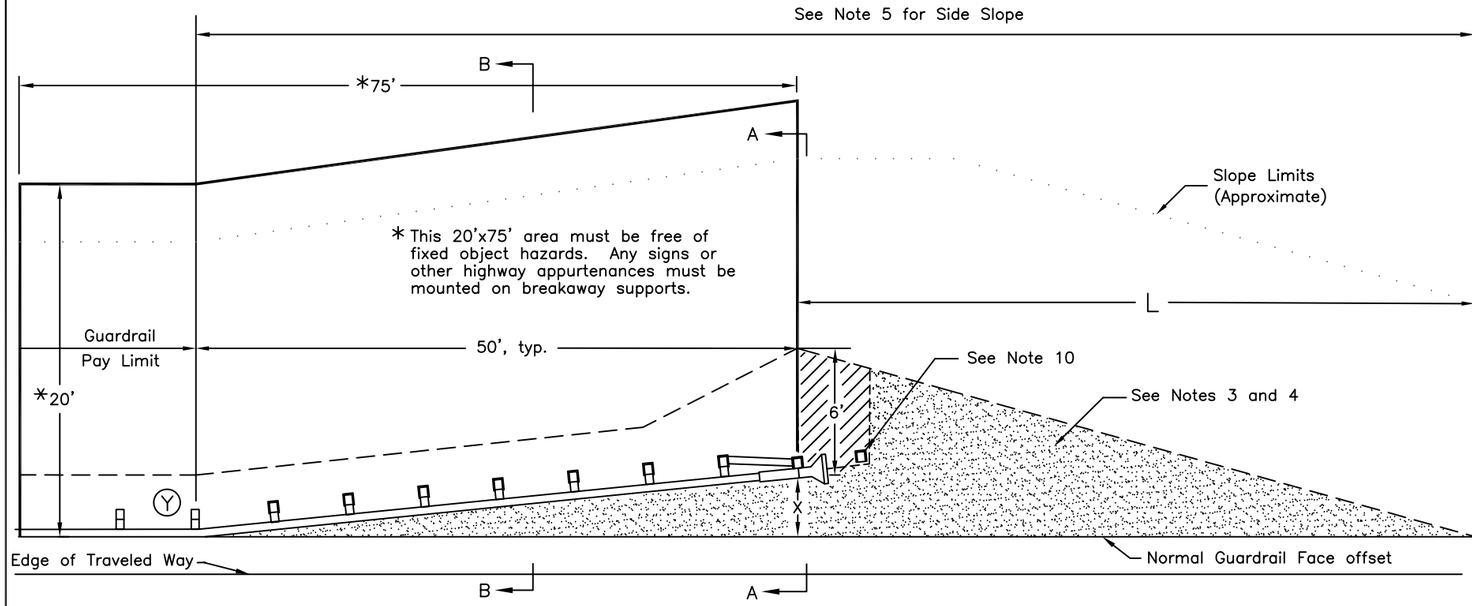


STANDARD GUARDRAIL TERMINAL WIDENING DETAIL

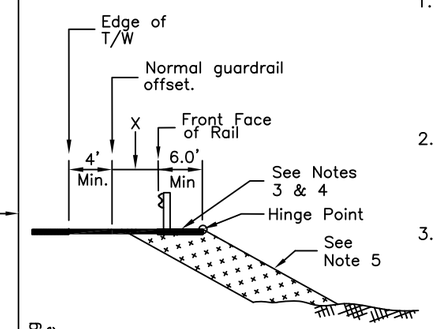


SECTION A–A

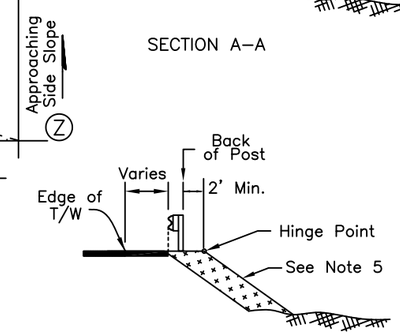


SECTION B–B
(Applies to both details)

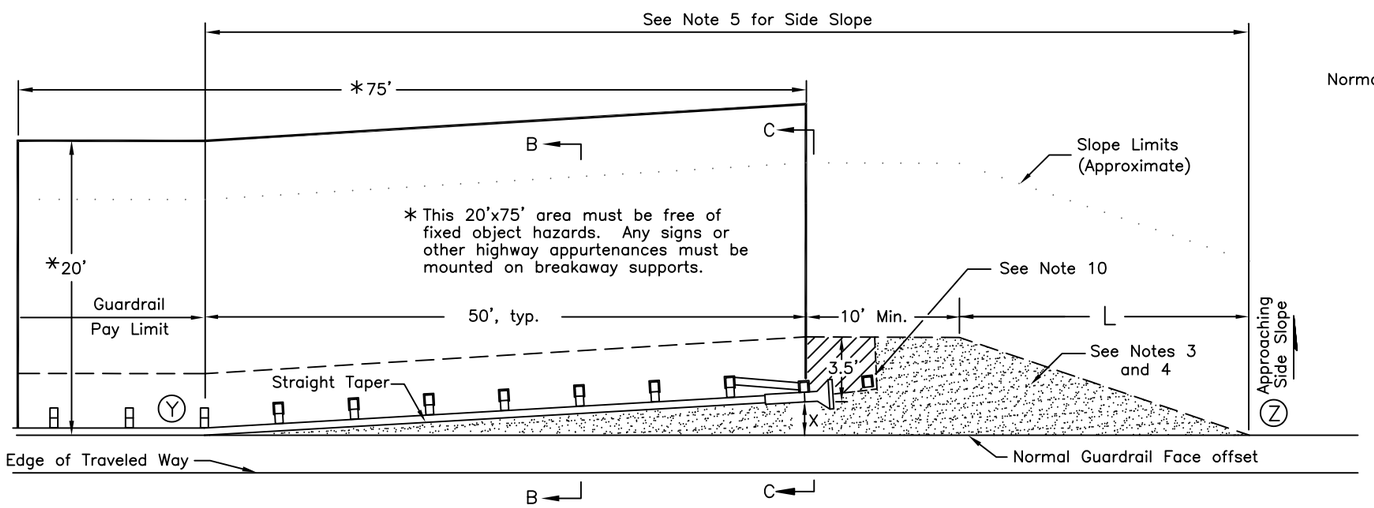


ALTERNATE GUARDRAIL TERMINAL WIDENING DETAIL

(USE ONLY WHEN LIMITED RIGHT–OF–WAY OR LIMITING SITE CONDITIONS MAKE THE STANDARD DETAIL INFEASIBLE)

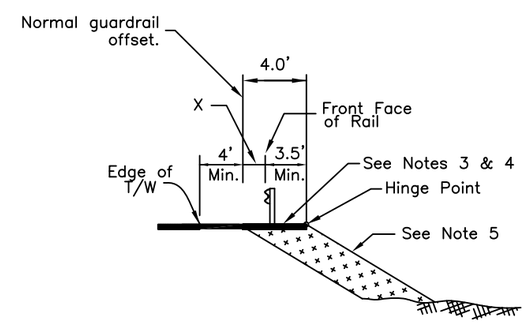


SECTION C–C

X= End offset. See manufacturer's information for the range of acceptable end offsets for each MASH compliant terminal.

| Taper Lengths (L) for Common End Offsets (X) | | |
|---|---|---|
| End Offset | Standard Detail | Alternate Detail |
| 0' | 24.0' | 13.0' |
| 1' | 26.0' | 17.0' |
| 1.5' | 28.0' | 19.0' |
| 2' | 30.0' | 21.0' |
| 2.5' | 32.0' | 22.0' |
| 4' | 37.0' | 28.0' |
| Interpolate if the end offset falls between table values | | |

## GENERAL NOTES

1. This Std. Dwg. applies to all MASH approved guardrail end terminals (GETs). The alternate detail may only be used with parallel or tangent GETs. The terminal details shown are for illustration only – see manufacturer's drawings for actual post, rail, strut, etc. configuration and layout.
2. Use this Std. Widening Detail for all GETs except when limited right–of–way or limiting site conditions make the use of the Std. Widening Detail infeasible. In that case, the alternate detail is permissable.
3. Construct the shaded areas to match the slope of the adjacent shoulder. The slope may be increased to 10:1 if identified in the plans or when approved by the engineer. Match the slope when the shoulder slopes toward the road as well as away from the road.
4. On paved roads, the shaded areas shall be paved. On gravel roads, surface the shaded areas with the same materials used to surface the travel lanes.
5. From point Ⓨ to point Ⓩ make the side slope match the approaching side slope except where it is flatter than 4:1. In that case, the slope may be steepened to 4:1.
6. Attach a flexible marker at the beginning of each GET.
7. The max. allowable height for foundation tubes or other steel components of terminal post breakaway systems is 4" above the surrounding grade.
8. The details on this sheet do not apply to W31 Downstream End Anchors (Std Dwg G–14).
9. The details on this sheet apply to GETs on both the approach and downstream ends on two–way undivided roads and to any downstream MASH compliant GETs.
10. Some MASH GET systems have an additional post/anchor at the approximate location shown. If this post/anchor is present do not pave the diagonally hatched area. If not present, pave the diagonally hatched area also.

State of Alaska DOT&PF
ALASKA STANDARD PLAN

**WIDENING FOR GUARDRAIL END TERMINALS**

Adopted as an Alaska Standard Plan by: Kenneth J. Fisher, P.E.
Chief Engineer

Adoption Date: 02/08/2019

Last Code and Stds. Review
By: Date:

Next Code and Standards Review date:02/08/2029

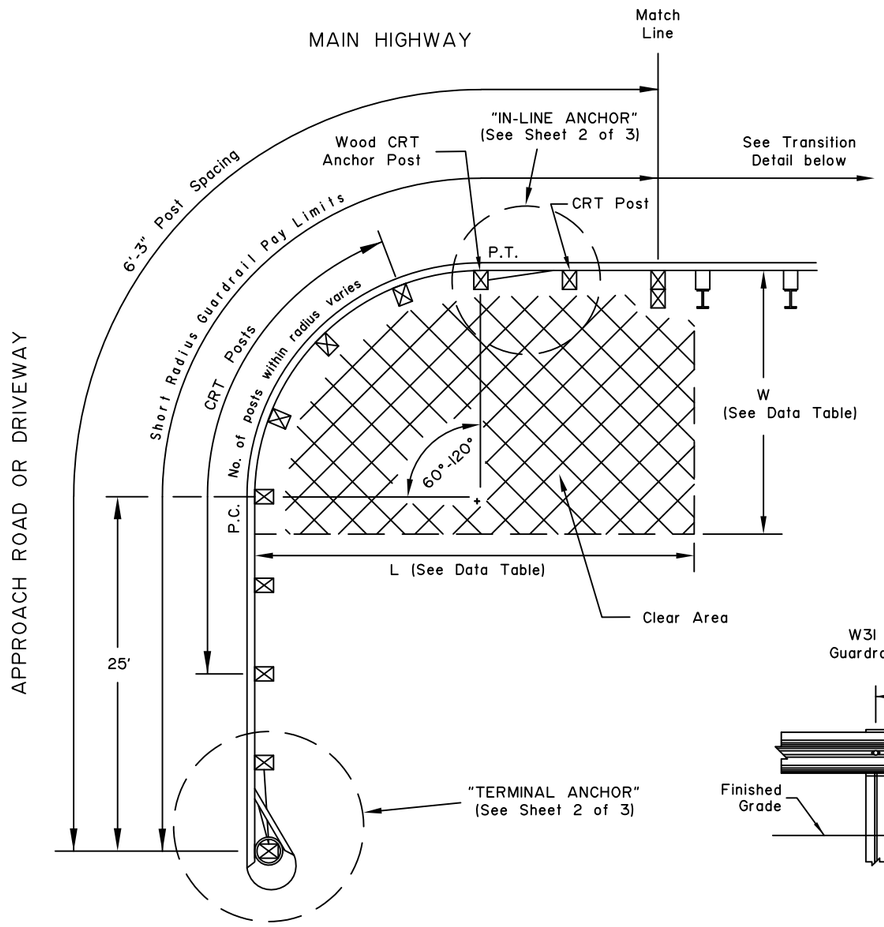


SHORT RADIUS GUARDRAIL PLAN

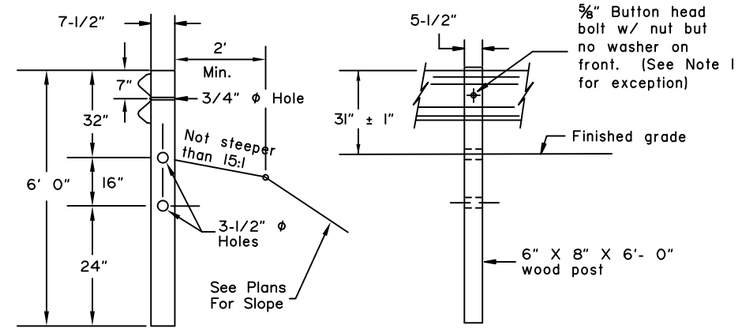


CONTROLLED RELEASE TERMINAL (CRT) POST

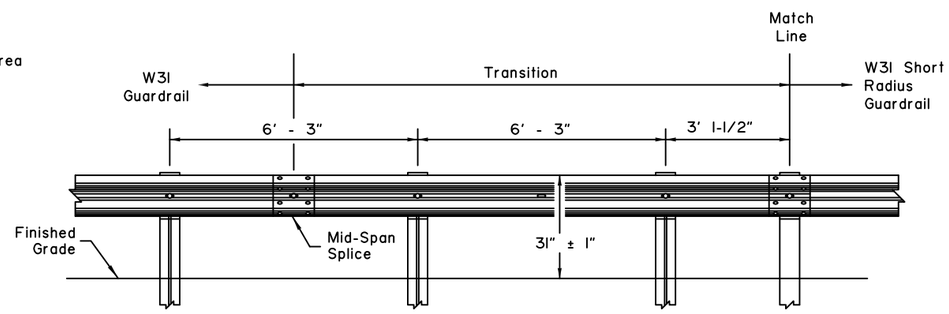


TRANSITION TO W31 GUARDRAIL - TYPE I

(As viewed from Main Highway)
(See Construction Note 2)

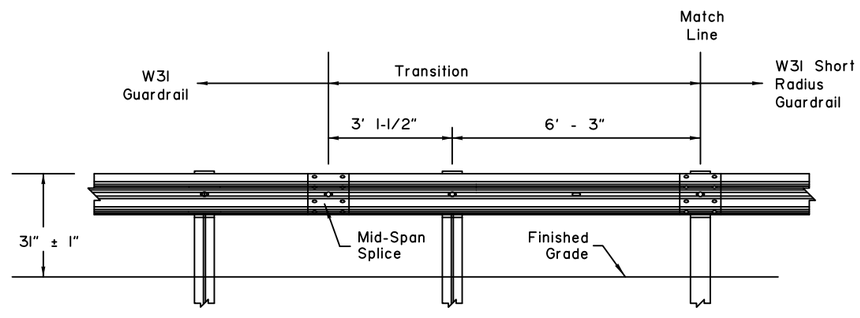


TRANSITION TO W31 GUARDRAIL TYPE II

(As viewed from Main Highway)
(See Construction Note 2)

| DATA TABLE * | | | | | |
|---|---|---|---|---|---|
| Curve Radius, Ft. (Rounded) | Curve Length | Number of Rail Sections | Clear Area | | ** No. of Posts |
| | | | Length (L) | Width (W) | |
| 8' | 12.50' | 1.0 | 25 | 15 | 5 |
| 12' | 18.75' | 1.5 | 25 | 15 | 6 |
| 16' | 25.00' | 2.0 | 30 | 15 | 7 |
| 20' | 31.25' | 2.5 | 33 | 15 | 8 |
| 24' | 37.50' | 3.0 | 37 | 20 | 9 |
| 28' | 43.75' | 3.5 | 40 | 20 | 10 |
| 32' | 50.00' | 4.0 | 45 | 20 | 11 |
| 36' | 56.25' | 4.5 | 50 | 20 | 12 |

* The table applies only to 90° approaches or driveways.
* 36 feet is the maximum allowable radius for this system.
** Number of CRT posts includes one for the In-Line Anchor.

## CONSTRUCTION NOTES:

1. Do not bolt rail to central post on 8' radius CRT.
2. Steel posts are shown in the transition. Wood post may be substituted when allowed by the Specifications.

## DESIGN NOTES:

1. Use the W31 short radius guardrail system to shield hazards at the intersection of a main highway with a minor road or driveway. Typical application include interruptions in guardrail runs caused by intersecting roadways
2. The short radius guardrail Terminal Anchor shown is for use on low speed (<45 mph) approach roads or driveways where motorists are required to stop or yield. Do not use this Terminal Anchor for high speed approach roads or driveways when a MASH approved end treatment is required.
3. The Clear Area shall be free of fixed object hazards. Any signs or other highway appurtenances in the clear area must be mounted on MASH compliant breakaway supports.
4. Connections to other guardrail systems (e.g. bridge rails and end treatments) and not provided on this drawing. Other details may be needed for this.
5. Short Radius Guardrail on 60 to 90 degree approaches are allowed provided they are constructed with posts at the P.C. and P.T. and the posts are placed on a uniform 6'-3" spacing.
6. When Short Radius Guardrail transitions to guardrail not at 31" ± 1" top-of-rail height, transition height over a 25 foot length.

State of Alaska DOT&PF
ALASKA STANDARD PLAN

**W31 SHORT RADIUS GUARDRAIL**

Adopted as an Alaska Standard Plan by: Kenneth J. Fisher, P.E.
Chief Engineer

Adoption Date: 02/08/2019

Last Code and Stds. Review
By: Date:

Next Code and Standards Review date: 02/08/2029

G-26.00

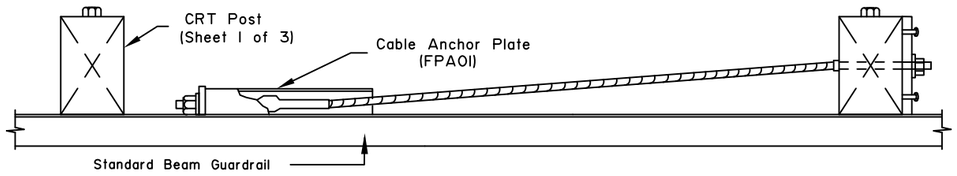


PLAN

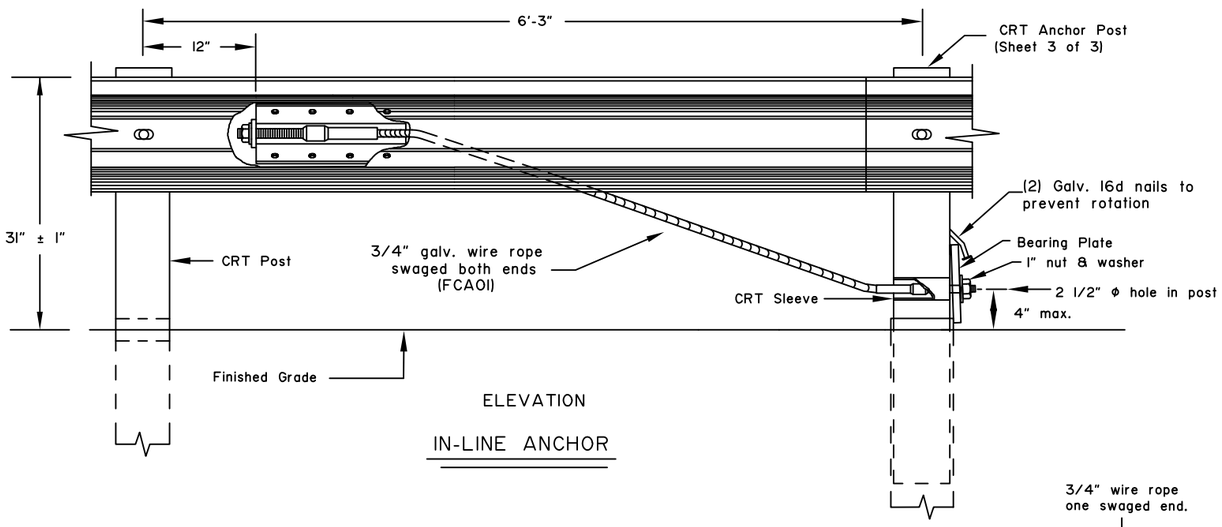


ELEVATION

IN-LINE ANCHOR

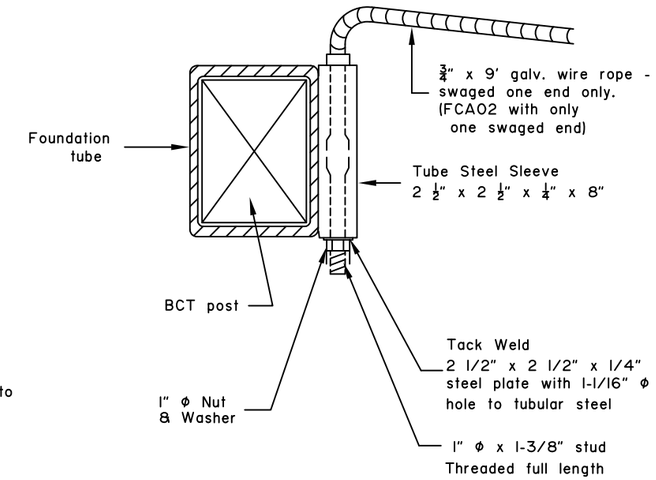


SIDE CABLE ATTACHMENT

## CONSTRUCTION NOTES

1. See Standard Drawings G-00 and G-05 for details not shown here.
2. All covered hardware must comply with the AASHTO/AGC/ARTBA "A Guide to Standardized Highway Barrier Hardware", latest edition. Designators are given in parenthesis, when possible.

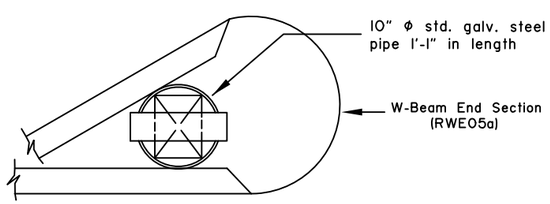


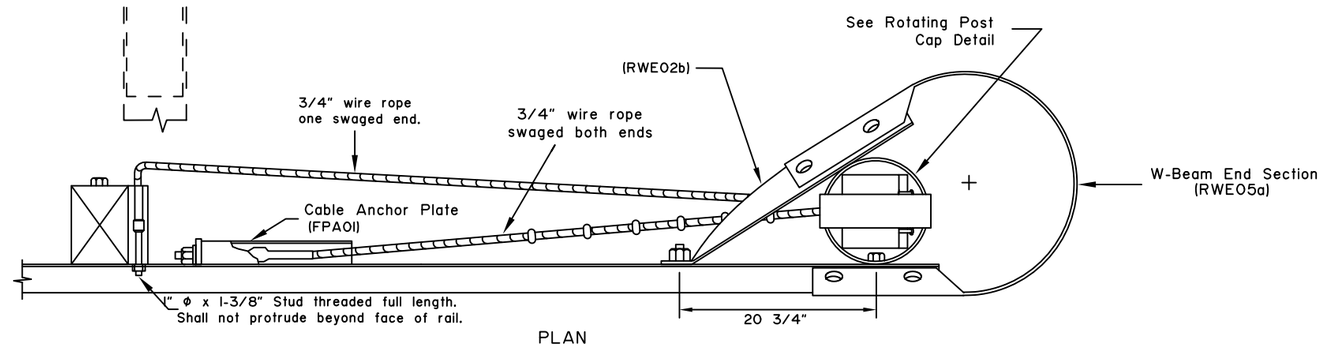


PLAN

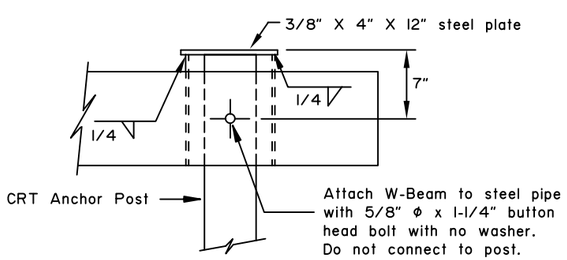


ROTATING POST CAP

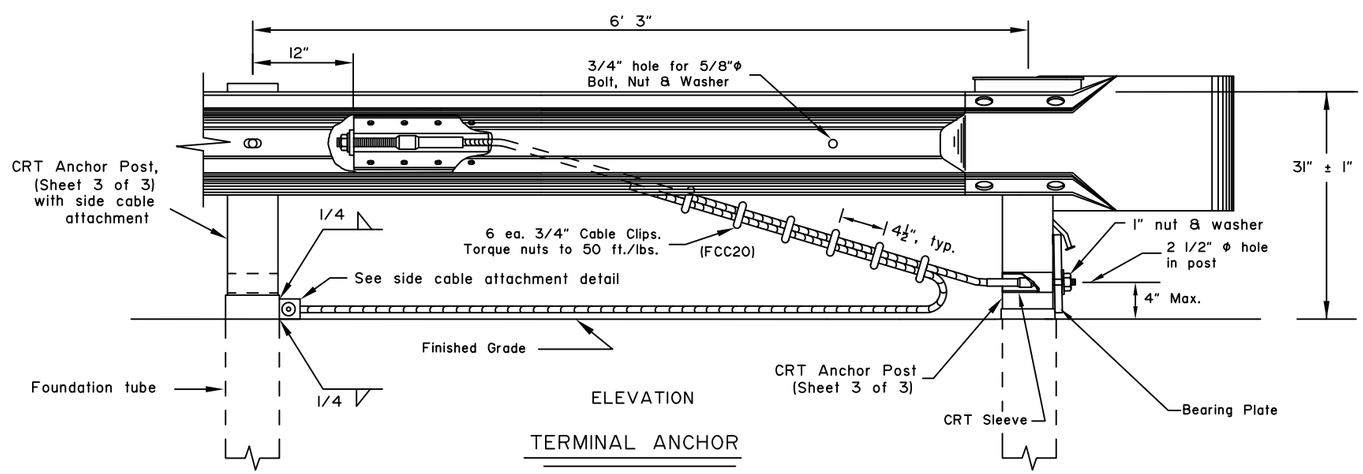


ELEVATION

TERMINAL ANCHOR

State of Alaska DOT&PF
ALASKA STANDARD PLAN

**W31 SHORT RADIUS GUARDRAIL**

Adopted as an Alaska Standard Plan by: Kenneth J. Fisher, P.E.
Chief Engineer

Adoption Date: 02/08/2019

Last Code and Stds. Review
By: Date:

Next Code and Standards Review date: 02/08/2029

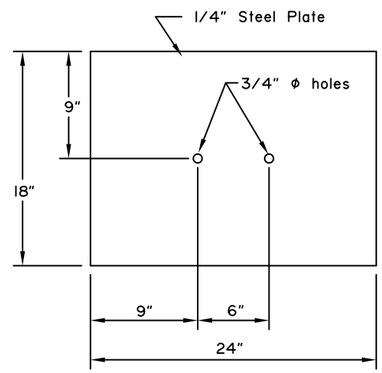


FOUNDATION TUBE SOIL PLATE

(PLS03)

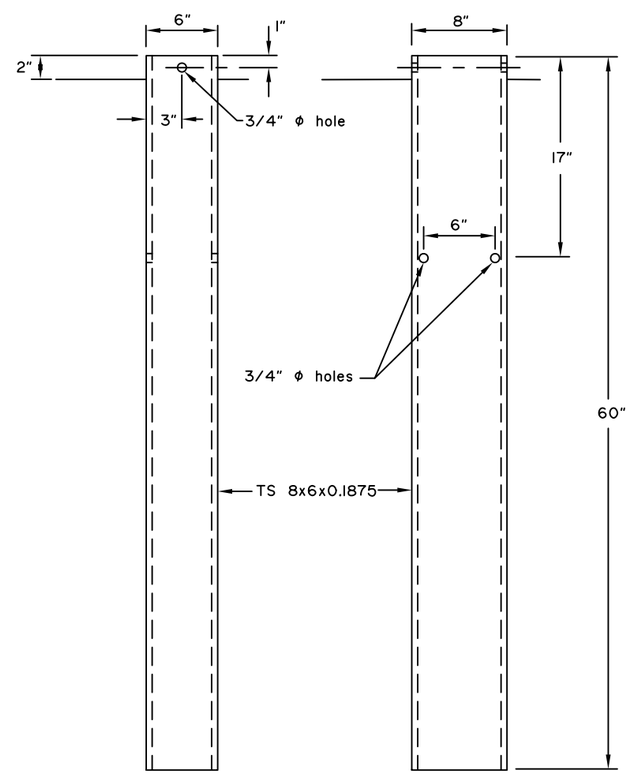


FOUNDATION TUBE

(PTE05)

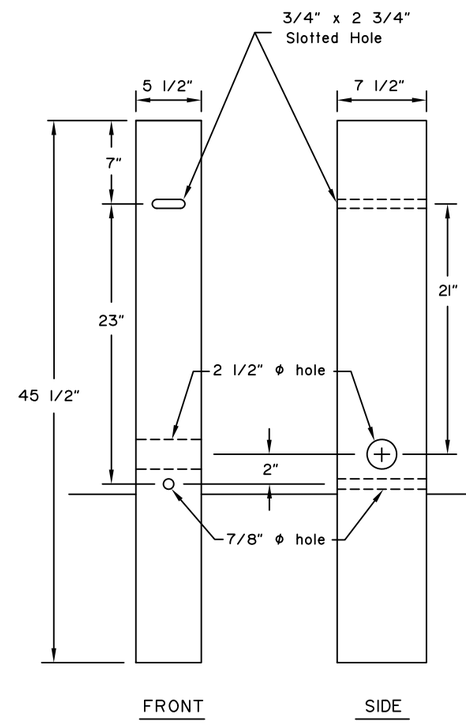


WOOD POST

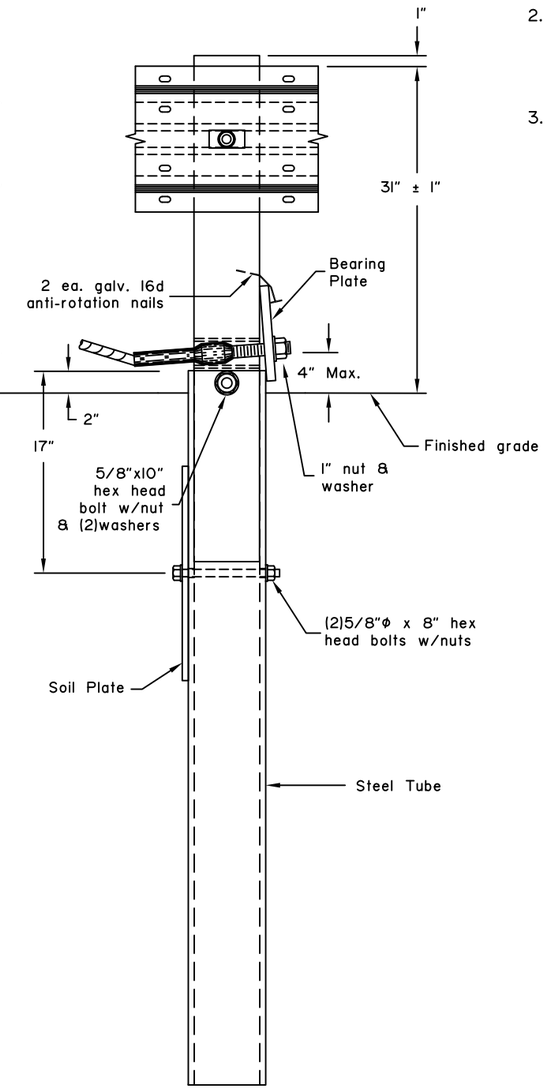


ASSEMBLY

## GENERAL NOTES:

1. Hardware details not shown here shall conform to drawings G-05W and G-00.
2. Comply with the AASHTO/AGC/ARTBA "A Guide to Standardized Highway Barrier Hardware", latest edition, for all covered guardrail hardware.
3. Not all bolt and nuts are shown for clarity purposes.

State of Alaska DOT&PF
ALASKA STANDARD PLAN

**W31 SHORT RADIUS GUARDRAIL**

Adopted as an Alaska Standard Plan by: Kenneth J. Fisher, P.E.
Chief Engineer

Adoption Date: 02/08/2019

Last Code and Stds. Review
By: Date:

Next Code and Standards Review date: 02/08/2029

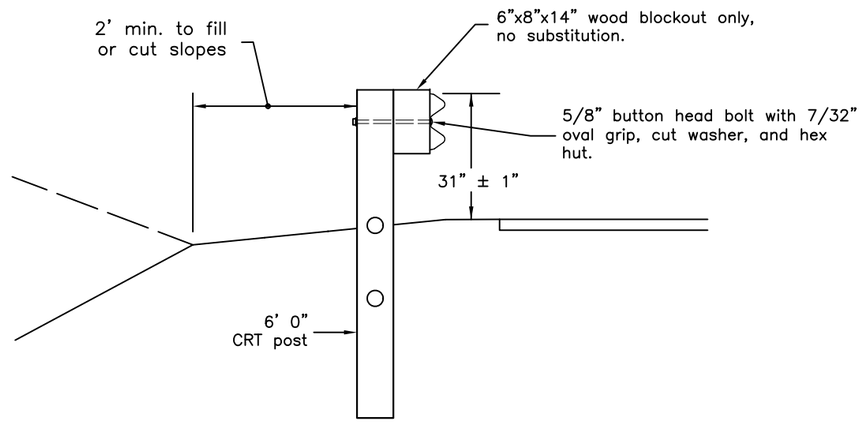


SECTION A–A

Typical for all CRT post locations shown in the plan view

## CONSTRUCTION NOTES

1. See Standard Drawings G–00 and G–05 for additional guardrail and guardrail hardware details. See G–26 Sheet 1 of 3 for CRT post details.
2. Provide 1' minimum lateral clearance between posts and underground obstruction.
3. Nesting of rail elements in the long span area is not allowed.

## DESIGN NOTES

1. Total installed length of guardrail and end anchorage (including end terminals, downstream anchors, etc.) shall not be less than 62.5' measured from the outermost CRT post on both the upstream and downstream ends.
2. No fixed objects allowed within 9'–0" from the back of posts where post are omitted. This is the crash–tested lateral deflection of the long span section.
3. Do no install curb in the long span area – this includes the area of CRT posts.

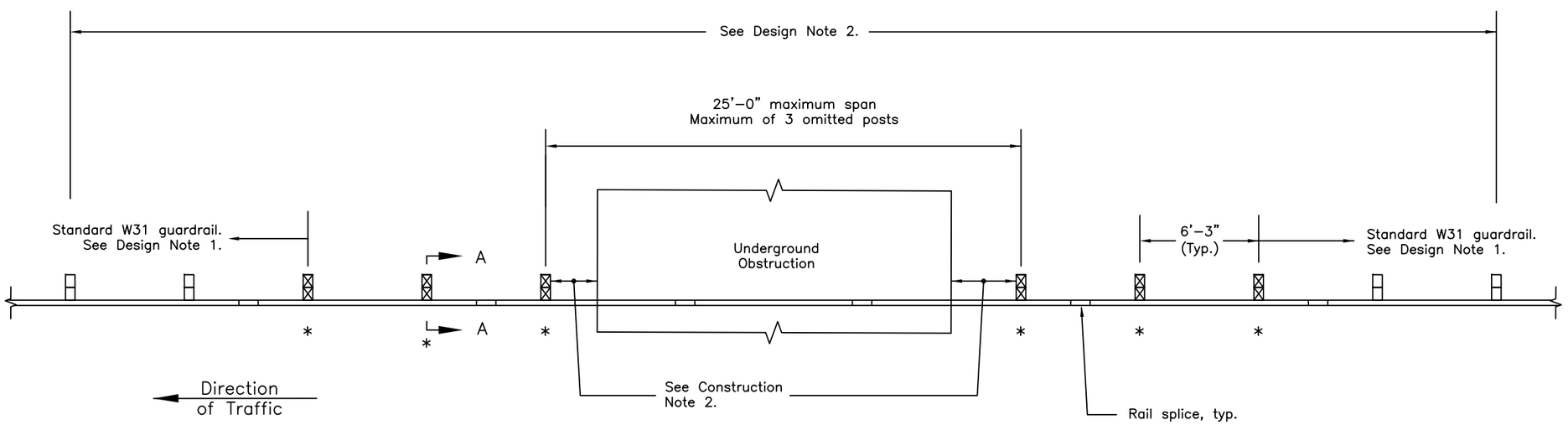


*–Designates CRT post location

LONG SPAN GUARDRAIL PLAN

State of Alaska DOT&PF
ALASKA STANDARD PLAN

**LONG SPAN**
**W31 GUARDRAIL**

Adopted as an Alaska Standard Plan by: Kenneth J. Fisher, P.E.
Chief Engineer

Adoption Date: 02/08/2019

Last Code and Stds. Review
By: Date:

Next Code and Standards Review date:02/08/2029

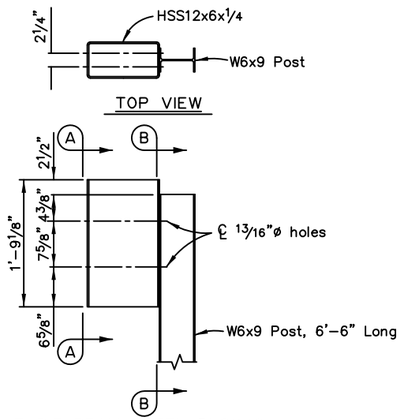


THRIE BEAM STEEL BLOCKOUT - LONG

See Note 4 for additional details

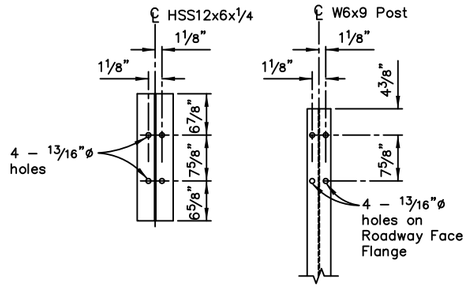


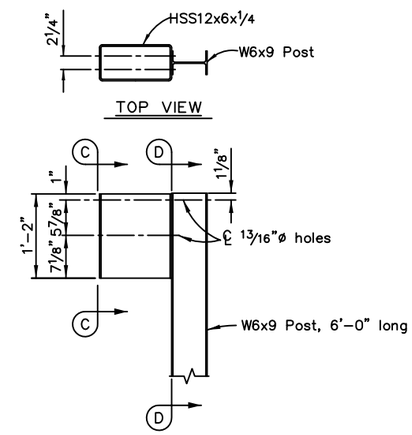


THRIE BEAM STEEL BLOCKOUT - SHORT

See Note 4 for additional details

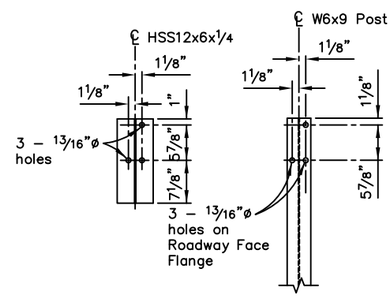


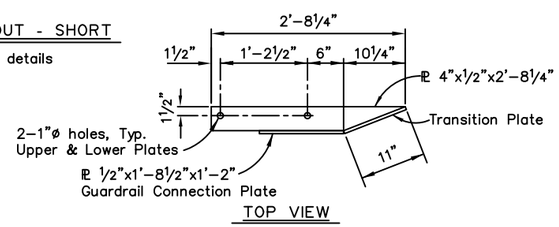


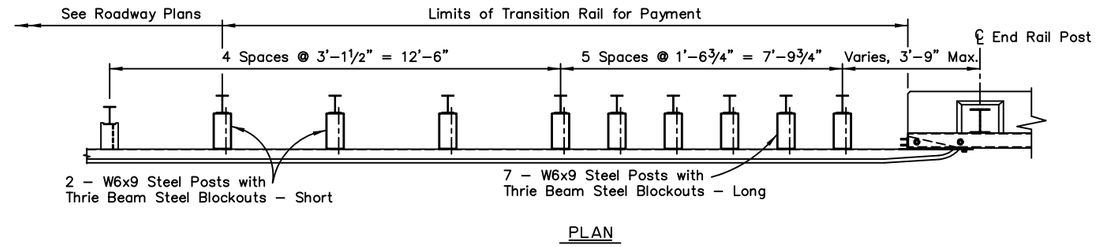


PLAN

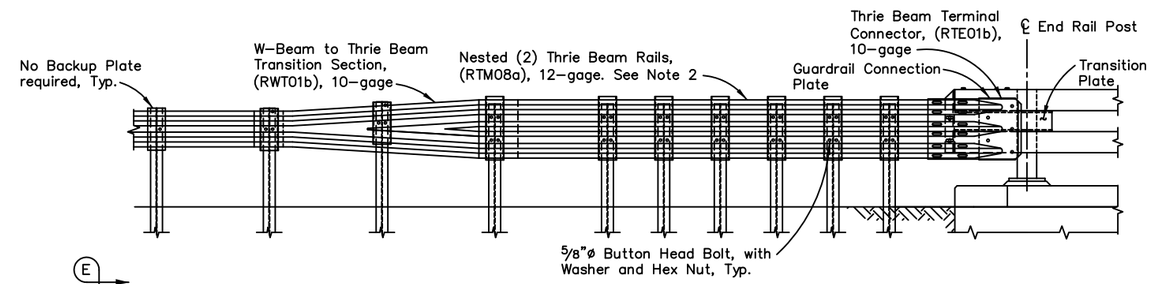


ELEVATION

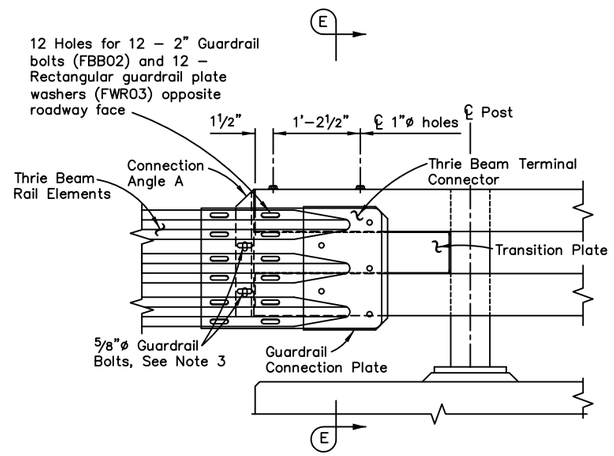


TRANSITION CONNECTION - ELEVATION

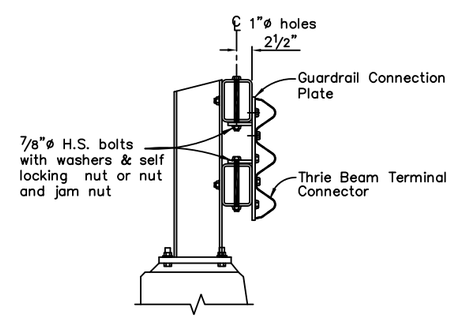


SECTION E-E

NOTES:

1. Use AASHTO M 180 for all guardrail and guardrail hardware. Use H.S. Bolts conforming to ASTM F3125 Grade A325. All other steel conforms to ASTM A709 Grade 50.
2. Lap approach guardrail to prevent snags from oncoming traffic.
3. Provide 4½" horizontal slots in approach guardrail. Adjust guardrail bolts for sliding fit.
4. Conform to G–00, G–05 and G–10 of the Standard Plans for all guardrail details not shown.

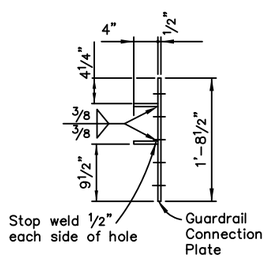


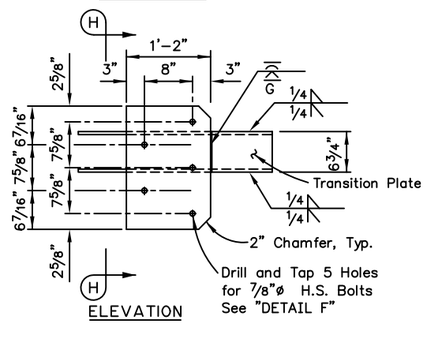


GUARDRAIL CONNECTION PLATE DETAILS

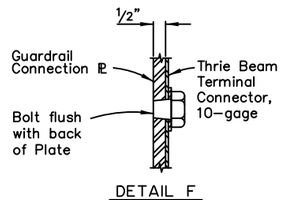


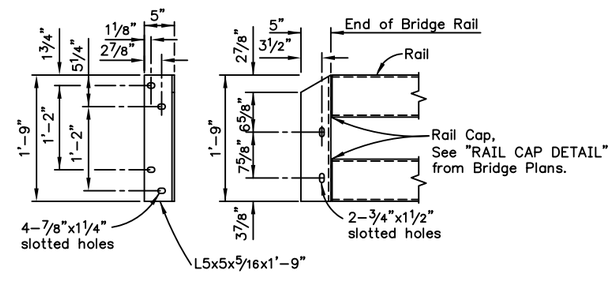


CONNECTION ANGLE A

No Scale

State of Alaska DOT&PF
ALASKA STANDARD PLAN

MASH BRIDGE RAIL
THRIE BEAM TRANSITION

Adopted as an Alaska Standard Plan by: Carolyn Morehouse
Carolyn Morehouse, P.E.
Chief Engineer

Adoption Date: 08/06/2020

Last Code and Stds. Review
By: SEM Date: 07/17/2020

Next Code and Standards Review date: 07/17/2030

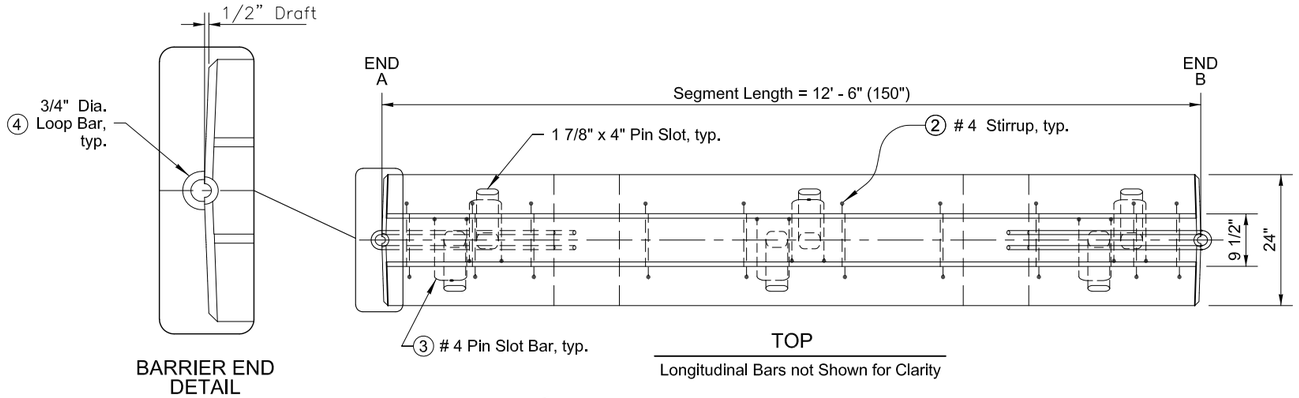


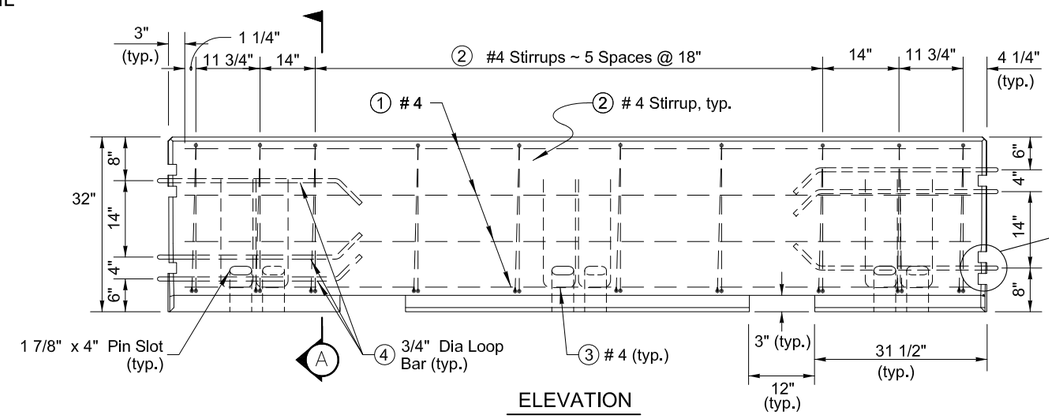


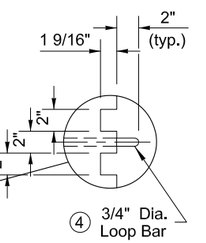


## CONSTRUCTION NOTES

1. This concrete barrier meets MASH TL–3 and may be used for temporary and permanent applications.
2. Use Class B–B concrete (5,000 psi) meeting the requirements of Section 550 of the Standard Specifications.
3. Provide the following unobstructed smooth deflection area behind barrier:

   18" when anchored to concrete
   22" when anchored to asphalt pavement
   64" when unanchored

4. When anchored, install anchor pins on the side facing traffic. Concrete barrier used as permanent median barrier in medians less than 8' in width shall be anchored to the roadway with anchor pins on both sides of the barrier.

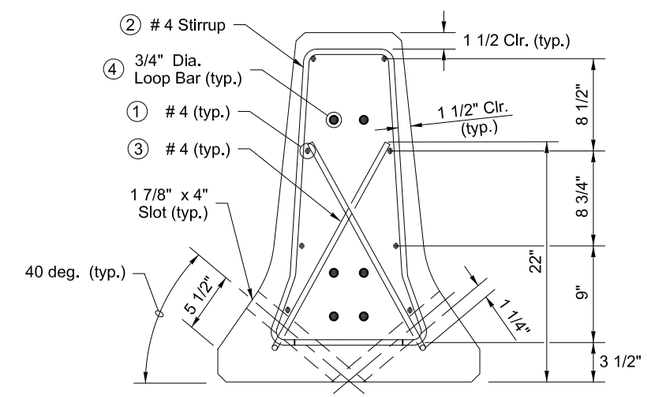


SECTION A

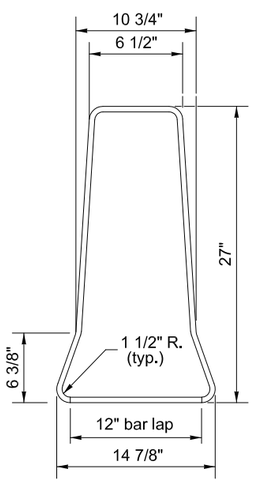


② STIRRUP BAR
#4 Rebar

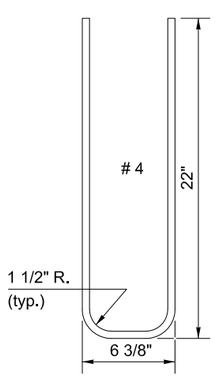


③ PIN SLOT BAR
#4 Rebar

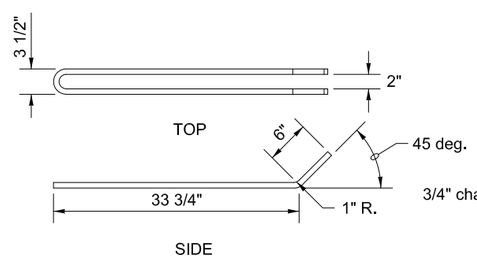


④ LOOP BAR DETAIL

3/4" Dia. Bar (ASTM A36)
Hot Dip Galvanize after Fabrication
(ASTM A123 OR AASHTO M 111)

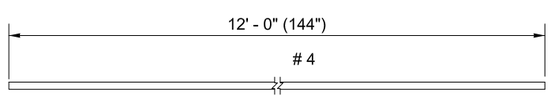


① LONGITUDINAL BAR
#4 Rebar

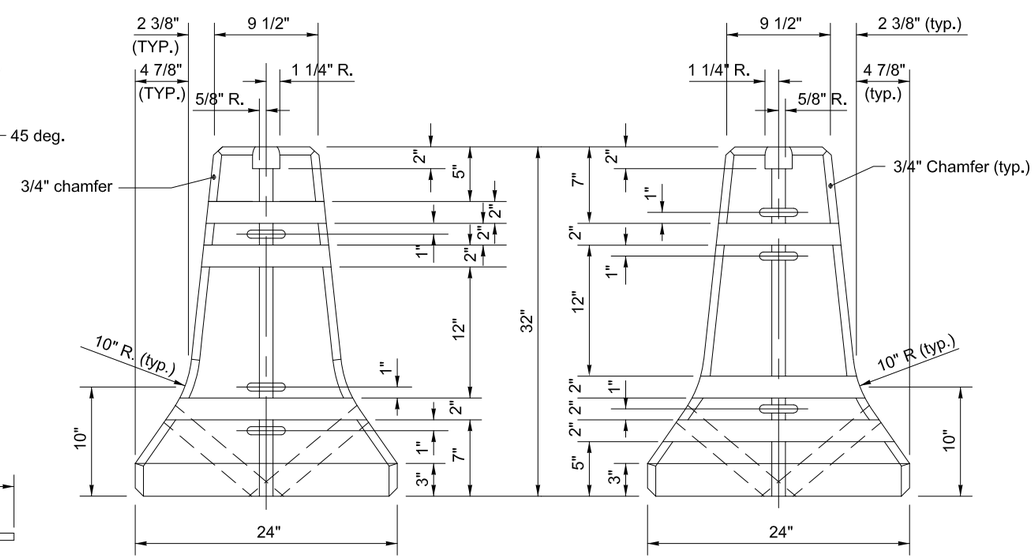


Note: Drawing not to scale

State of Alaska DOT&PF
ALASKA STANDARD PLAN

**MASH "F" SHAPE CONCRETE BARRIER**

Adopted as an Alaska Standard Plan by: Carolyn Morehouse
Carolyn Morehouse, P.E.
Chief Engineer

Adoption Date: 07/17/2020

Last Code and Stds. Review
By: LRG Date: 07/17/2020

Next Code and Standards Review date:07/17/2030

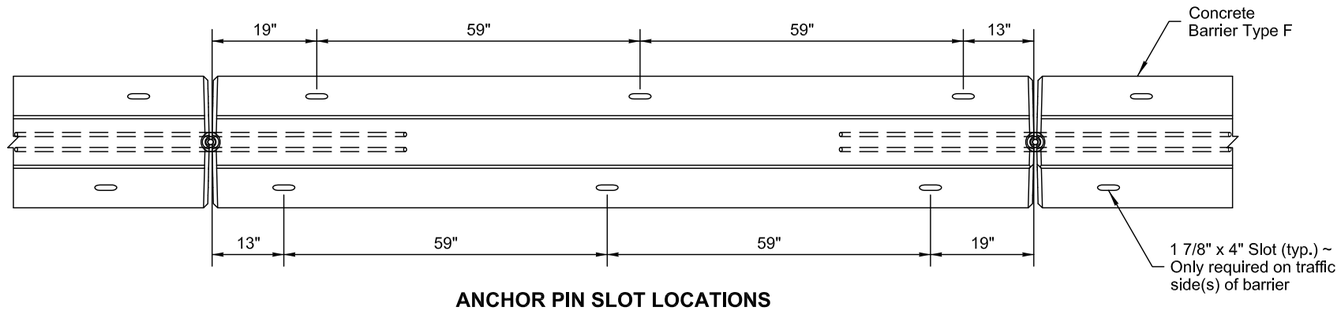


**ANCHOR PIN SLOT LOCATIONS**

Reinforcing steel not shown for clarity

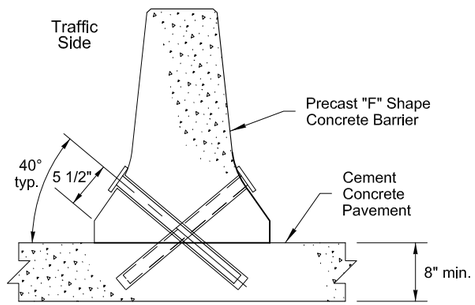


**CONCRETE ANCHOR PIN DETAILS**

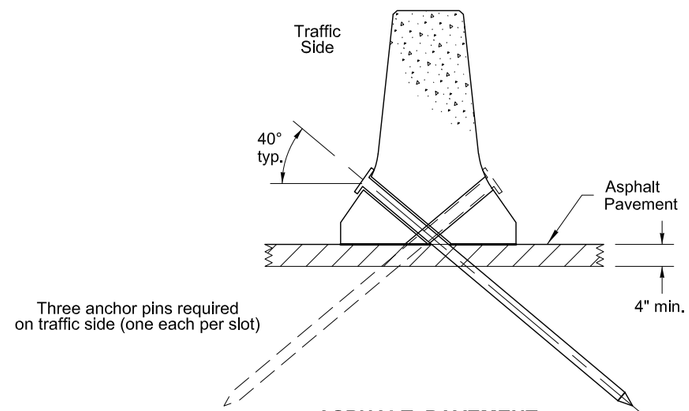


**ASPHALT PAVEMENT ANCHOR PIN LOCATIONS**

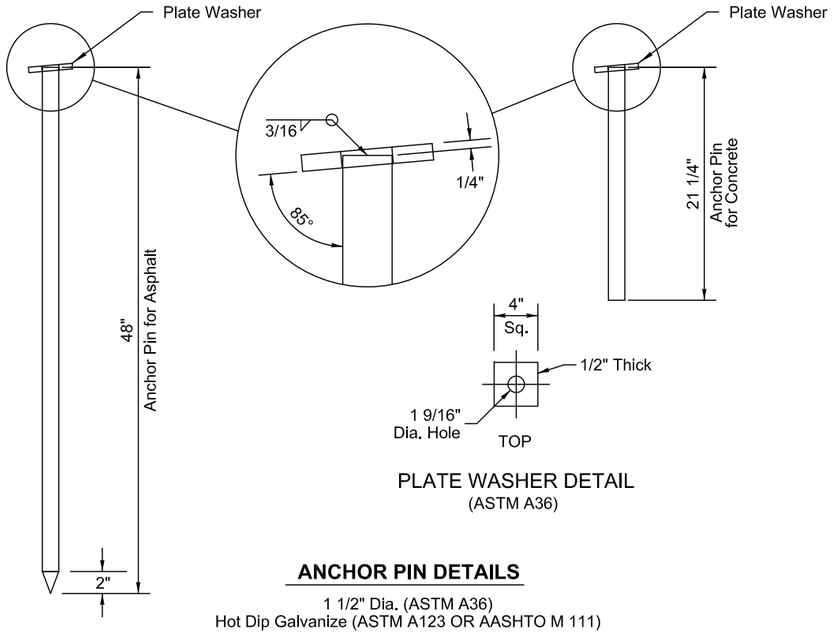


PLATE WASHER DETAIL
(ASTM A36)

**ANCHOR PIN DETAILS**

1 1/2" Dia. (ASTM A36)
Hot Dip Galvanize (ASTM A123 OR AASHTO M 111)

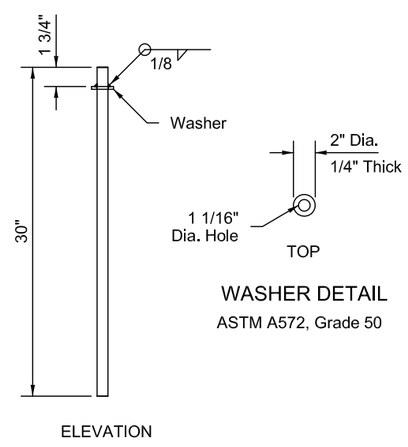


WASHER DETAIL
ASTM A572, Grade 50

**CONNECTING PIN DETAILS**

1" Dia. - ASTM A449
Hot Dip Galvanize

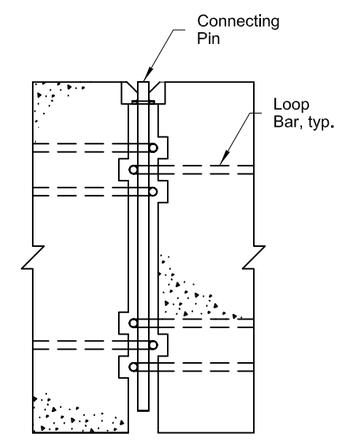


**BARRIER CONNECTION DETAIL**

CONSTRUCTION NOTES

1. When this barrier is used as a temporary traffic control device, provide retroflective tabs or stripes meeting the requirements of Section 643 of the Standard Specifications.
2. When this barrier is used in a permanent application, provide reflector assemblies meeting the requirements of Section 614 of the Standard Specifications.

Note: Drawing not to scale

State of Alaska DOT&PF
ALASKA STANDARD PLAN

MASH "F" SHAPE CONCRETE BARRIER

Adopted as an Alaska Standard Plan by: Carolyn Morehouse
Carolyn Morehouse, P.E.
Chief Engineer

Adoption Date: 07/17/2020

Last Code and Stds. Review
By: LRG Date: 07/17/2020

Next Code and Standards Review date:07/17/2030

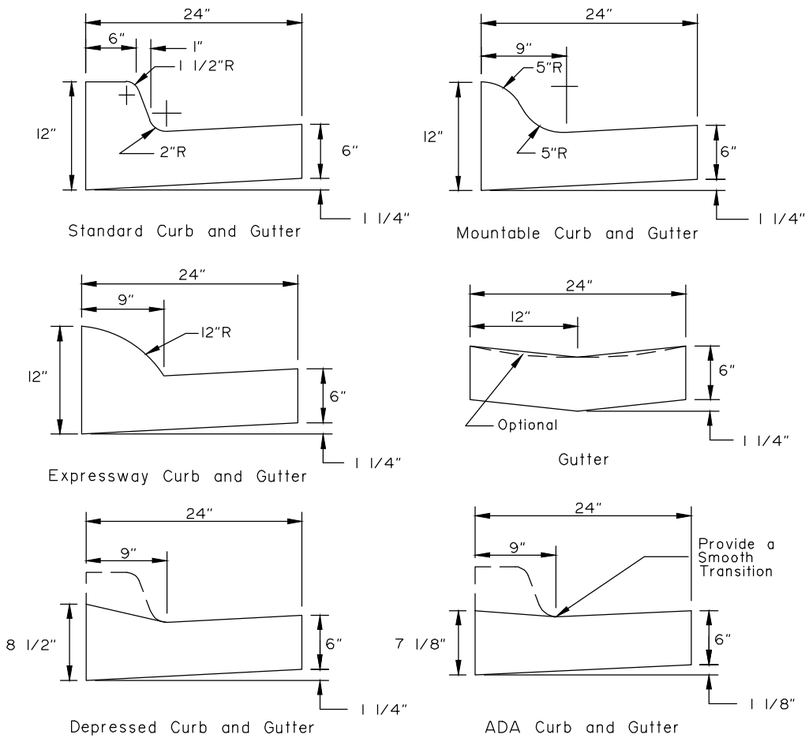


CURB and GUTTER DETAILS

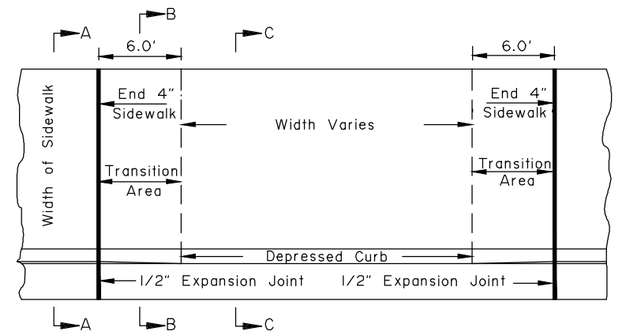


DRIVEWAY CURB CUT DETAILS

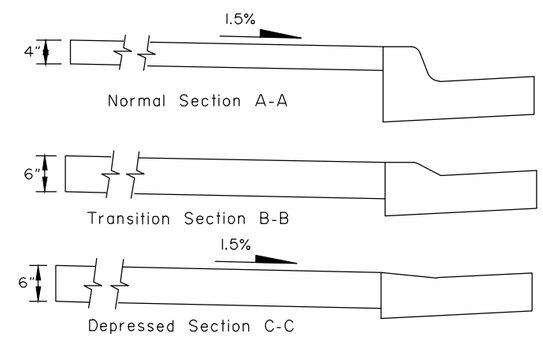


## CONSTRUCTION NOTES:

1. Use the type of curb and gutter shown on the plans.
2. Construct ramp runs and landings of concrete, regardless of whether the sidewalk is asphalt or concrete.
3. Construct ramp slopes at a 7.7% nominal grade, or flatter. Ramp slopes may be increased to a maximum of 8.3% when site conditions warrant it. Ramp lengths should be increased to keep grades under the 8.3% maximum, but are not required to exceed 15.0 feet. The resulting ramp grade at a 15.0 foot ramp length is acceptable even if it exceeds 8.3%.
4. Construct flare slopes at 8.3% (measured paralllel to the curb line) or flatter, sidewalk cross slopes at 1.5% nominal (1.0% min. and 2.0% max), and ADA Curb and Gutter gutter pan slopes at 4.7% nominal. Construct grade breaks perpendicular to ramp runs.
5. Do not construct flare slopes steeper than 10.0%, sidewalk cross slopes steeper than 2.0% and ADA Curb and Gutter gutter pan slopes steeper than 5.0%. These are the steepest slopes allowed under the 2006 ADA Standards for Transportation Facilities.
6. Provide a coarse broomed finish on ramp runs perpendicular to the ramp slope.
7. When approved by the Engineer, curb returns may be replaced with flares at locations where access to the side of a ramp run is free of poles, utility boxes, other obstructions, or non-accessible surfaces such as a dirt planter strips. See Standard Plan I-22 for flare details.
8. Install 24" wide detectable warning tiles for the full width of the ramp. Provide tiles with truncated domes meeting Section 705.1 of the 2006 ADA Standards for Transportation Facilities. Align truncated dome pattern in the predominant direction of wheelchair travel to permit wheels to roll between domes.
9. Maximum cross slope on upper landings, measured in any direction, is 2.0%. Maximum cross slope on ramps is 2.0% measured perpendicular to the ramp run.

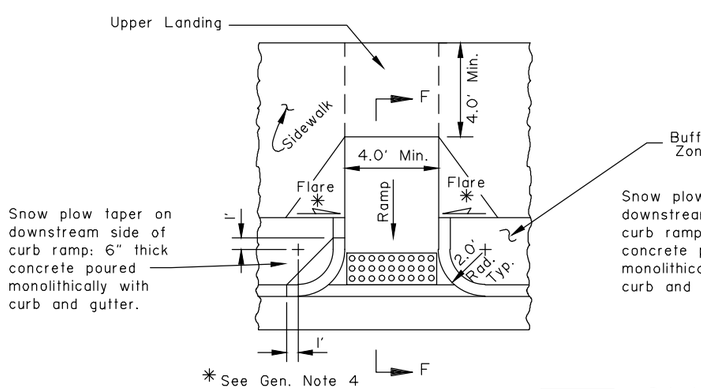


PLAN

= Detectable Warning Tile (see Note 8)

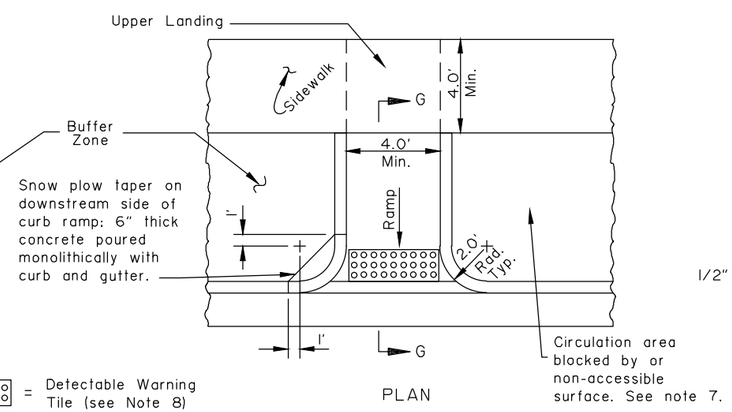


PLAN

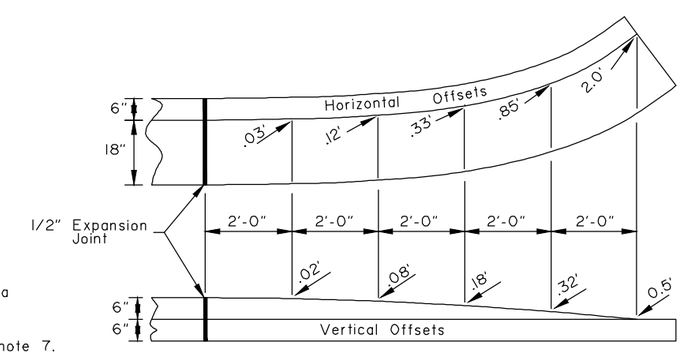


CURB and GUTTER TERMINATION TRANSITIONS

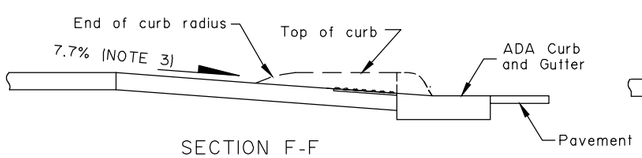


SECTION F-F
Returned Curb Ramp with Sidewalk for Pedestrians

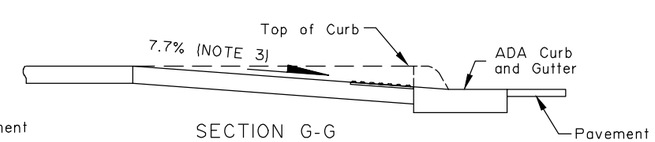


SECTION G-G
Returned Curb Ramp for Pedestrians

Note: Drawing not to scale

State of Alaska DOT&PF
ALASKA STANDARD PLAN

CURB CUT
CURB & GUTTER
AND CURB RAMP DETAILS

Adopted as an Alaska Standard Plan by: Carolyn Morehouse
Carolyn Morehouse, P.E.
Chief Engineer

Adoption Date: 7/17/2020

Last Code and Stds. Review
By: KLH Date: 7/8/2020

Next Code and Standards Review date: 7/8/2030

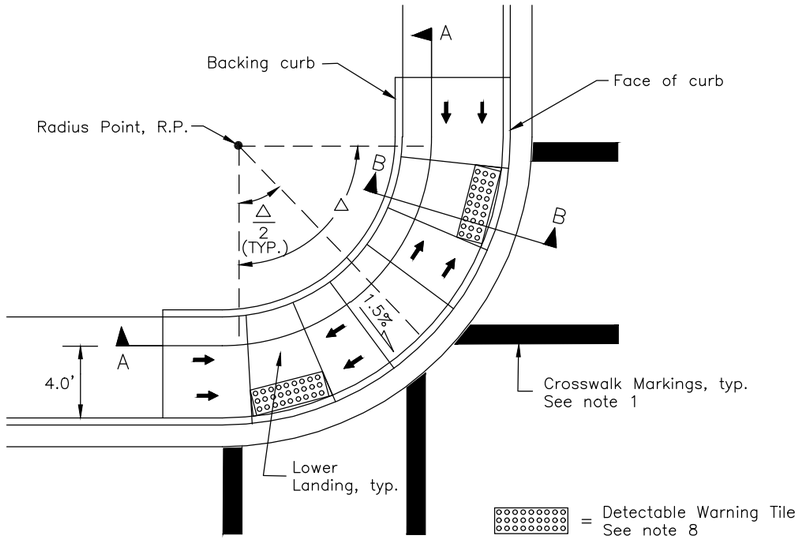


TWO CROSSING DIRECTIONS

At corner

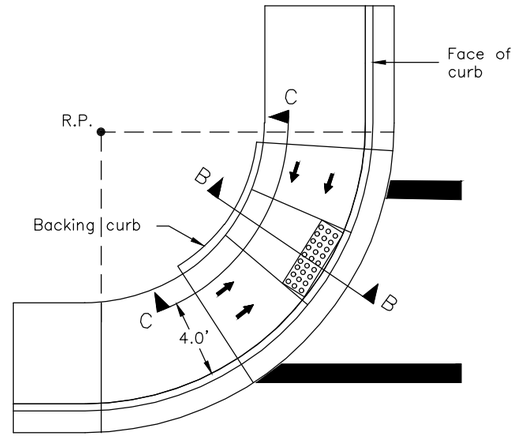


ONE CROSSING DIRECTION

At corner – generic location shown

## CONSTRUCTION NOTES:

1. See plans for ramp type at specific locations. See striping plans for crosswalk layouts.
2. Construct ramp runs and landings of concrete, regardless of whether the sidewalk is asphalt or concrete.
3. When one parallel curb ramp will serve two directions, use the One Crossing Direction detail and refer to the striping plans for crosswalk layouts.
4. Ramp run lengths are shown for a flat sidewalk grade. For other sidewalk grades, increase or decrease ramp and flare lengths to maintain the slopes shown.
5. Construct ramp slopes at a nominal 7.7% grade, or flatter. Ramp slopes may be increased to a maximum of 8.3% when site conditions warrant it. Ramp lengths should be increased to keep grades under the 8.3% maximum, but are not required to exceed 15.0 feet. The resulting ramp grade at a 15.0 foot ramp length is acceptable even if it exceeds 8.3%.
6. Construct sidewalk cross slopes at 1.5% nominal (1.0% min. and 2.0% max).
7. Provide a coarse broomed finish running perpendicular to the curb on ramp runs and upper landings and parallel to the curb on lower landings.
8. Install 24" detectable warning tiles meeting Section 705.1 of the 2006 ADA Standards for Transportation Facilities for the full width of the ramp.
9. Maximum cross slope on lower landings is 2.0% as measured in any direction. Maximum cross slope on ramps is 2.0% measured perpendicular to the ramp run.
10. Provide 4" minimum thick concrete on ramps and landings.

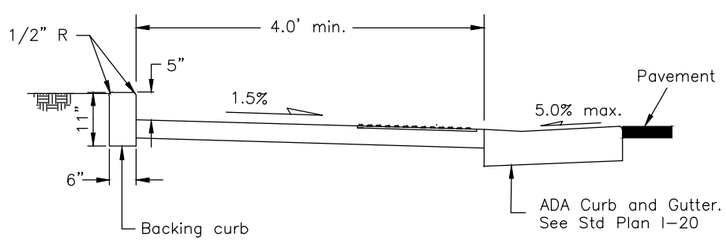


SECTION B–B

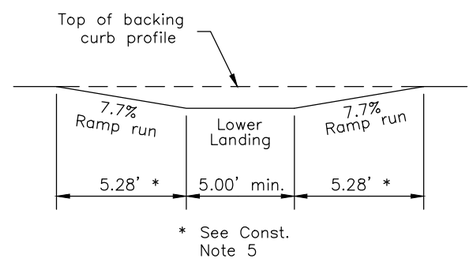


PROFILE C–C

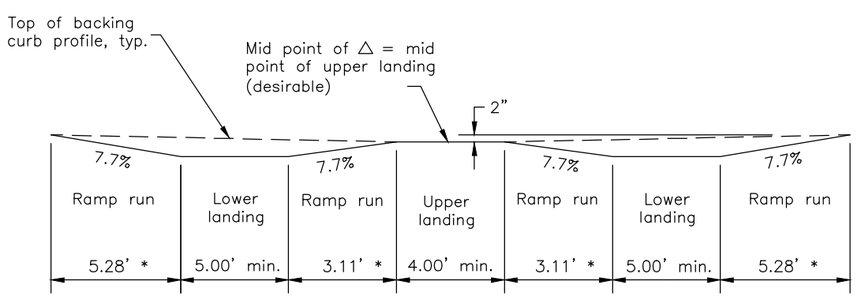


PROFILE A–A

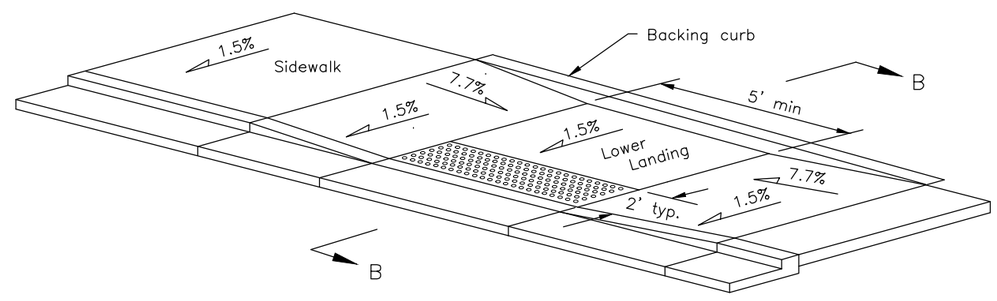


MID–BLOCK

Note: Drawing not to scale

State of Alaska DOT&PF
ALASKA STANDARD PLAN

PARALLEL CURB RAMP

Adopted as an Alaska Standard Plan by: Carolyn Morehouse
Carolyn Morehouse, P.E.
Chief Engineer

Adoption Date: 7/17/2020

Last Code and Stds. Review
By: KLH Date: 7/8/2020

Next Code and Standards Review date: 7/8/2030

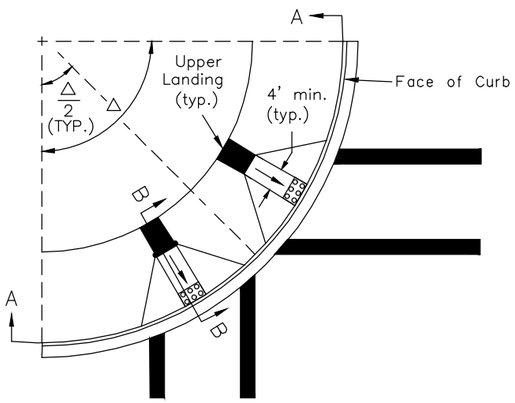


TWO CROSSING DIRECTIONS
At corner

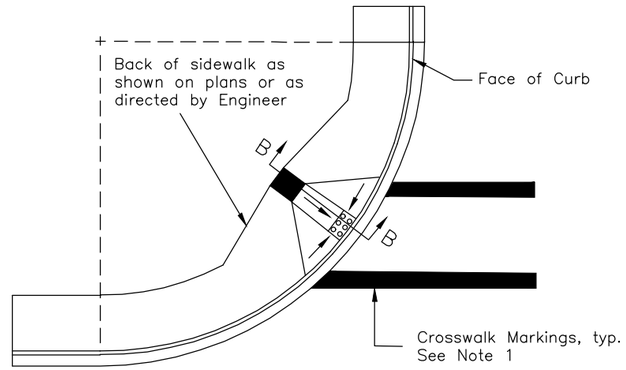


ONE CROSSING DIRECTION
At corner

= Detectable Warning Tile See Note 9

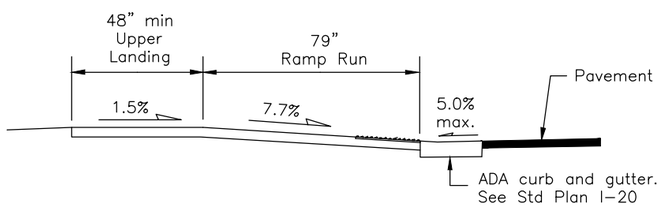


SECTION B–B

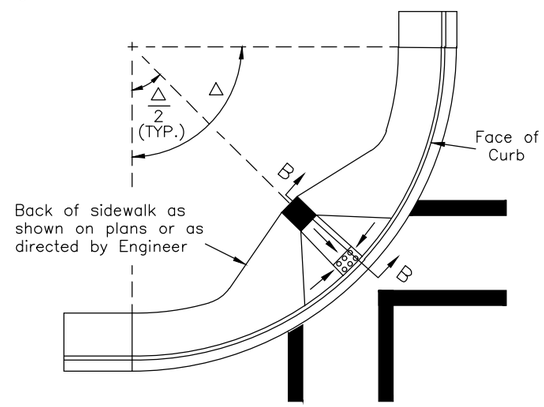


ONE RAMP – TWO DIRECTIONS
At corner

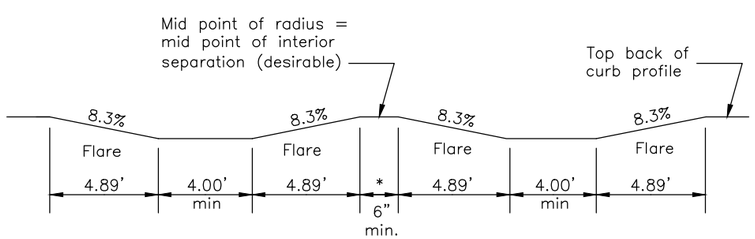


PROFILE A–A

* This dimension is adjustable depending on the curb radius and location of ramps

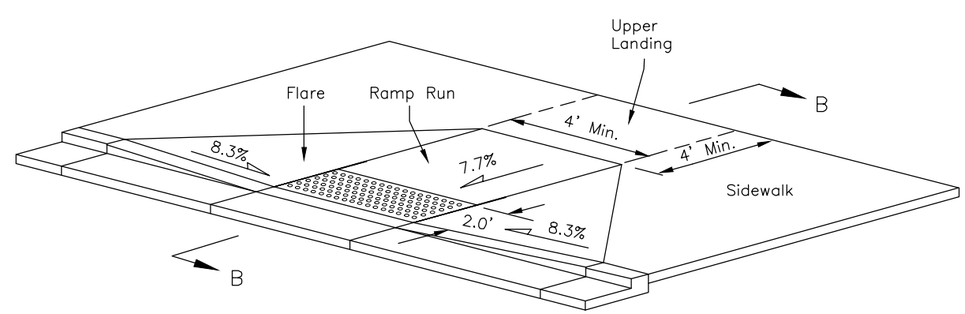


MID–BLOCK

Note: Drawing not to scale

## CONSTRUCTION NOTES

1. See plans for ramp type at specific locations. See striping plans for crosswalk layouts.
2. Construct ramp runs perpendicular to the curb face.
3. Construct ramp runs, flares, and upper landings of concrete, regardless of whether the sidewalk is asphalt or concrete.
4. Ramp run and flare lengths are shown for a flat sidewalk grade. For other sidewalk grades, increase or decrease ramp and flare lengths to maintain the slopes shown.
5. Construct ramp slopes at a nominal 7.7% grade, or flatter. Ramps slopes may be increased to a maximum of 8.3% when site conditions warrant it. Ramp lengths should be increased to keep grades under the 8.3% maximum, but are not required to exceed 15.0 feet. The resulting ramp grade at a 15.0 foot ramp length is acceptable even if it exceeds 8.3%.
6. Construct flare slopes at 8.3% (measured parallel to the curb line adjacent to the top back of curb) or flatter, and sidewalk cross slopes at a nominal 1.5% (1.0% min., 2.0% max). Do not construct flare slopes steeper than 10.0%, or sidewalk cross slopes steeper than 2.0%,
7. Provide a coarse broomed finish running parallel to the curb on ramp runs and flares.
8. When approved by the Engineer, flares may be replaced with a curb at locations where access to the side of a ramp run is blocked by poles, utility boxes, other obstructions, or by a non–accessible surface such as a dirt planter strip. See Standard Plan I–20 for details.
9. Install 24" detectable warning tiles for the full width of the ramp. Provide tiles with truncated domes meeting Section 705.1 of the 2006 ADA Standards for Transportation Facilities.
10. Maximum cross slope on upper landings, measured in any direction, is 2.0%. Maximum cross slope on ramps is 2.0% measured perpendicular to the ramp run.
11. Provide 4" minimum thick concrete on ramps, flares and landings

State of Alaska DOT&PF
ALASKA STANDARD PLAN

PERPENDICULAR CURB RAMP

Adopted as an Alaska Standard Plan by: Carolyn Morehouse
Carolyn Morehouse, P.E.
Chief Engineer

Adoption Date: 7/17/2020

Last Code and Stds. Review
By: KLH Date: 7/8/2020

Next Code and Standards Review date: 7/8/2030

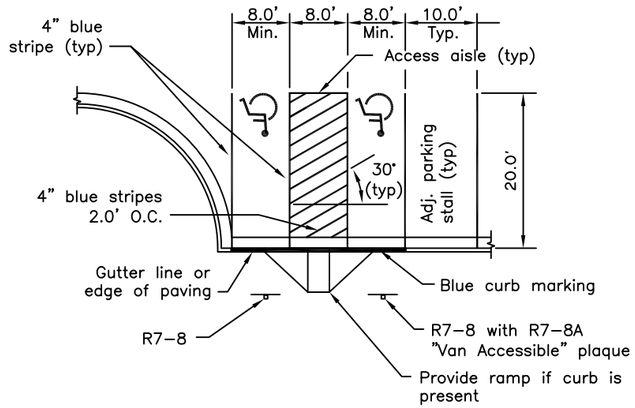


PARKING LOT ACCESSIBLE PERPENDICULAR PARKING

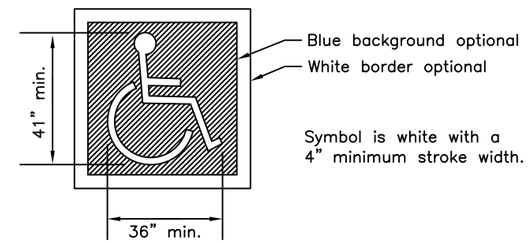


PAVEMENT MARKING SYMBOL DETAIL

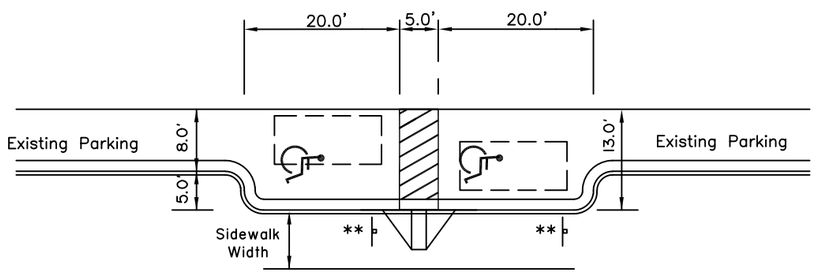


ACCESSIBLE ON-STREET PARALLEL PARKING PARTIAL INSET

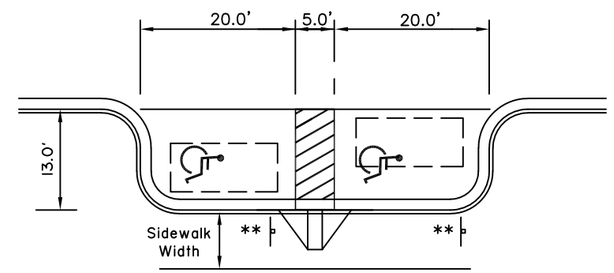


ACCESSIBLE ON-STREET PARALLEL PARKING FULL INSET

## GENERAL NOTES:

1. Accessible aisles and accessible routes and those pathways leading from the accessible parking space to the sidewalk shall be free of any obstructions, fixtures or loose surfaces.
2. See standard drawing I-20, I-21, I-22 for curb and curb ramp details.
3. All curb ramps shall be constructed of concrete.
4. The slope for all accessible parking spaces, van accessible parking spaces and access aisles shall not exceed 50:1 in any direction.
5. Although only perpendicular ramps are shown, either parallel or perpendicular ramps are allowable, space permitting.

** R7-8 "Reserved Parking" and, where appropriate (see note 3), R7-8A, "Van Accessible".

## ON-STREET PARALLEL PARKING NOTES

1. The 13' width provides for 8' wide parking with a 5' wide access aisle on either side of a car.
2. Add a new curb ramp and 5' aisle between parking places for each additional two accessible parking spaces.
3. Parking spaces may be made van accessible by providing an unobstructed 8' sidewalk width next to each parking space. Ensure curb ramps, parking meters, sign posts, etc. do not encroach on the area where a van's lift would operate.
4. In some cases, ADAAG may allow normal-width parking spaces at the beginning and end of blocks to be designated as accessible. See the latest ADAAG.

State of Alaska DOT&PF
ALASKA STANDARD PLAN

**ACCESSIBLE PARKING**

Adopted as an Alaska Standard Plan by: Kenneth J. Fisher, P.E.
Chief Engineer

Adoption Date: 02/08/2019

Last Code and Stds. Review
By: Date:

Next Code and Standards Review date:02/08/2029

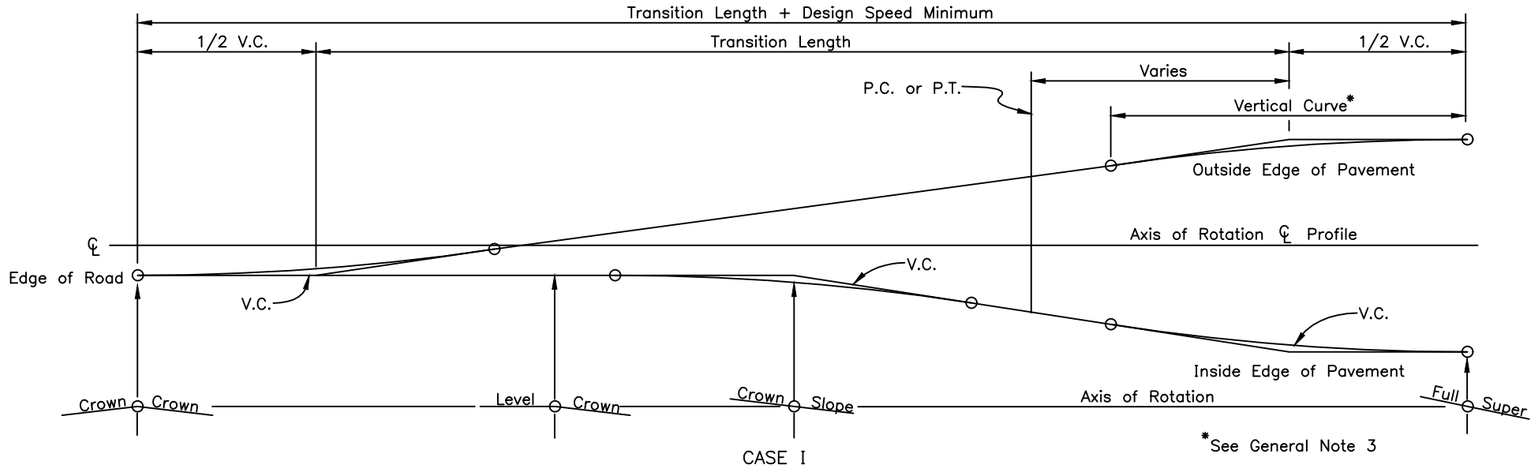


CASE I
PAVEMENT REVOLVED ABOUT CENTERLINE

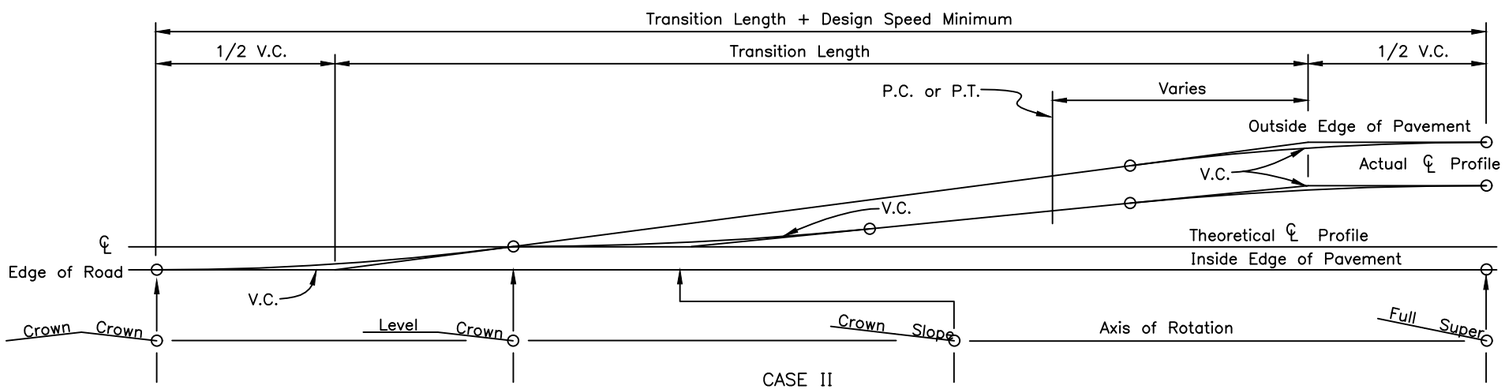


CASE II
PAVEMENT REVOLVED ABOUT INSIDE EDGE
TO BE USED WHERE DRAINAGE IS THE GOVERNING CONSIDERATION

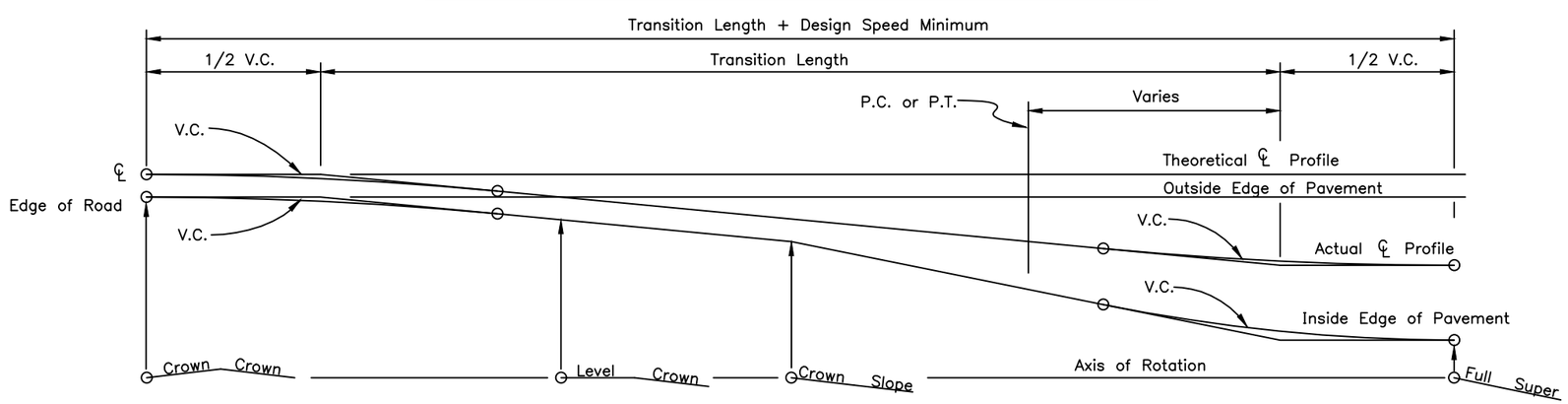


CASE III
PAVEMENT REVOLVED ABOUT OUTSIDE EDGE TO BE
USED WHERE OVERALL APPEARANCE IS THE MAIN CONTROL

## GENERAL NOTES:

1. Location of transition length relative to horizontal curves will be shown on the plans or as directed by the Engineer.
2. Widening for guardrail or curvature will not change the location of the axis of rotation.
3. Minimum vertical curve length in feet shall be the numerical value of the design speed in M.P.H.
4. Superelevation shall be built into the subgrade and carried through the shoulders.

State of Alaska DOT&PF
ALASKA STANDARD PLAN

SUPERELEVATION TRANSITION

Adopted as an Alaska Standard Plan by: Carolyn Morehouse
Carolyn Morehouse, P.E.
Chief Engineer

Adoption Date: 7/17/2020

Last Code and Stds. Review
By: KLK Date: 7/8/2020

Next Code and Standards Review Date: 7/8/2030

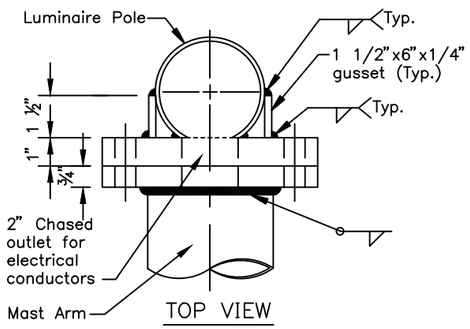


TOP VIEW

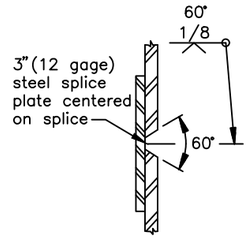


SPLICE DETAILS

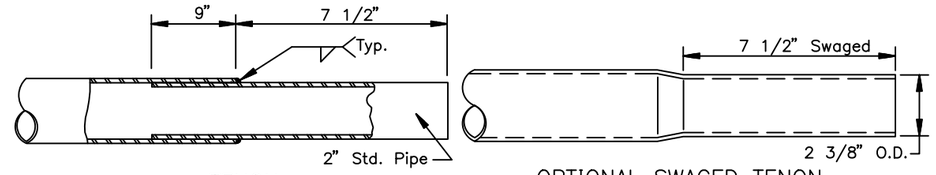


TENON

OPTIONAL SWAGED TENON

END OF MAST ARM DETAIL

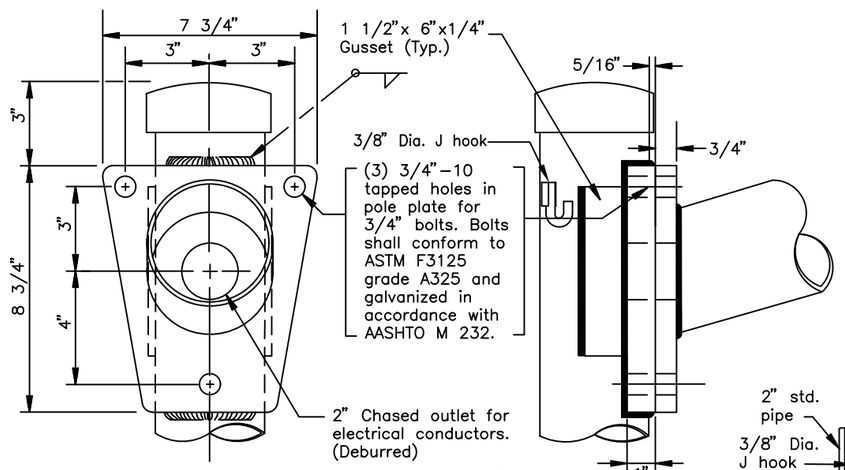


FRONT VIEW

SIDE VIEW

MAST ARM CONNECTION DETAIL

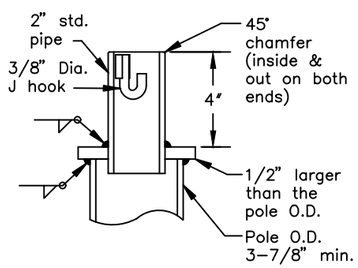


OFFSET LIGHTING STANDARD POLE TOP DETAIL
(CUTAWAY FOR CLARITY)

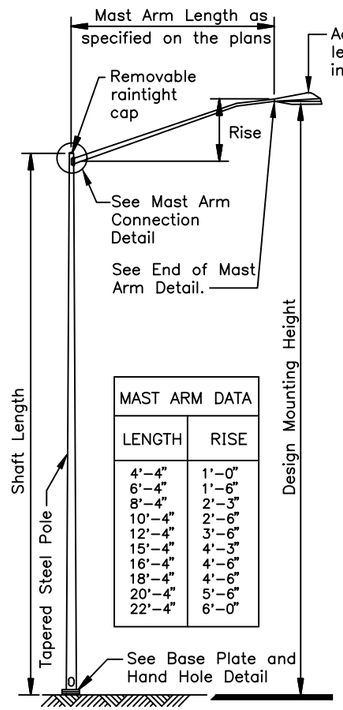


| MAST ARM DATA | |
|---|---|
| LENGTH | RISE |
| 4'-4" | 1'-0" |
| 6'-4" | 1'-6" |
| 8'-4" | 2'-3" |
| 10'-4" | 2'-6" |
| 12'-4" | 3'-6" |
| 15'-4" | 4'-3" |
| 16'-4" | 4'-6" |
| 18'-4" | 4'-6" |
| 20'-4" | 5'-6" |
| 22'-4" | 6'-0" |

ELECTROLIER ELEVATION
COBRA HEAD

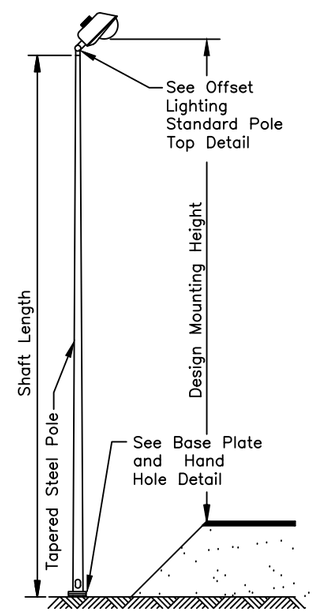


ELECTROLIER ELEVATION
OFFSET

## GENERAL NOTES

1. Design and fabricate all shafts to support a mast arm 22' long with luminaire. Assume each offset fixture weighs 60 lbs. and has an effective projected area of 2.8 SF. Assume each Cobra head weighs 55 lbs. and has an effective projected area of 1.2 square feet. With this dead load, limit the angular rotation of the pole top to 1° 40' maximum.
2. Weld size to be determined by manufacturer.
3. Mounting height, if specified in the plans, refers to the height of luminaire above the finished roadway surface. Adjust each pole's shaft length to maintain this difference in elevation whenever slope and/or offset varies.
4. Minimum outside diameter at the top of pole equals 3-7/8". Pole diameter shall taper uniformly from the top of pole to the base plate, with a maximum taper rate of 0.15" per foot.
5. Mast arm rise may vary ±0.5ft from the values listed in the table.
6. Locate the handhole at 90 degrees to the mast arm on the side of pole downstream from traffic flow.
7. Furnish all poles with a j-hook to support the illumination tap conductors. Furnish all mast arm poles with a removable raintight cap.
8. Frangible couplings shall be NCHRP 350, Test Level 3 compliant and installed in accordance with the manufacturers written instructions. A MASH compliant device does not exist at this time. See SPDR for more info.
9. Frangible couplings shall be installed into flush mounted female anchors so that no fixed hardware extends above the foundation top.
10. Install all components of the breakaway support system in accordance with the manufacturer's written instructions.
11. Fabricate the skirt from four pieces of 0.06" thick 3003 h-14 aluminum sheet. Bend each plate to provide corners with a 3/4" radius. Assemble the skirt with □10 x 3/8" self tapping stainless screws or pop rivets. The assembled skirt measures about 12-7/8" square.

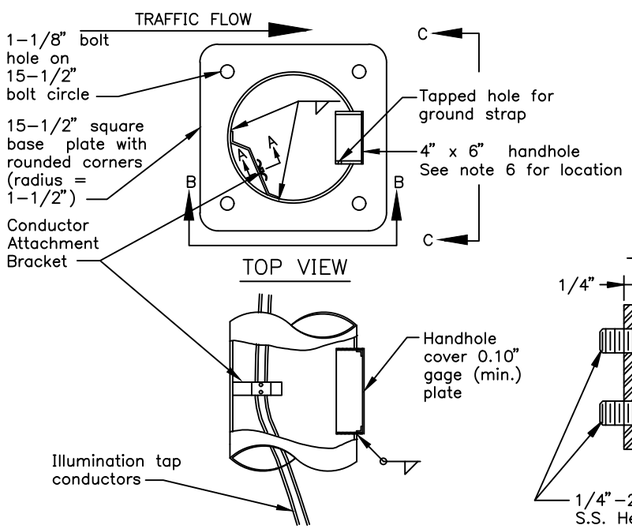


TOP VIEW

BASE PLATE AND HAND HOLE DETAIL

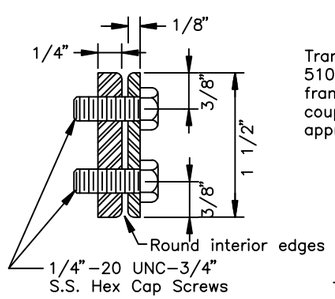


SECTION A-A

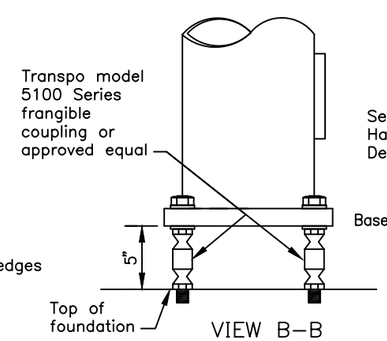


VIEW B-B

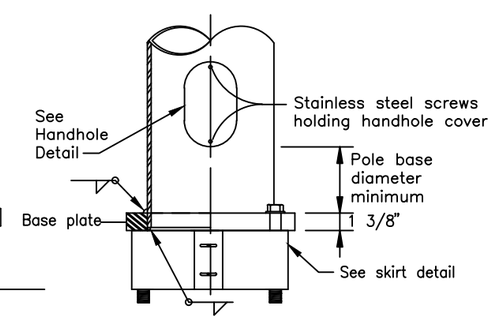


VIEW C-C

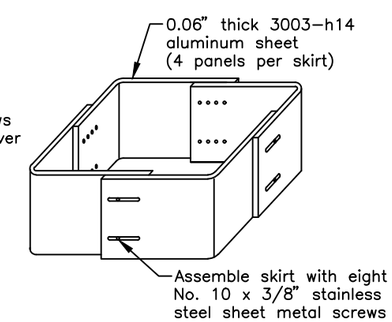


SKIRT DETAIL

State of Alaska DOT&PF
ALASKA STANDARD PLAN

LIGHTING STANDARDS

Adopted as an Alaska Standard Plan by: Carolyn Morehouse
Carolyn Morehouse, P.E.
Chief Engineer

Adoption Date: 7/17/2020

Last Code and Stds. Review
By: KLK,MJM Date: 7/8/2020

Next Code and Standards Review Date: 7/8/2030

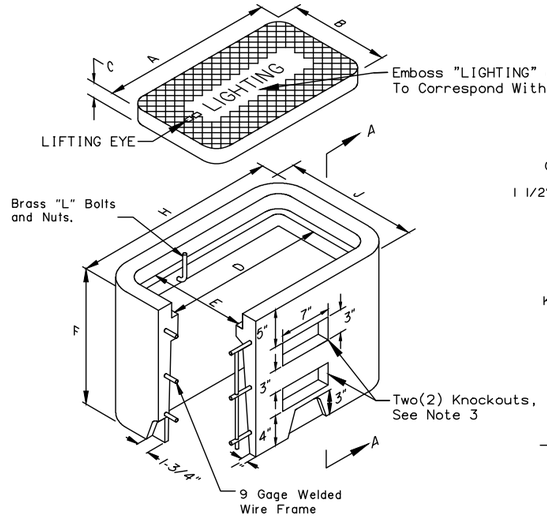


ISOMETRIC

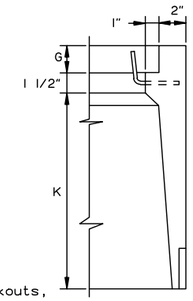

SECTION A-A

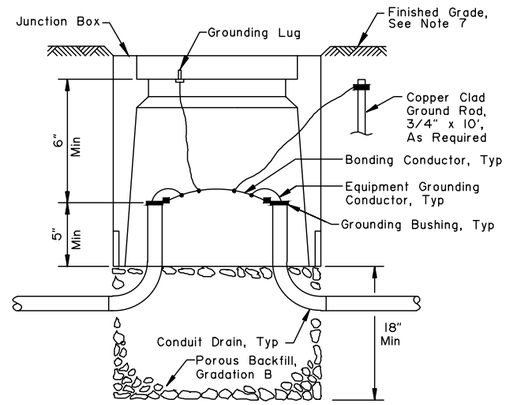


ELEVATION

TYPE I & IA JUNCTION BOX

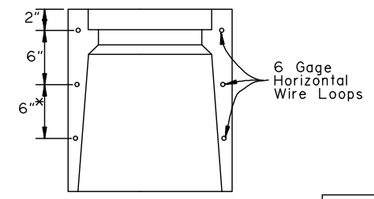


ALTERNATE REINFORCING

*Type IA Only

| | DIMENSIONS (IN) | |
|---|---|---|
| | TYPE I | TYPE IA |
| A | 15 | 22 3/4 |
| B | 10 | 13 1/4 |
| C | 1 3/4 | 2 |
| D | 13 1/2 | 21 1/4 |
| E | 8 1/2 | 11 3/4 |
| F | 12 | 18 |
| G | 1 3/4 | 2 |
| H | 19 1/2 | 27 1/4 |
| J | 14 1/2 | 17 3/4 |
| K | 8 3/4 | 14 1/2 |

| | DIMENSIONS (IN) | | |
|---|---|---|---|
| | TYPE II | TYPE III | TYPE IV |
| A (Max) | 30 | 30 | 30 |
| B (Max) | 30 | 30 | 36 |
| C (Min) | 22 | 22 | 30 |
| D (Min) | 22 | 22 | 24 |
| E (Min) | 24 | 24 | 30 |

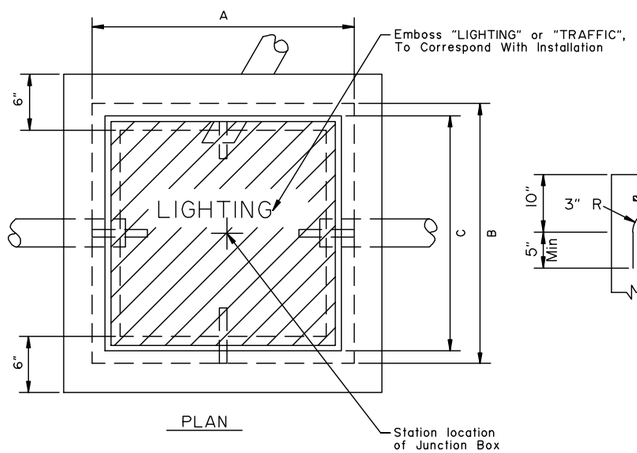


PLAN

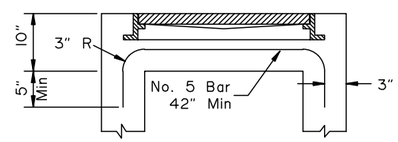


SECTION B-B

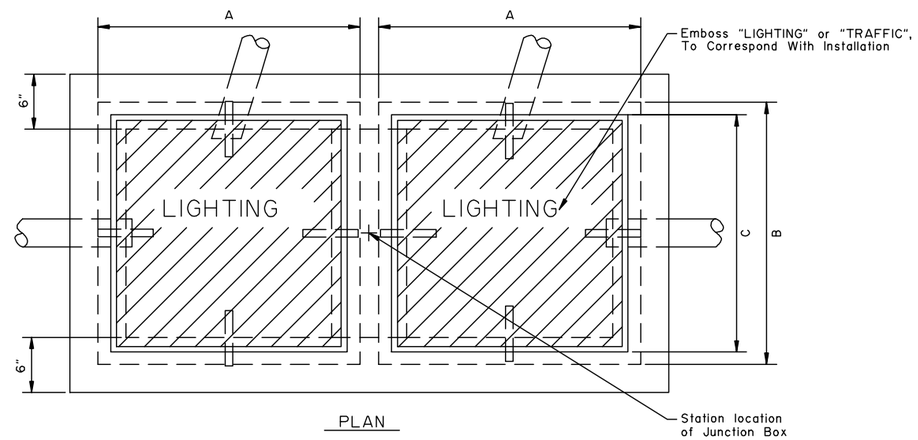


PLAN

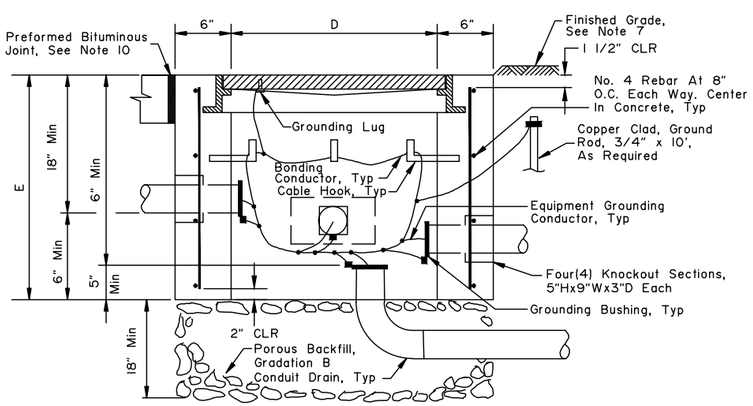


ELEVATION

TYPE II JUNCTION BOX

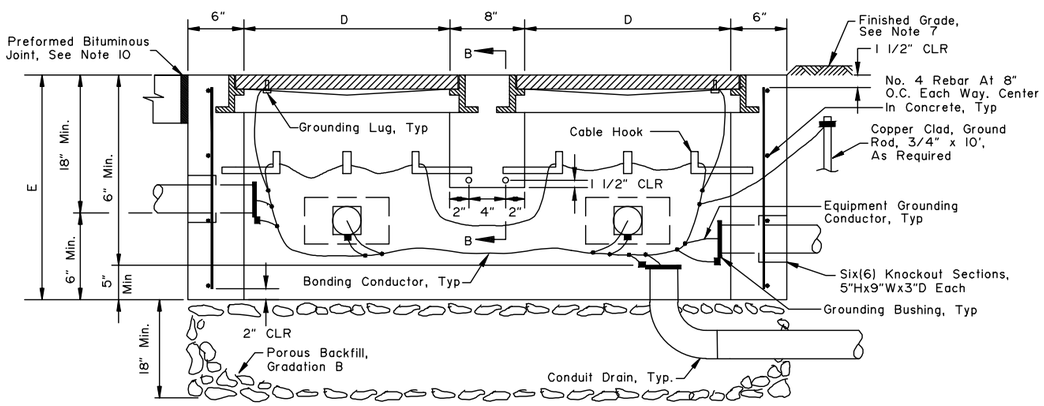


ELEVATION

TYPE III & IV JUNCTION BOX

## GENERAL NOTES:

1. See Alaska DOT&PF Standard Specifications for Highway Construction and Standard Plan Development Report (SPDR) for additional requirements.
2. Construct junction boxes using grade 60 reinforcing steel conforming to ASTM A615 and Class A concrete conforming to section 501 of the specifications.
3. Provide knockouts indicated in Type IA junction box when installed for loop detection. Conduit for loop detectors to enter junction box through knockouts.
4. Covers for junction boxes shall be cast iron. Type I & IA shall be secured to junction box with a minimum of two bolts and be rated ANSI/SCTE 77, Tier 8, minimum. Type II, Type III & Type IV cover shall weigh over 100 pounds and be ANSI/SCTE77, AASHTO H-20 traffic rated.
5. The minimum required bearing capacity for Type I shall be 6,800psf, for Type IA shall be 5,100psf, for Type II shall be 3,500psf, for Type III shall be 2,300psf, and for Type IV shall be 2,000psf.
6. See section 703-2.10 of the specifications for stone drain material requirements.
7. See section 660-3.04 of the specifications for top of junction box placement to finished grade requirements.
8. Provide conduits as required, size and quantity indicated in plans.
9. Provide grout around conduits in knockouts and for unused knockouts.
10. Provide a 1/2" thick preformed bituminous joint material around junction boxes installed in concrete walkways.
11. Metal conduits and junction box covers shall be bonded together to be electrically continuous using No. 8 AWG minimum copper bonding conductor. Cover shall be bonded using a tinned copper braided bonding jumper.

State of Alaska DOT&PF
ALASKA STANDARD PLAN

JUNCTION BOXES FOR ELECTROLIER & TRAFFIC SIGNALS

Adopted as an Alaska Standard Plan by: Carolyn Morehouse
Carolyn Morehouse, P.E.
Chief Engineer

Adoption Date: 7/17/2020

Last Code and Stds. Review
By: CNH Date: 7/15/2020

Next Code and Standards Review date: 7/15/2030

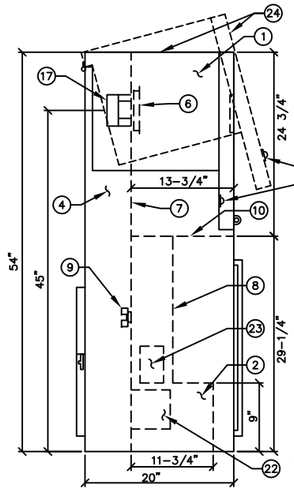


LEFT VIEW

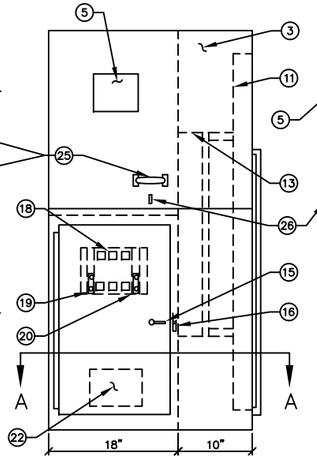


FRONT VIEW

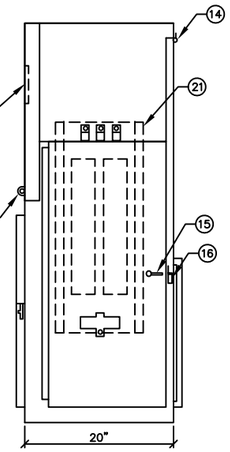


RIGHT VIEW

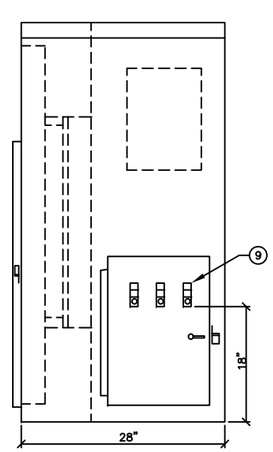


REAR VIEW

EQUIPMENT LEGEND

1. METER SECTION
2. LOAD SECTION (MAIN)
3. LOAD SECTION (DISTRIBUTION)
4. SERVICE PULL SECTION
5. METER READING WINDOW
6. METER SOCKET COVER
7. TEST SECTION COVER
8. DEAD FRONT
9. UTILITY LANDING LUGS
10. METER SECTION BARRIER
11. PANEL BOARD DEADFRONT
12. EQUIPMENT CHASSIS
13. MOUNTING PAN
14. STAINLESS STEEL PIN HINGE
15. COIN LATCH
16. HASP FOR PADLOCK
17. METER SOCKET KIT ASSEMBLY
18. MAIN BREAKER(S)
19. NEUTRAL BAR
20. GROUND BAR
21. PANEL BOARD INTERIOR
22. ALTERNATE CONTACTOR LOCATION
23. CABLE OPENING
24. HINGED HOOD
25. HOOD HANDLE
26. SEALABLE PADLOCK HASP

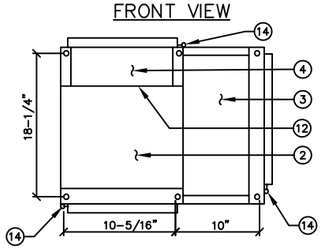


SECTION A–A

TYPE 1 LOAD CENTER CABINET SECTION / ELEVATION

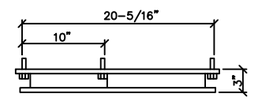


MOUNTING BASE

NOTE: DIMS. ARE APPROXIMATE AND MAY VARY. ENSURE 2" MIN CLEARANCE BETWEEN EDGES OF ANCHOR BOLTS AND CHAMFER EDGES.

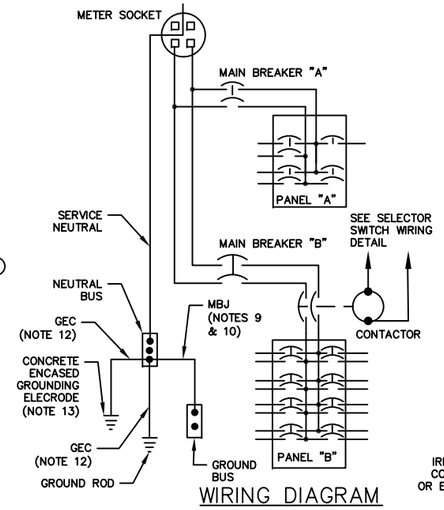


WIRING DIAGRAM

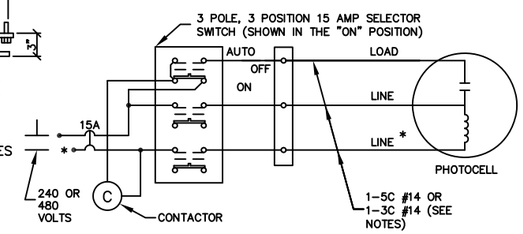


SELECTOR SWITCH WIRING DETAIL

* GROUNDED NEUTRAL, IF SERVICE IS 240/480 VOLT SINGLE PHASE OR 277/480 VOLT THREE-PHASE; AND UNGROUNDED LINE, IF SERVICE IS 120/240 VOLT SINGLE PHASE.

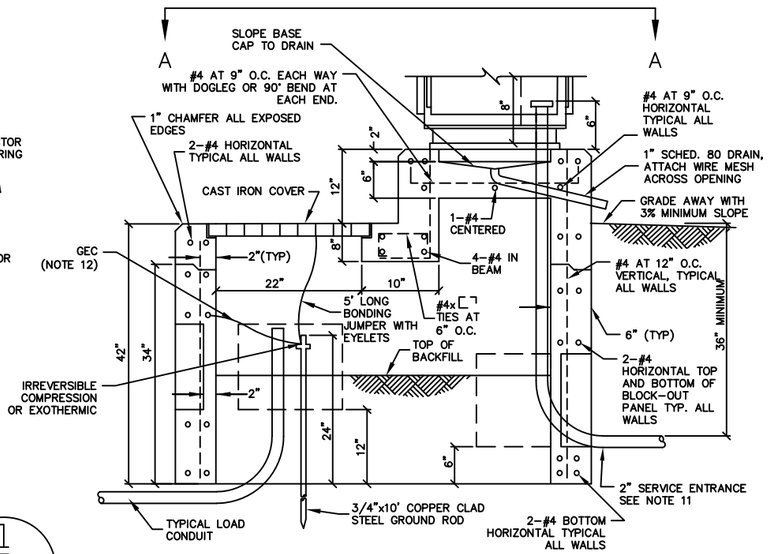


SECTION B–B

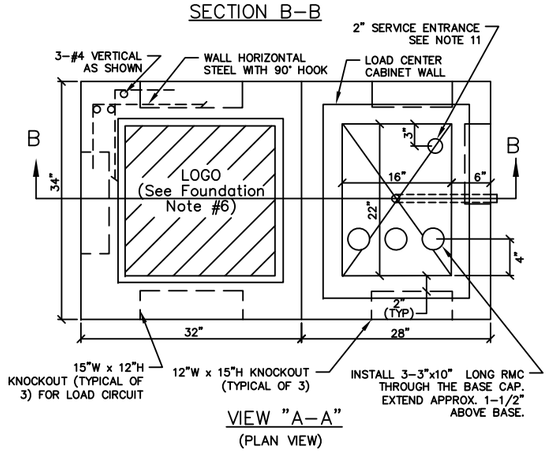


VIEW "A–A"
(PLAN VIEW)

TYPE 1 LOAD CENTER BASE

NOTE: STOP HORIZONTAL AND VERTICAL STEEL AT BLOCK-OUT PANELS & OPTIONAL JOINT USING 90° BEND. INSTALL 2 EXTRA #4 HORIZONTAL AND VERTICAL BARS ON ALL SIDES OF EACH KNOCKOUT.

## FOUNDATION NOTES:

1. INSTALL THE SURFACE WITH CAST IRON COVER FLUSH WITH THE PAVEMENT, SIDEWALK, OR FINISHED GRADE. GRADE AWAY FROM THE BASE WITH A MINIMUM SLOPE OF 3%. USE A PRE-MOULDED BITUMINOUS JOINT BETWEEN THE BASE AND CONCRETE SIDEWALK OR PAVING.
2. WHEN INSTALLING THE BASE, EXCAVATE TO 60" BELOW FINISHED GRADE AND INSTALL A DRAIN CONSISTING OF 18" OF COARSE CONCRETE AGGREGATE APPROVED BY THE ENGINEER. BACKFILL AROUND THE BASE IN 6" LIFTS WITH SELECTED MATERIAL TYPE "A".
3. BACKFILL INSIDE THE FOUNDATION TO WITHIN 24" OF THE LID AFTER ALL CONDUITS ARE INSTALLED, USING COARSE AGGREGATE. TERMINATE THE ENDS OF ALL LOAD CONDUITS A MINIMUM OF 6" ABOVE THE COARSE CONCRETE AGGREGATE BACKFILL AND A MINIMUM OF 12" BELOW THE LID.
4. PROVIDE ANCHOR BOLTS OR EXPANSION ANCHORS IN THE BASE FOR MOUNTING THE CABINET PER THE MANUFACTURER'S SHOP DRAWINGS. ANCHOR BOLTS, NUTS, AND WASHERS SHALL CONFORM TO EITHER ASTM A307 OR A449 AND SHALL BE GALVANIZED IN ACCORDANCE WITH ASTM A153.
5. USE GRADE 60 REINFORCING STEEL CONFORMING TO ASTM 615 AND CLASS "A" CONCRETE CONFORMING TO SECTION 501 OF THE SPECIFICATIONS WHEN CASTING THE BASE.
6. FINISH THE BASE ACCESS OPENING WITH A 24" SQUARE IRON FRAME AND COVER WITH PICK HOLE FOR REMOVAL, WEIGHING APPROXIMATELY 280 LBS. PROVIDE COVERS INSCRIBED WITH THE LEGEND "LIGHTING" FOR THOSE LOAD CENTERS WITH STREET LIGHTING CIRCUITS ONLY, AND "TRAFFIC" FOR THOSE LOAD CENTERS WITH A TRAFFIC SIGNAL CIRCUIT.
7. IF THE BASE IS PRECAST, INSTALL TWO 3/4" FERRULE LOOP INSERTS IN TWO SIDES OPPOSITE ONE ANOTHER FOR LIFTING.

## NOTES:

1. FURNISH ALL EQUIPMENT NOTED IN THE LOAD CENTER SUMMARY(IES) IN THE PLANS, PLUS TWO 20-AMP 2-POLE SPARE CIRCUIT BREAKERS, AND SPACE FOR A MINIMUM OF TWO ADDITIONAL 2-POLE CIRCUIT BREAKERS IN EACH LOAD PANEL. SEE THE LOAD CENTER SUMMARIES FOR LOAD PANEL VOLTAGES, CURRENT RATINGS, SHORT CIRCUIT INTERRUPTING RATINGS, AND THE NAME OF THE SERVING UTILITY.
2. INSTALL GROUNDING HUBS THIRD PARTY CERTIFIED FOR WET LOCATIONS, WHEN ATTACHING CONDUITS TO THE LOAD CENTER ENCLOSURE.
3. LABEL ALL CIRCUIT BREAKERS AS TO FUNCTION AND POSITION. LABEL THE SELECTOR SWITCH "LIGHTING" AND ITS POSITIONS "ON-OFF-AUTO".
4. INSTALL THE PHOTOELECTRIC CONTROL UNIT ON A 3/4", OR LARGER, CONDUIT. LOCATE THE UNIT 18"-24" ABOVE THE TOP OF THE LOAD CENTER. ORIENT THE CONTROL WINDOW FACING NORTH AND/OR AWAY FROM ARTIFICIAL LIGHT SOURCES THAT MAY INTERFERE WITH AMBIENT LIGHT CONTROL. INSTALL A 3C#14 CABLE FROM THE LOAD CENTER TO THE CONDUIT BODY WHERE THE CONNECTION TO THE PHOTOCELL RECEPTACLE CABLE SHALL BE MADE. IF PLANS CALL TO MOUNT PHOTOCELL AWAY FROM LOAD CENTER USE A 5C#14 CABLE FROM LOAD CENTER TO RECEPTACLE. PHOTOCELL MUST BE ENCLOSED IN A METALLIC ENCLOSURE.
5. METER BASES SHALL NOT BE MOUNTED ON MOVABLE PANELS OR DOORS.
6. LOCATE THE LOAD CENTER AS SHOWN ON THE PLANS.
7. STORE A SCHEMATIC DIAGRAM, A CIRCUIT DIRECTORY, AND A MATERIALS LIST THAT INCLUDES THE MANUFACTURER'S NAME AND PART/CATALOG NUMBERS, ALL LAMINATED IN PLASTIC, IN A METAL POCKET ATTACHED TO THE INSIDE OF THE LOAD CENTER. INSTALL THE POCKET ON THE LOAD CENTER DOOR, PROVIDING DRAIN HOLES TO PREVENT WATER ACCUMULATION.
8. MAXIMUM METER HEIGHT SHALL NOT EXCEED 64" FROM CAST IRON COVER TO CENTER OF THE METER SOCKET COVER.
9. INSTALL #6 AWG COPPER MAIN BONDING JUMPER, OR SIZE PER NEC TABLE 250.102 (C)(1), WHICHEVER IS LARGER.
10. INSTALLATION MUST COMPLY WITH THE NEC 250.24 (C) AND 250.24 (C) EXCEPTION WHEN MORE THAN ONE PANELBOARD IS PRESENT.

## NOTES (CONTINUED):

11. THE LENGTH AND TYPE OF SERVICE ENTRANCE CONDUIT INSTALLED BY THE CONTRACTOR VARIES BY UTILITY. REGARDLESS OF ITS LENGTH, INSTALL A PULL ROPE IN THE SERVICE CONDUIT AND A CAP ON THE BURIED END: MARK THE BURIED END WITH A 2"X 6" WOOD STAKE. SEE THE LOAD CENTER SUMMARIES FOR THE FOLLOWING INFORMATION.
    A. STATION AND OFFSET OF THE LOAD CENTER AND POWER SOURCE.
    B. WHERE THE CONTRACTOR TERMINATES THE SERVICE ENTRANCE CONDUIT.
    C. THE TYPE OF SERVICE ENTRANCE CONDUIT (SUCH AS RIGID METAL CONDUIT OR LIQUID-TIGHT FLEXIBLE METAL CONDUIT).
12. INSTALL #6 AWG COPPER GROUNDING ELECTRODE CONDUCTOR (GEC), OR SIZE PER NEC TABLE 250.66, WHICHEVER IS LARGER.
13. THE REINFORCING BARS WITHIN THE CONCRETE PAD MUST BE CONNECTED TOGETHER BY EFFECTIVE MEANS AND WILL BECOME PART OF THE GROUNDING ELECTRODE SYSTEM PER NEC 250.50 AND 250.52(A)(3). INSTALL AN IRREVERSIBLE COMPRESSION GROUNDING CONNECTOR, NRTL-LISTED FOR DIRECT BURIAL IN EARTH AND CONCRETE, TO CONNECT THE REINFORCING BARS TO THE GEC. INSTALL A BARE COPPER GEC, SIZED PER NEC 250.66 BUT NOT SMALLER THAN #6 AWG, BETWEEN THE COMPRESSION CONNECTOR AND THE LOAD CENTER NEUTRAL.
14. INSTALL LABEL(S) ON ENCLOSURE EXTERIOR PER ARC FLASH AND SHOCK HAZARD LABELING DETAIL:
    A. TO WARN OF THE POTENTIAL ARC FLASH HAZARD [PER NEC 110.16 AND NFPA 70E], AND
    B. TO IDENTIFY THE AVAILABLE FAULT CURRENT [PER NEC 110.24(A)].
15. WHEN SHOWN IN THE PLANS, INSTALL ENCLOSURE HEATER WITH INTEGRAL THERMOSTAT, SET TO ENERGIZE THE HEATER AT TEMPERATURES AT OR BELOW 32-DEG F. SCHNEIDER ELECTRIC CAT. NO. NSYCRP1W230VTVC, NVENT-HOFFMAN CAT. NO. DAH4002B, OR APPROVED EQUAL.
16. BOND SERVICE CONDUIT GROUNDING BUSHING TO SUPPLY-SIDE BONDING JUMPER. BOND LOAD CONDUIT GROUNDING BUSHINGS TO ASSOCIATED EQUIPMENT GROUNDING CONDUCTORS (EGC'S).

State of Alaska DOT&PF
ALASKA STANDARD PLAN

**TYPE 1 LOAD CENTER**

Adopted as an Alaska Standard Plan by: Carolyn Morehouse
Carolyn Morehouse, P.E.
Chief Engineer

Adoption Date: 07/17/2020

Last Code and Stds. Review
By: JC Date: 07/17/2020

Next Code and Standards Review date: 07/17/2030

EQUIPMENT LEGEND/DESCRIPTION

1. METERING SECTION
2. LOAD SECTION
3. UTILITY CONNECTION AND TEST BLOCK SECTION
4. METER READING WINDOW (8"X8")
5. METER SOCKET W/BYPASS & SAFETY SOCKET
6. LIFT AWAY METER SECTION COVER
7. DEADFRONT
8. STAINLESS STEEL PIN HINGE
9. PADLOCKING PROVISIONS
10. DISTRIBUTION PANEL
11. MAIN CIRCUIT BREAKER
12. ACCESSORY EQUIPMENT MOUNTING AREA FOR CONTACTOR, SELECTOR SWITCHES, TERMINAL STRIPS, AND SO ON.
13. SERVICE PULL SECTION
14. SELECTOR SWITCH
15. ENCLOSURE HEATER

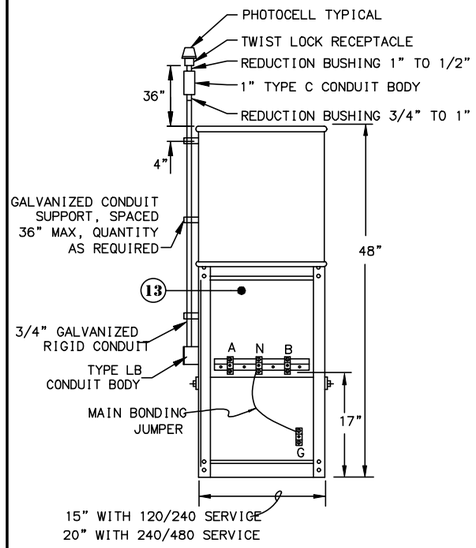


REAR VIEW
(W/ DOOR REMOVED)

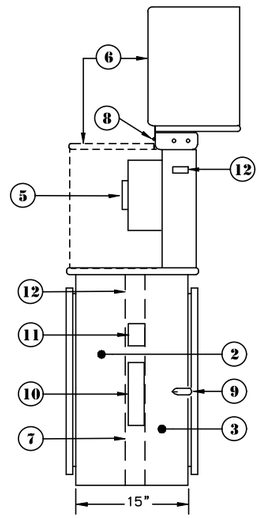


RIGHT SIDE VIEW
(W/ METER SECTION OPEN)

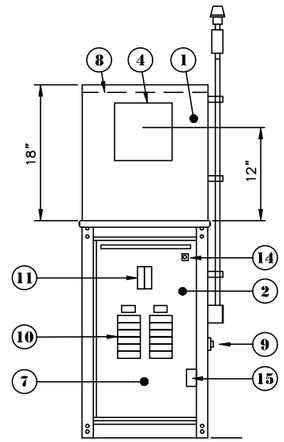


FRONT VIEW
(W/ DOOR REMOVED)

**TYPE 1A CABINET DETAILS**

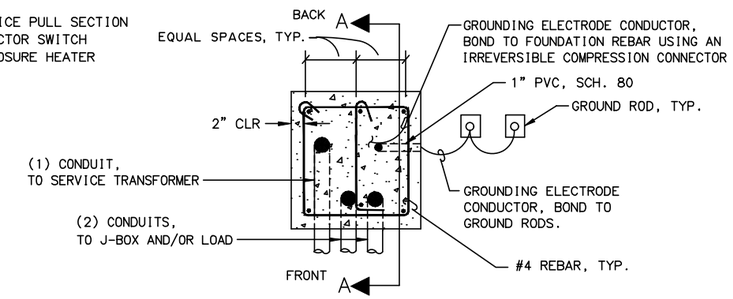


TOP VIEW

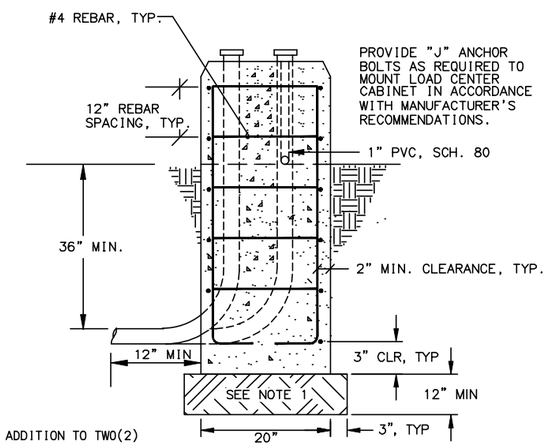


SECTION A–A

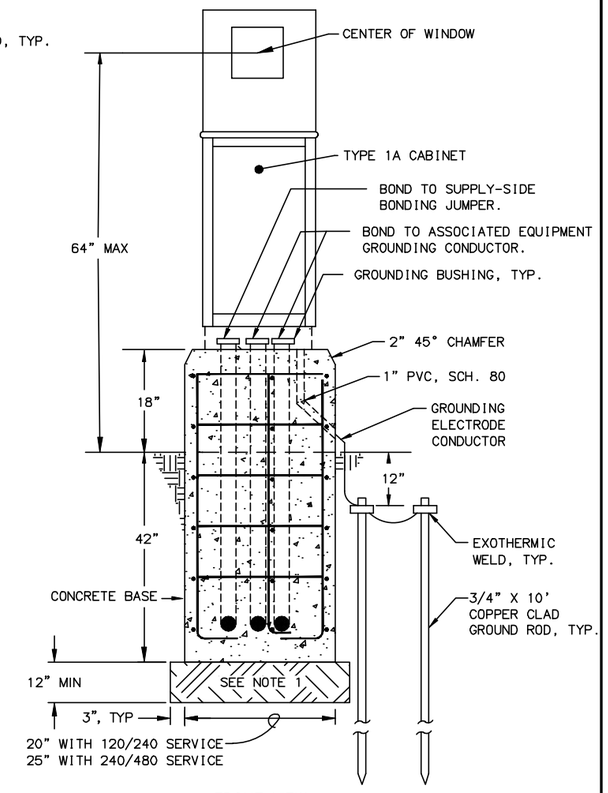


FRONT VIEW

**TYPE 1A LOAD CENTER BASE DETAILS**

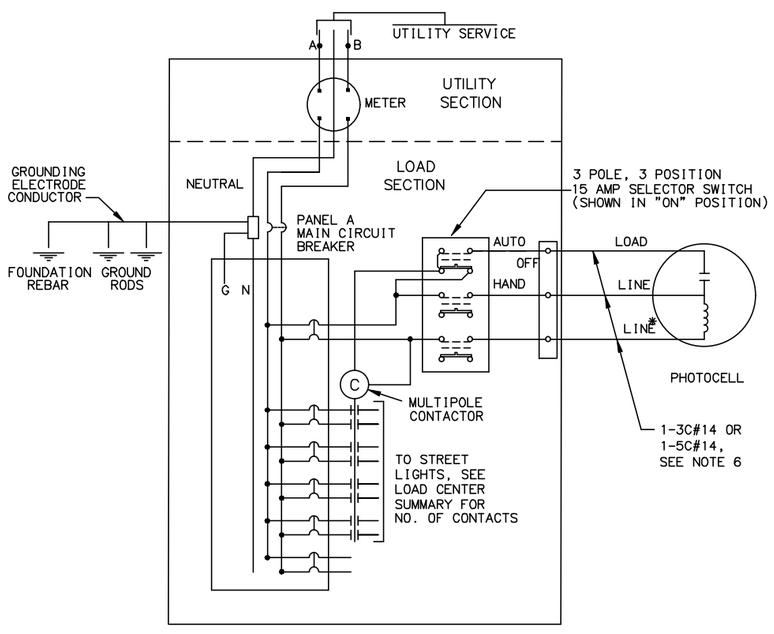


LOAD CENTER ONE LINE DIAGRAM AND SELECTOR SWITCH WIRING

* GROUNDED NEUTRAL, IF SERVICE IS 240/480 VOLT SINGLE PHASE OR 277/480 VOLT THREE-PHASE; AND UNGROUNDED LINE, IF SERVICE IS 120/240 VOLT SINGLE PHASE.

## WIRING NOTES:

1. FURNISH ALL EQUIPMENT NOTED IN THE LOAD CENTER SUMMARY, IN ADDITION TO TWO(2) 20-AMP, 2-POLE SPARE CIRCUIT BREAKERS, AND A MINIMUM OF TWO(2) SPACES FOR 2-POLE CIRCUIT BREAKERS IN EACH LOAD PANEL. SEE THE LOAD CENTER SUMMARIES FOR ADDITIONAL INFORMATION.
2. METER BASES SHALL NOT BE MOUNTED ON MOVABLE PANELS OR DOORS.
3. MAIN CIRCUIT BREAKER SHALL BE INDIVIDUALLY MOUNTED ABOVE DISTRIBUTION PANEL BUS.
4. LABEL ALL CIRCUIT BREAKERS AS TO FUNCTION AND POSITION. LABEL THE SELECTOR SWITCH "LIGHTING" AND ITS POSITIONS "ON-OFF-AUTO".
5. STORE A SCHEMATIC DIAGRAM, A CIRCUIT DIRECTORY, AND A MATERIALS LIST THAT INCLUDES THE MANUFACTURER'S NAME AND PART/CATALOG NUMBERS, ALL LAMINATED IN PLASTIC, IN A METAL POCKET ATTACHED TO THE INSIDE OF THE LOAD CENTER. INSTALL THE POCKET ON THE LOAD CENTER DOOR, PROVIDING DRAIN HOLES TO PREVENT WATER ACCUMULATION.
6. INSTALL PHOTOCELL TO AVOID HINGED COVER IN ALL POSITIONS AND ORIENT FACING NORTH SKY AND/OR AWAY FROM ARTIFICIAL LIGHT SOURCES THAT MAY INTERFERE WITH CONTROL. IF PLANS CALL TO MOUNT PHOTOCELL AWAY FROM LOAD CENTER, USE 5C#14 CABLE FROM LOAD CENTER TO PHOTOCELL TWIST LOCK RECEPTACLE.
7. SEE DESIGN PLANS AND LOAD CENTER SUMMARIES FOR ADDITIONAL INFORMATION INCLUDING EQUIPMENT LOCATIONS, CONDUCTOR AND CONDUIT REQUIREMENTS. INSTALL PULL LINE IN SERVICE LATERAL AND CAP BOTH ENDS OF CONDUIT. COORDINATE WITH LOCAL ELECTRICAL UTILITY PROVIDER FOR SERVICE REQUIREMENTS.
8. CONDUITS SHALL BE ATTACHED TO LOAD CENTER ENCLOSURE USING A LISTED, GROUNDING TYPE, THREADED CONDUIT HUB.
9. PROVIDE ARC-FLASH HAZARD WARNING LABEL COMPLYING WITH NFPA 70E ON THE ENCLOSURE EXTERIOR.
10. PROVIDE ENCLOSURE HEATER WHEN INDICATED IN PLANS. INSTALL ENCLOSURE HEATER IN SPACE CONTAINING PANELBOARD BUSSING AND LIGHTING CONTACTORS. HEATER TO BE THERMOSTATICALLY CONTROLLED AND HEAT OUTPUT TO BE SIZED ACCORDING TO COMPARTMENT DIMENSIONS. POWER FROM DEDICATED CIRCUIT AND SIZE CIRCUIT BREAKER TO MANUFACTURES RECOMMENDATION.
11. WHEN METAL HALIDE OR MERCURY VAPOR LAMPED FIXTURES ARE USED, PROVIDE A REMOTE BULB THERMOSTAT, SO THAT THE CONTACT CLOSES AND THE LIGHTS TURN ON WHEN THE TEMPERATURE DROPS TO 15° FAHRENHEIT. WIRE THERMOSTAT SO THAT ITS CONTACT IS PARALLEL THE CONTACT IN THE PHOTOELECTRIC CELL.

## GENERAL NOTES:

1. SEE ALASKA DOT&PF STANDARD SPECIFICATIONS FOR HIGHWAY CONSTRUCTION AND STANDARD PLAN DEVELOPMENT REPORT (SPDR) FOR ADDITIONAL REQUIREMENTS.

## LOAD CENTER BASE NOTES:

1. PROVIDE COMPACTED, NON-FROST SUSCEPTIBLE BACKFILL. MINIMUM REQUIRED BEARING CAPACITY SHALL BE 2000 PSF.
2. CONSTRUCT BASE USING GRADE 60 REINFORCING STEEL CONFORMING TO ASTM A615 AND CLASS A CONCRETE CONFORMING TO SECTION 501 OF THE SPECIFICATIONS.
3. IF THE BASE IS PRECAST, INSTALL TWO 3/4" FERRULE LOOP INSERTS IN TWO SIDES OPPOSITE ONE ANOTHER FOR LIFTING.
4. ALL BASE REBAR TO BE BONDED TOGETHER TO BE ELECTRICALLY CONTINUOUS.
5. PROVIDE ANCHOR BOLTS OR EXPANSION ANCHORS IN THE BASE FOR MOUNTING THE CABINET PER THE MANUFACTURER'S SHOP DRAWINGS. ANCHOR BOLTS, NUTS, AND WASHERS SHALL CONFORM TO EITHER ASTM OR A449 AND SHALL BE GALVANIZED IN ACCORDANCE WITH ASTM A153. A307 CLEARANCE BETWEEN EDGE OF ANCHOR AND BEGINNING OF CHAMFERED EDGE TO BE A MINIMUM OF 2".
6. GRADE AWAY FROM THE BASE WITH A MINIMUM SLOPE OF 3%. USE A PRE-MOULDED BITUMINOUS JOINT BETWEEN THE BASE AND CONCRETE SIDEWALK OR PAVING, WHEN ADJACENT TO A SIDEWALK OR PATHWAY.

State of Alaska DOT&PF
ALASKA STANDARD PLAN

**TYPE 1A LOAD CENTER**

Adopted as an Alaska Standard Plan by: Carolyn Morehouse
Carolyn Morehouse, P.E.
Chief Engineer

Adoption Date: 7/17/2020

Last Code and Stds. Review
By: CNH Date: 7/8/2020
Next Code and Standards Review date: 7/8/2030

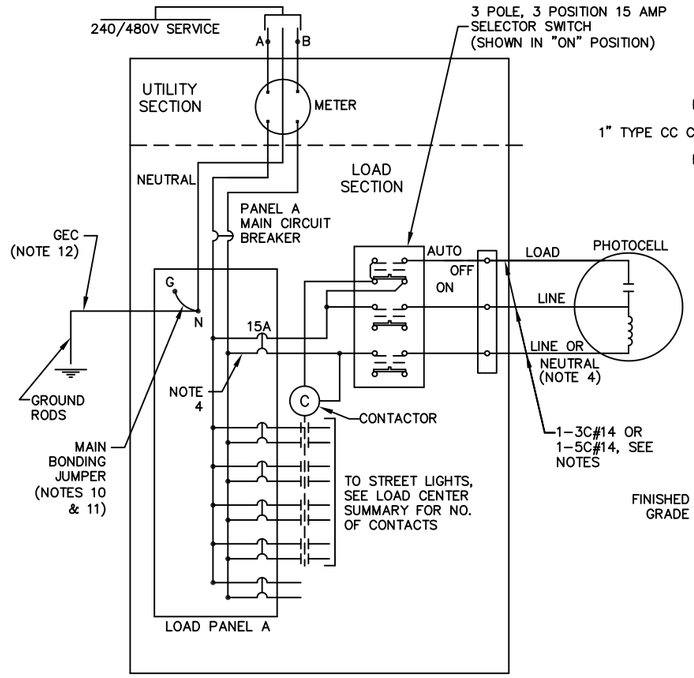


LOAD CENTER ONE LINE DIAGRAM AND SELECTOR SWITCH WIRING

TYPICAL PHOTO CELL INSTALLATION

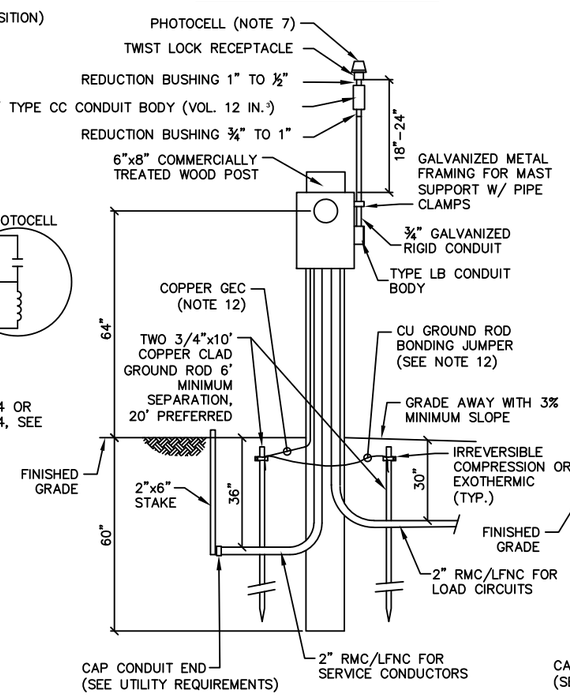


TYPE 2 LOAD CENTER
SINGLE POST – STANDARD

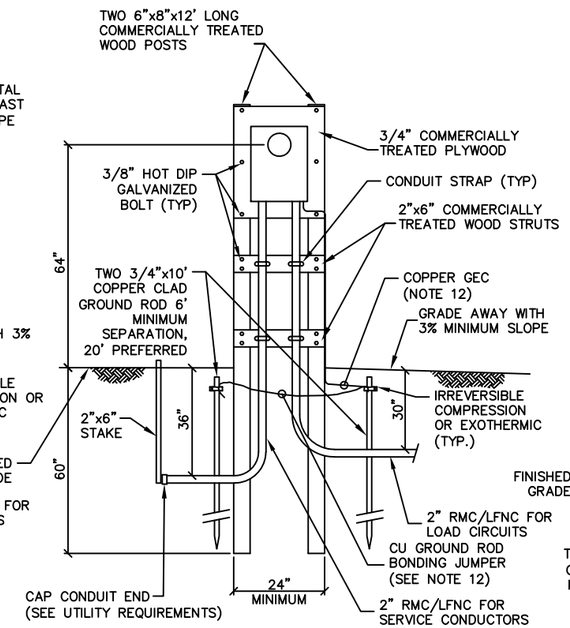


TYPE 2 LOAD CENTER
DUAL POST – ALTERNATE

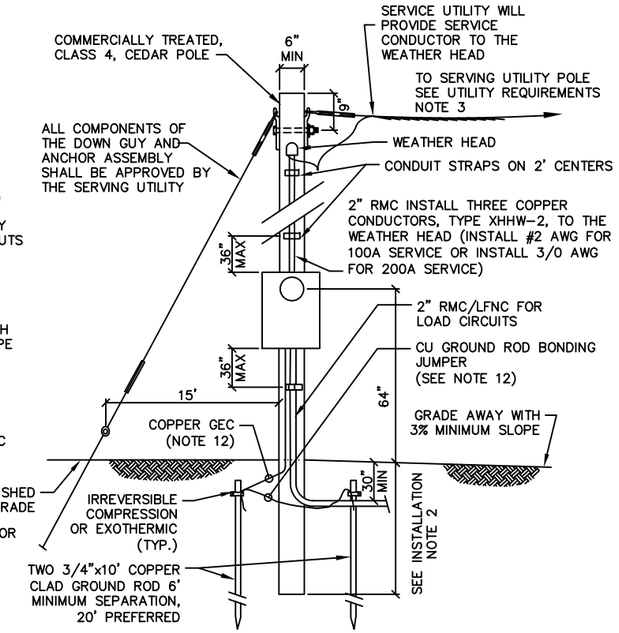


TYPE 3 LOAD CENTER

## WIRING NOTES:

1. FURNISH ALL EQUIPMENT NOTED IN THE LOAD CENTER SUMMARY, PLUS TWO 20-AMP 2-POLE SPARE CIRCUIT BREAKERS, AND SPACE FOR A MINIMUM OF TWO ADDITIONAL TWO-POLE CIRCUIT BREAKERS, IN EACH LOAD PANEL. SEE SUMMARIES FOR LOAD PANEL VOLTAGES, CURRENT RATINGS, SHORT CIRCUIT INTERRUPTING RATINGS, AND THE NAME OF THE SERVING UTILITY.
2. SIZE THE TYPE 2 AND 3 LOAD CENTER CABINETS TO HOLD THE EQUIPMENT SHOWN IN THE WIRING DIAGRAM AND DETAILED IN EACH LOAD CENTER SUMMARY, ALLOWING SPACE FOR WIRING PER THE NATIONAL ELECTRICAL CODE. INSTALLING A METER BASE AND MAIN BREAKER IN A SEPARATE ENCLOSURE IS ALLOWABLE. HOWEVER IN THIS CASE, FURNISH A BREAKER PANEL WITH A MAIN BREAKER.
3. LABEL THE SELECTOR SWITCH "LIGHTING" AND ITS POSITIONS "ON-OFF-AUTO".
4. THE VOLTAGE FOR THE PHOTOELECTRIC CONTROL EQUIPMENT SHALL BE 240-VOLT, DERIVED FROM THE SERVICE VOLTAGE, OR FROM A CONTROL TRANSFORMER. PROVIDE 1-POLE CIRCUIT BREAKER ON 240/480V LOAD CENTER AND 2-POLE CIRCUIT BREAKER ON 120/240V LOAD CENTERS.
5. INSTALL GROUNDING HUBS THIRD PARTY CERTIFIED FOR WET LOCATIONS WHEN ATTACHING CONDUITS TO THE LOAD CENTER ENCLOSURE.
6. LABEL ALL CIRCUIT BREAKERS AS TO FUNCTION AND POSITION.
7. INSTALL THE PHOTOELECTRIC CONTROL UNIT ON A 3/4" OR LARGER CONDUIT. LOCATE THE UNIT 18"-24" ABOVE THE TOP OF THE LOAD CENTER. ORIENT THE CONTROL WINDOW FACING NORTH AND/OR AWAY FROM ARTIFICIAL LIGHT SOURCES THAT MAY INTERFERE WITH AMBIENT LIGHT CONTROL. INSTALL A 3C#14 CABLE FROM THE LOAD CENTER TO THE TYPE CC CONDUIT BODY WHERE THE SPLICE TO THE PHOTOCELL RECEPTACLE CABLE SHALL BE MADE. IF PLANS CALL TO MOUNT PHOTOCELL AWAY FROM LOAD CENTER USE A 5C#14 CABLE FROM LOAD CENTER TO RECEPTACLE. PHOTOCELL MUST BE ENCLOSED IN A METALLIC ENCLOSURE.
8. STORE A SCHEMATIC DIAGRAM, A CIRCUIT DIRECTORY, AND A MATERIALS LIST INCLUDING THE MANUFACTURERS' NAMES AND PART/CATALOG NUMBERS, ALL LAMINATED IN PLASTIC, IN A METAL POCKET ATTACHED TO THE INSIDE OF THE LOAD CENTER. INSTALL THE POCKET ON THE LOAD CENTER DOOR, PROVIDING DRAIN HOLES TO PREVENT WATER ACCUMULATION.
9. WHEN METAL HALIDE OR MERCURY VAPOR LAMPED FIXTURES ARE USED, PROVIDE A REMOTE BULB THERMOSTAT, SO THAT THE CONTACT CLOSES AND THE LIGHTS TURN ON WHEN THE TEMPERATURE DROPS TO 15°F. WIRE THERMOSTAT SO THAT ITS CONTACT IS PARALLEL THE CONTACT IN THE PHOTOELECTRIC CELL.
10. INSTALL #6 AWG COPPER MAIN BONDING JUMPER, OR SIZE PER NEC TABLE 250.102 (C)(1), WHICHEVER IS LARGER.
11. INSTALLATION MUST COMPLY WITH NEC 250.24(C) AND 250.24 (C) EXCEPTION WHEN MORE THAN ONE PANELBOARD IS PRESENT.
12. INSTALL #6 AWG COPPER GROUNDING ELECTRODE CONDUCTOR (GEC), OR SIZE PER NEC TABLE 250.66, WHICHEVER IS LARGER. USE THE SAME METHOD TO SIZE GROUND ROD BONDING JUMPER.
13. MAXIMUM METER HEIGHT SHALL NOT EXCEED 64" FROM FINISHED GRADE TO CENTER OF THE METER SOCKET COVER.
14. WHEN SHOWN ON THE PLANS, INSTALL ENCLOSURE HEATER WITH INTEGRAL THERMOSTAT, SET TO ENERGIZE THE HEATER AT TEMPERATURES AT OR BELOW 32-DEG F. SCHNEIDER ELECTRIC CAT. NO. NSYCRP1W230VTVC, NVENT-HOFFMAN CAT. NO. DAH4002B, OR APPROVED EQUAL.
15. BOND SERVICE CONDUIT GROUNDING BUSHING TO SUPPLY-SIDE BONDING JUMPER. BOND LOAD CONDUIT GROUNDING BUSHINGS TO ASSOCIATED EQUIPMENT GROUNDING CONDUCTORS (EGC'S).

## INSTALLATION NOTES:

1. INSTALL TYPE 3 LOAD CENTER POLES OF SUFFICIENT LENGTH TO PROVIDE THE FOLLOWING MINIMUM GROUND TO SERVICE CONDUCTOR CLEARANCE:
   A. 18.5 FEET, IF THE SERVICE CONDUCTORS ARE LOCATED ABOVE ROADWAYS OR PARKING AREAS.
   B. 26.5 FEET, IF THE SERVICE CONDUCTORS ARE LOCATED WITHIN 20 FEET OF A RAILROAD TRACK.
   C. 18.5 FEET IN ALL OTHER CIRCUMSTANCES.
2. SET THE BUTT END OF TYPE 3 LOAD CENTER POLES TO THE FOLLOWING MINIMUM DEPTH:
   A. 10 PERCENT OF ITS LENGTH PLUS 24 INCHES, OR 60 INCHES, WHICHEVER IS GREATER, IF IT IS INSTALLED IN EARTH OTHER THAN SOLID ROCK OR MUSKEG.
   B. 10 PERCENT OF ITS LENGTH, OR 48 INCHES, WHICHEVER IS GREATER, IF IT IS INSTALLED IN SOLID ROCK.
   C. CONSIDER MUSKEG TO BE AIR, AND SET THE BUTT ENDS TO THE DEPTH GIVEN IN A OR B, WHICHEVER APPLIES, IN THE UNDERLYING EARTH OR ROCK.

   WHENEVER MORE THAN 24 INCHES OF EARTH OVERLAYS ROCK, OR THE DIAMETER OF THE DRILLED HOLE IN ROCK EXCEEDS TWICE THE DIAMETER OF THE POLE AT THE GROUND LINE, CONSIDER THE INSTALLATION AS EARTH.
3. ATTACH ALL CONDUITS TO THE POSTS AND POLES USING TWO HOLE RIGID METAL CONDUIT STRAPS LOCATED ON 24 INCHES MAXIMUM CENTERS.
4. ATTACH ALL GROUND CONDUCTORS TO THE POSTS AND POLES USING CABLE STAPLES LOCATED ON 12 INCH CENTERS. MAKE ALL GROUNDING CONDUCTORS CONTINUOUS. USE #6 AWG CU GEC FOR 100A SERVICE AND #4 AWG CU GEC FOR 200 AMP SERVICE.
5. ALL POSTS, POLES, AND STRUTS SHALL BE COMMERCIALLY TREATED AND SHALL MEET THE REQUIREMENTS SET FORTH IN ALASKA DOT&PF SSHC SECTIONS 713 & 714.
6. ALL ELECTRICAL ENCLOSURES SHALL FEATURE MEANS FOR SEALING AND LOCKING ALL DOORS AND ACCESS COVERS THAT MAY CONTAIN EXPOSED ENERGIZED ELECTRICAL PARTS.

## UTILITY REQUIREMENTS:

1. USE THE SINGLE-POST TYPE 2 "STANDARD" LOAD CENTER IN ALL LOCATIONS EXCEPT WHERE THE SERVING UTILITY REQUIRES THE TWO-POST TYPE 2 "ALTERNATIVE" LOAD CENTER. REFER TO THE LOAD CENTER SUMMARY FOR WHICH TO INSTALL.
2. THE LENGTH AND TYPE OF SERVICE ENTRANCE CONDUIT INSTALLED BY THE CONTRACTOR VARIES BY UTILITY. REGARDLESS OF ITS LENGTH, INSTALL A PULL ROPE IN THE SERVICE CONDUIT AND A CAP ON THE BURIED END: MARK THE BURIED END WITH A 2"x6" WOOD STAKE. SEE THE LOAD CENTER SUMMARIES FOR THE FOLLOWING INFORMATION.
   A. STATION AND OFFSET OF THE LOAD CENTER AND POWER SOURCE.
   B. WHERE THE CONTRACTOR TERMINATES THE SERVICE ENTRANCE CONDUIT.
   C. THE TYPE OF SERVICE ENTRANCE CONDUIT (SUCH AS RIGID METAL CONDUIT OR LIQUID-TIGHT FLEXIBLE METAL CONDUIT).
   D. THE MAXIMUM AND MINIMUM DISTANCES ALLOWED BETWEEN THE TYPE-3 LOAD CENTER POLE AND UTILITY POLE TO WHICH THE AERIAL DROP IS CONNECTED.
3. VERTICAL CLEARANCE FOR SERVICE-DROP CONDUCTORS IN ACCORDANCE WITH NEC 230.24(B).

State of Alaska DOT&PF
ALASKA STANDARD PLAN

TYPE 2 AND 3
LOAD CENTERS

Adopted as an Alaska Standard Plan by: Carolyn Morehouse
Carolyn Morehouse, P.E.
Chief Engineer

Adoption Date: 07/17/2020

Last Code and Stds. Review
By: JC Date: 07/17/2020

Next Code and Standards Review date: 07/17/2030

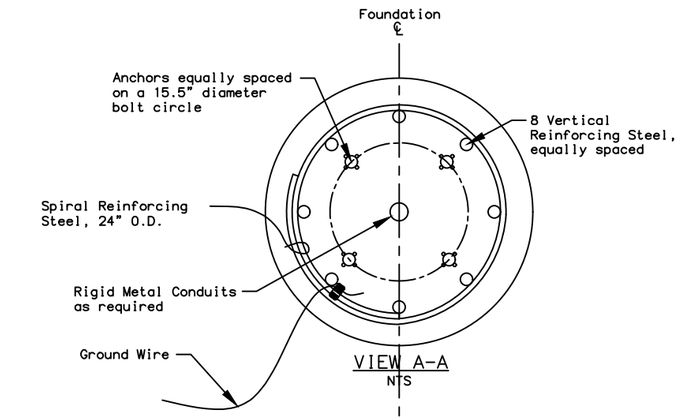


VIEW A-A
NTS

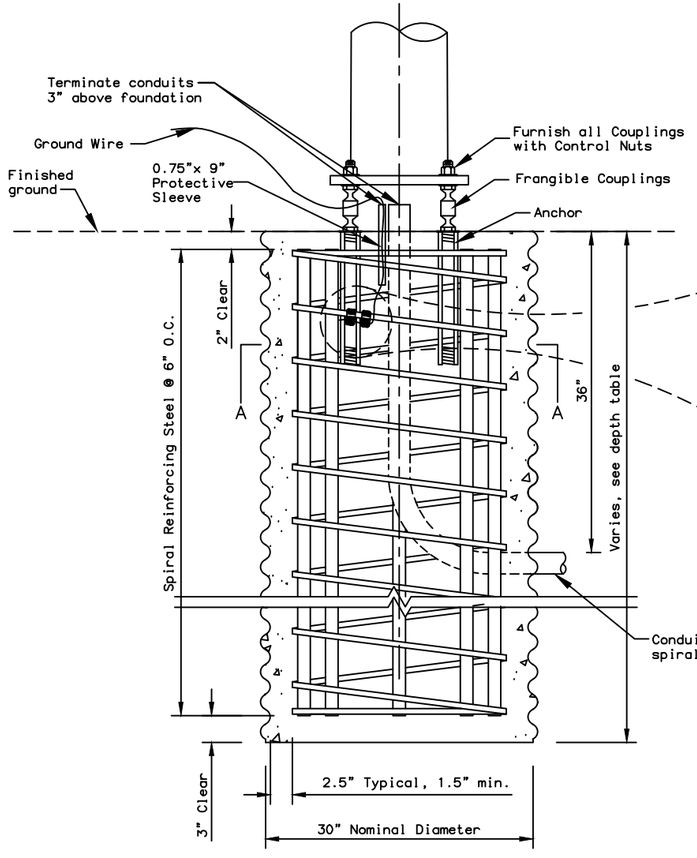


FOUNDATION DETAILS
(Skirt omitted for clarity)

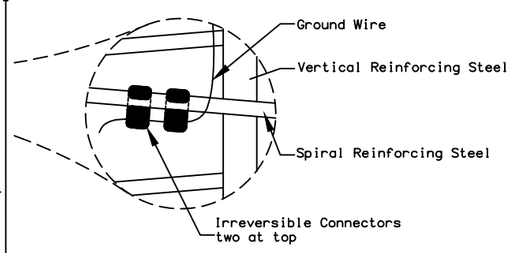


| MATERIAL REQUIREMENTS | | |
|---|---|---|
| Concrete | Class A | f'c = 4000 psi |
| CMP | AASHTO M218 | 14 ga. |
| Vertical Reinforcing Steel | AASHTO M31 #11 | GR 60 |
| Spiral Reinforcing Steel | AASHTO M31 #5 | GR 60 |
| Ground Wire | | #4 AWG |
| Frangible Coupling and anchor | NCHRP 350 TL3 (See note 11) | Vu = 5.5 kips<br>Tu = 43.2 kips |
| Conduit | Sch 40 | RMC |
| Protective Sleeve | Sch 40 | PVC |

| DEPTH TABLE | | |
|---|---|---|
| GRADE | FOUNDATION DEPTH BY APPLICATION (ft.) | |
| | ELECTROLIER * SEE NOTE 9 | BREAKAWAY TRAFFIC SIGNAL |
| Flat to 6:1 | 8 | 6.5 |
| >=6:1 to 3:1 | 9 | 7 |
| >=3:1 to 1.5:1 | 10 | 8 |

| CONTROLLED LOW STRENGTH MATERIAL MIX DESIGN | | |
|---|---|---|
| ITEM | BATCHING QUANTITIES PER CYD BATCH (lbs.) | APPLICABLE SPECS. |
| Portland Cement Concrete | 188 | 701-2.01 |
| Water (52.1 gal.) | 435 | 712-2.01 |
| Fine Aggregate SSD | 3041 | 703-2.01 |
| Admixture: MasterAir AE2000 | 2.0 oz. | 711-2.02 |
| Total | 3664 | |

## DESIGN NOTES:

Design Standard: 2013 Standard Specifications for Structural Supports for Highway Signs, Luminaires and Traffic Signals with 2019 interim.

Design Load: 1,000 lbs axial, 2,000 lbs shear, 50,000 ft-lbs moment.

## NOTES:

1. This foundation is approved for electrolier and breakaway traffic signal applications in cohesionless soils with an N1-60 value of 10 or greater per AASHTO T-206, "Standard Penetration Test" (SPT). This foundation shall not be used if any of the following are encountered; water table above the bottom of foundation, very loose soils, organic soils, cohesive soils (clay), or soils susceptible to frost jacking. If any of these conditions are encountered, stop foundation work and contact the Engineer.
2. Place foundation in drilled or excavated hole with centerline of foundation located at the station, offset, and elevation specified in plans. Set foundation to satisfy the conditions depicted in clearance detail.
3. Form the foundation in corrugated metal pipe conforming to Subsection 707-2.01 of the Specifications.
4. Provide 1.5 extra turns at each end of the spiral reinforcing steel. Reinforcing steel shall not be spliced. Tie vertical reinforcing steel to each intersection of the spiral reinforcing steel.
5. Connect ground wire near the top of spiral reinforcing steel with two irreversible connectors as shown. Fasten connectors according to the manufacturers' recommendations including the use of manufacturer specified tools. The ground wire may be bare solid, stranded, or braided copper. Protect ground wire with protective sleeve as shown and fill with silicon sealant.
6. Complete all concrete work in conformance with Sections 501, 503, and 660 of the Specifications. Use a tube or tremie with a hopper head or other approved device when dropping concrete more than 5 feet per Subsection 501-3.05. Vibrate concrete during placement by mechanical vibration per Subsection 501-3.06. Ensure anchor threads are protected from contact with concrete during pour.
7. Backfill and compact according to Section 205, and Subsections 203-3.04 and 660-3.01 of the Specifications. Use select material, Type A or controlled low strength material as backfill material. Ensure area below foundation meets compaction requirements and is free of loose material and debris prior to concrete work.
8. Install all anchors according to the manufacturer's written installation instructions. Anchors shall be installed plumb. Anchors greater than 1:40 out-of-plumb will result in foundation rejection.
9. When used for electrolier reduce the foundation depth 1 foot when there is no luminaire arm or the luminaire arm is less than or equal to 12 feet.
10. Grade in depth table refers to fill slopes. If foundation is in a cut slope assume flat grade in table. To determine grade in fill slopes, use the most severe grade found within an 8 foot radius of the center of the foundation.
11. The frangible coupling referenced in this ASP is NCHRP 350 compliant. There is no MASH compliant device available at this time. See SPDR report for more info.
12. Special grading detail and/or shielding may be required to maintain 4" maximum clear distance.

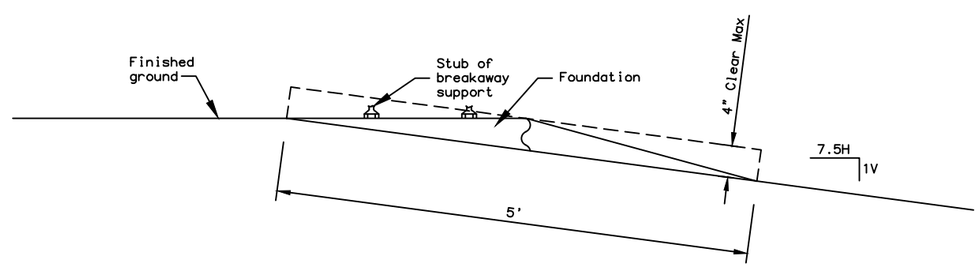


CLEARANCE DETAIL
(See note 12)

State of Alaska DOT&PF
ALASKA STANDARD PLAN

CONCRETE STREET LIGHT POLE FOUNDATION

Adopted as an Alaska Standard Plan by: Carolyn Morehouse
Carolyn Morehouse, P.E.
Chief Engineer

Adoption Date: 7/17/2020

Last Code and Stds. Review
By: KLK,MJM Date: 7/8/2020

Next Code and Standards Review Date: 7/8/2030

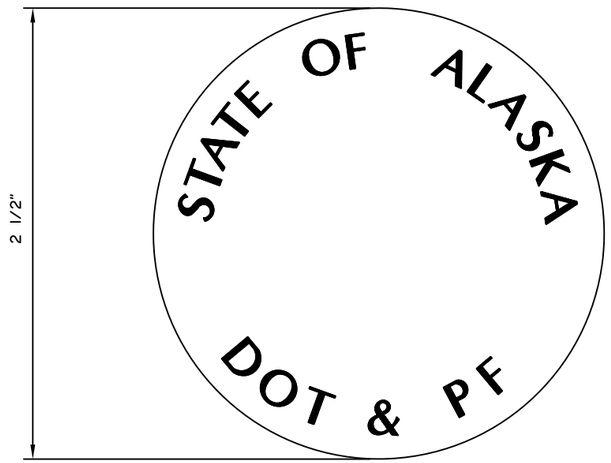


GENERAL NOTES:

1. For Structures under 200' total length: provide 1 monument.
2. For Structures 200' or over: provide 2 Monuments.
3. Monuments shall be located as directed by the Engineer.

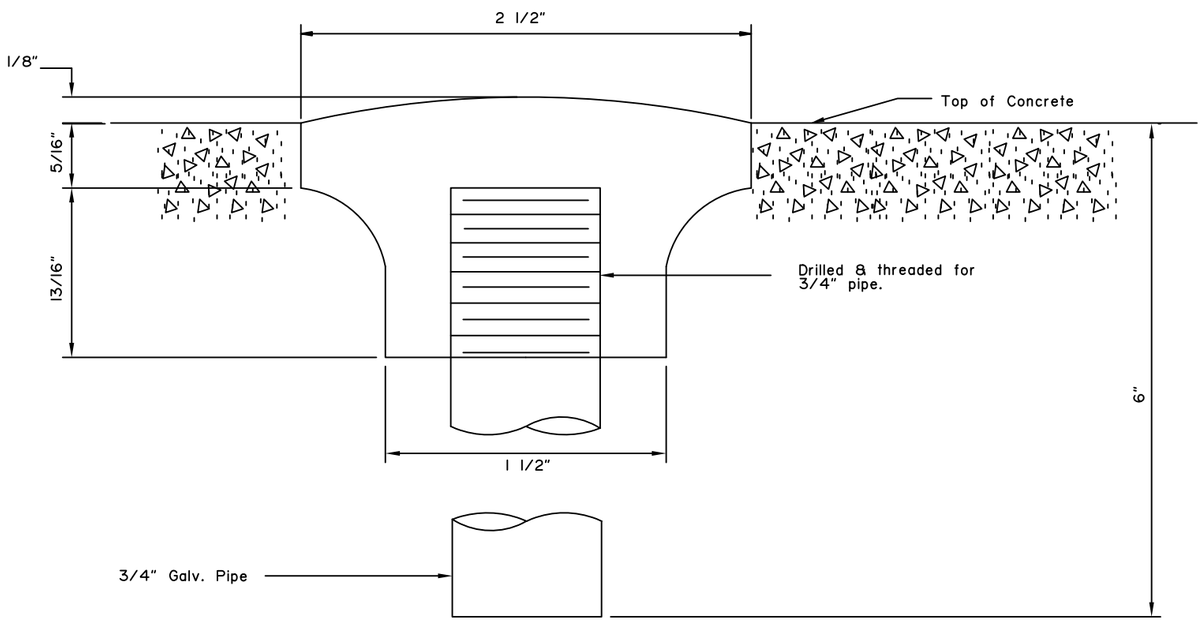


SURVEY MONUMENT

State of Alaska DOT&PF
ALASKA STANDARD PLAN

SURVEY MONUMENT

Adopted as an Alaska Standard Plan by: Kenneth J. Fisher, P.E.
Chief Engineer

Adoption Date: 02/08/2019

Last Code and Stds. Review
By: Date:

Next Code and Standards Review date: 02/08/2029

| M-16.01 | SHEET 1 of 1 |
|---|---|

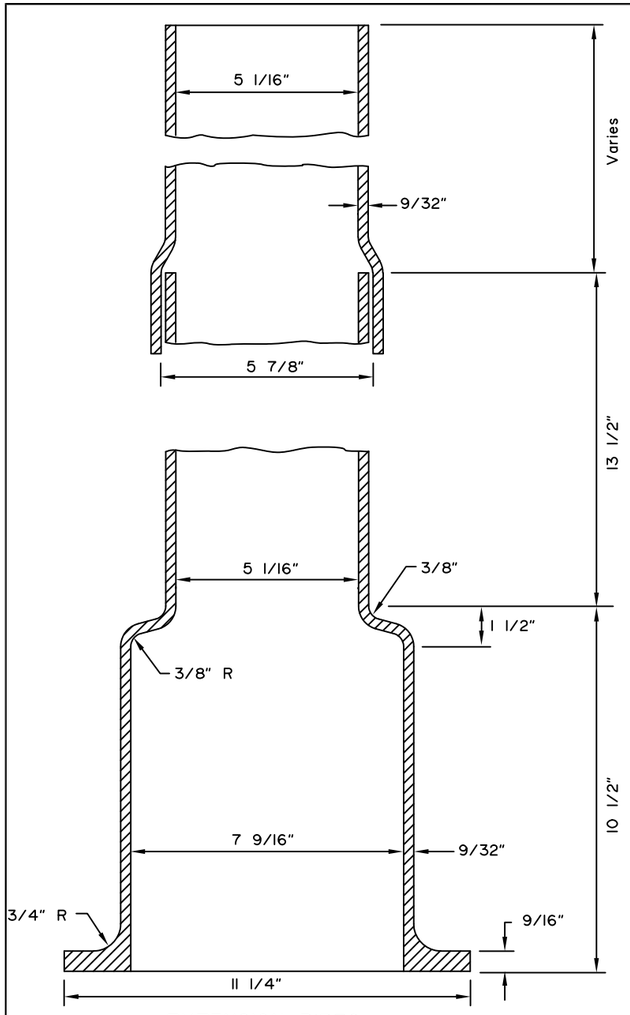


EXTENSION PIPES

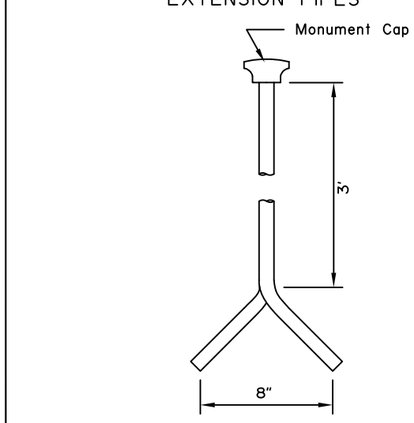


MONUMENT DETAIL

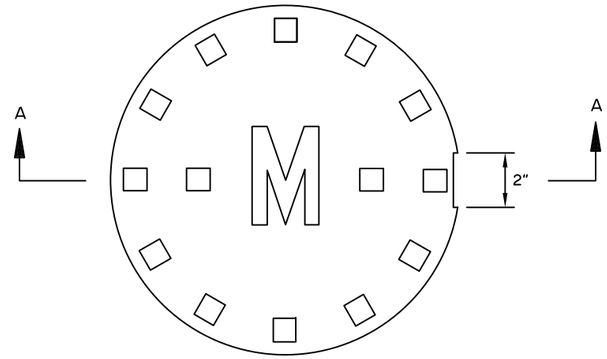


PLAN VIEW ACCESS COVER

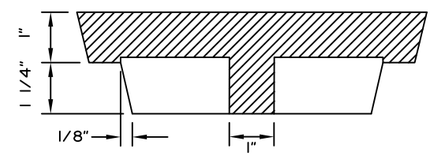


SECTION A-A

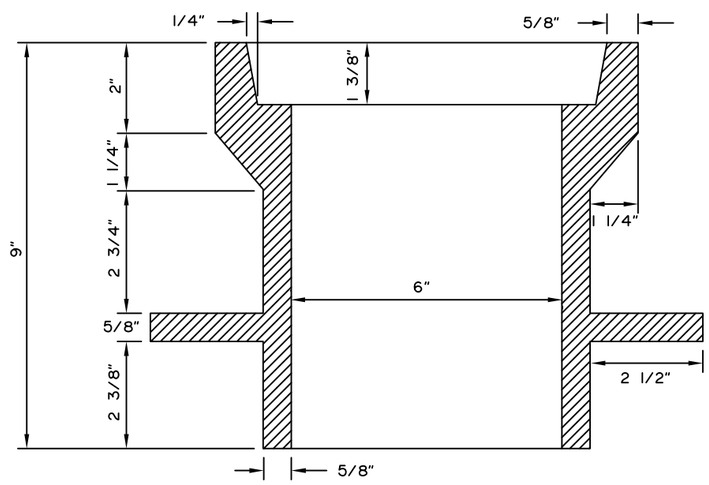


MONUMENT CASE

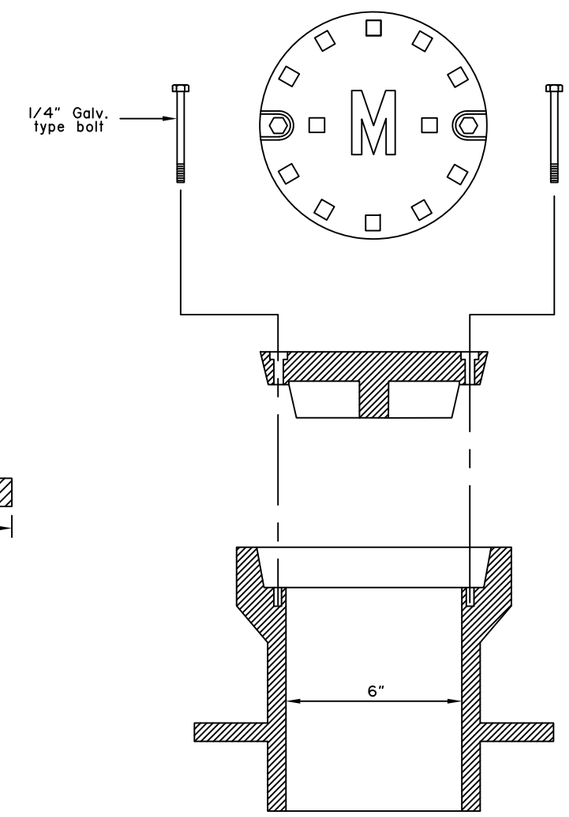


BOLTING MONUMENT CASE ASSEMBLY
(See Note 2)

## GENERAL NOTES:

1. Details shown are to indicate general design only. Dimensions and design may vary among the manufacturers.
2. Where monument cases are to be placed in paved area of a roadway or sidewalk, the top of the case and/or cover shall be the same elevation as the top of the finish surface with bolting type access cover.
3. Where monument cases are to be placed in a gravel surfaced roadway, the top of the case shall be placed 1'-0" below the top of the surface of the roadway.
4. In solid rock, drill a 2" Dia. hole a minimum of 1'-0" deep, fill with mortar and set cap. 3/4"x9" galvanized pipe, designated length when set in mortar.
5. The top of the monument cap shall be placed 1' ± above the bottom of the monument case.

State of Alaska DOT&PF
ALASKA STANDARD PLAN

**BRASS CAP MONUMENT AND MONUMENT CASE**

Adopted as an Alaska Standard Plan by: Kenneth J. Fisher, P.E.
Chief Engineer

Adoption Date: 02/08/2019

Last Code and Stds. Review
By: Date:

Next Code and Standards Review date: 02/08/2029

M-16.01

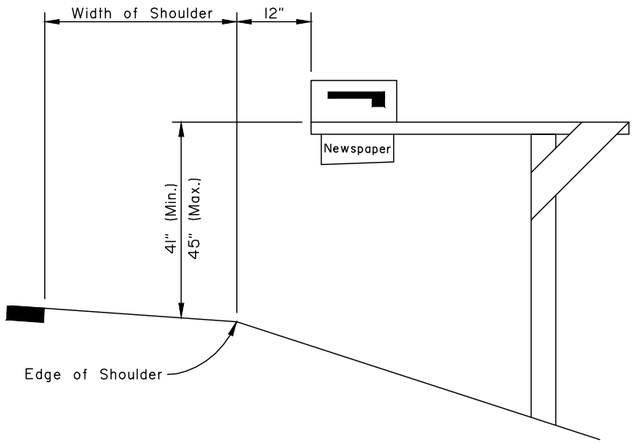


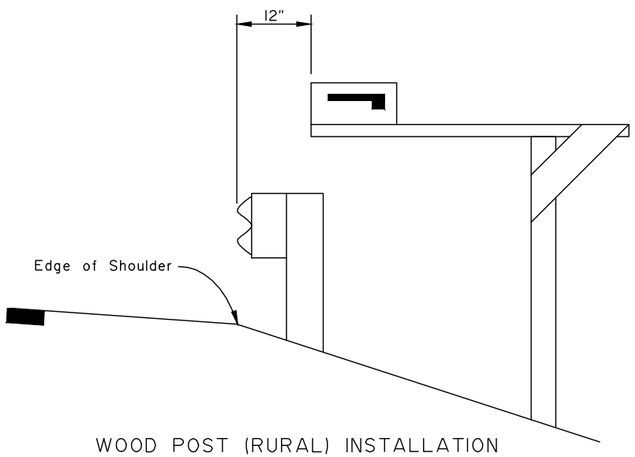


WOOD POST (RURAL) INSTALLATION

Single or Double Box

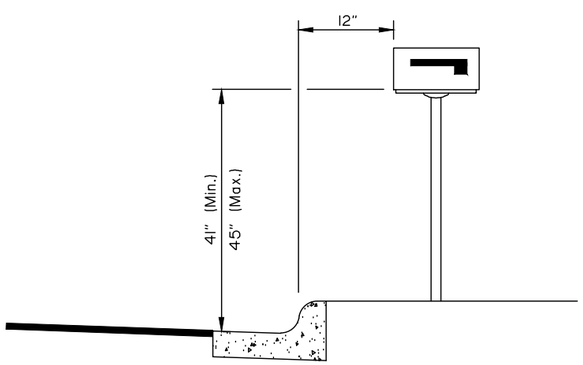


METAL POST (URBAN) INSTALLATION

Single or Double Box

Vc = Average Daily Traffic on Cross Road (vehicles per day)

Vm = Average Daily Traffic on Main Road (vehicles per day)

n = Number of Mailboxes at Mail Stop

| Posted Main Road Speed Limit | "D1" Distance (ft) n×Vc×Vm | |
|---|---|---|
| | ≤ 4000 | >4000 |
| ≤ 40 | 65 | 200 |
| > 40 | 65 | 295 |

| Posted Main Road Speed Limit | "D2" Distance (ft) Cross Road ADT | |
|---|---|---|
| | ≤ 4000 | >4000 |
| ≤ 40 | 100 | 100 |
| > 40 | 150 | 200 |

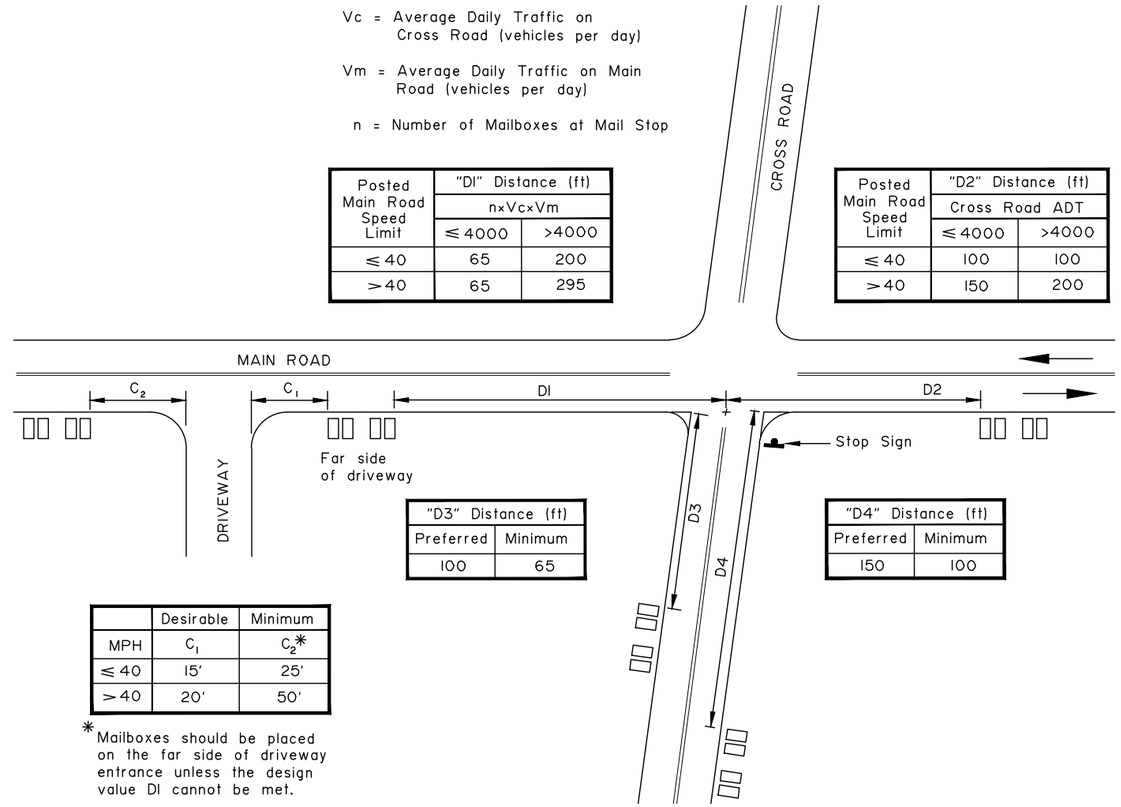


| "D3" Distance (ft) | |
|---|---|
| Preferred | Minimum |
| 100 | 65 |

| "D4" Distance (ft) | |
|---|---|
| Preferred | Minimum |
| 150 | 100 |

| | Desirable | Minimum |
|---|---|---|
| MPH | $C_1$ | $C_2$* |
| ≤ 40 | 15' | 25' |
| > 40 | 20' | 50' |

*Mailboxes should be placed on the far side of driveway entrance unless the design value D1 cannot be met.

MAILBOX LOCATION AT INTERSECTIONS AND DRIVEWAYS

GENERAL NOTES:

1. Install mailboxes conforming to U.S. Postal Service requirements.
2. Mailbox supports shall not present a rigid, unyielding impact resistant hazard to road traffic, but shall be flexible and yielding to vehicular impact. Install crashworthy supports in accordance with Standard Plan M-23.
3. Installation shall be on the right side of roadway in the direction of mail carrier travel with the exception of one-way streets where they may be placed on either side.
4. Locate mailboxes to minimize dangers to road traffic, carriers and postal recipients.
5. Provide a minimum shoulder width of 8' unless otherwise approved by Engineer. Install single and double mailbox supports separated by at least 3', and desirably 4', from each other. More than two boxes on a single support is allowable only as shown on Standard Plan M-23.
6. Newspaper receptacles shall conform to the same setback and support regulations as mailboxes. Where newspaper receptacles and mailboxes are to be mounted together, the newspaper receptacle may be mounted beneath the mailbox or on the side of the mailbox support opposite the reflecting marker.

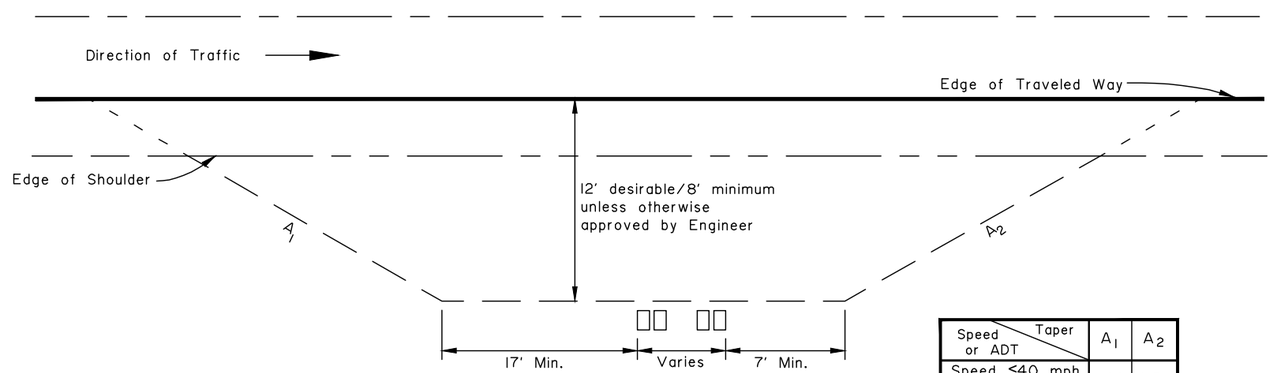


TURNOUTS FOR GROUPED BOXES

| Speed or ADT \ Taper | $A_1$ | $A_2$ |
|---|---|---|
| Speed ≤40 mph and ADT ≤400 | 4:1 | 2.5:1 |
| Speed >40 mph or ADT >400 | 20:1 | 12:1 |

TURNOUT TAPERS

State of Alaska DOT&PF
ALASKA STANDARD PLAN

MAILBOX LOCATION

Adopted as an Alaska Standard Plan by: Carolyn Morehouse
Carolyn Morehouse, P.E.
Chief Engineer

Adoption Date: 7/17/2020

Last Code and Stds. Review
By: KLH Date: 7/8/2020

Next Code and Standards Review date: 7/8/2030

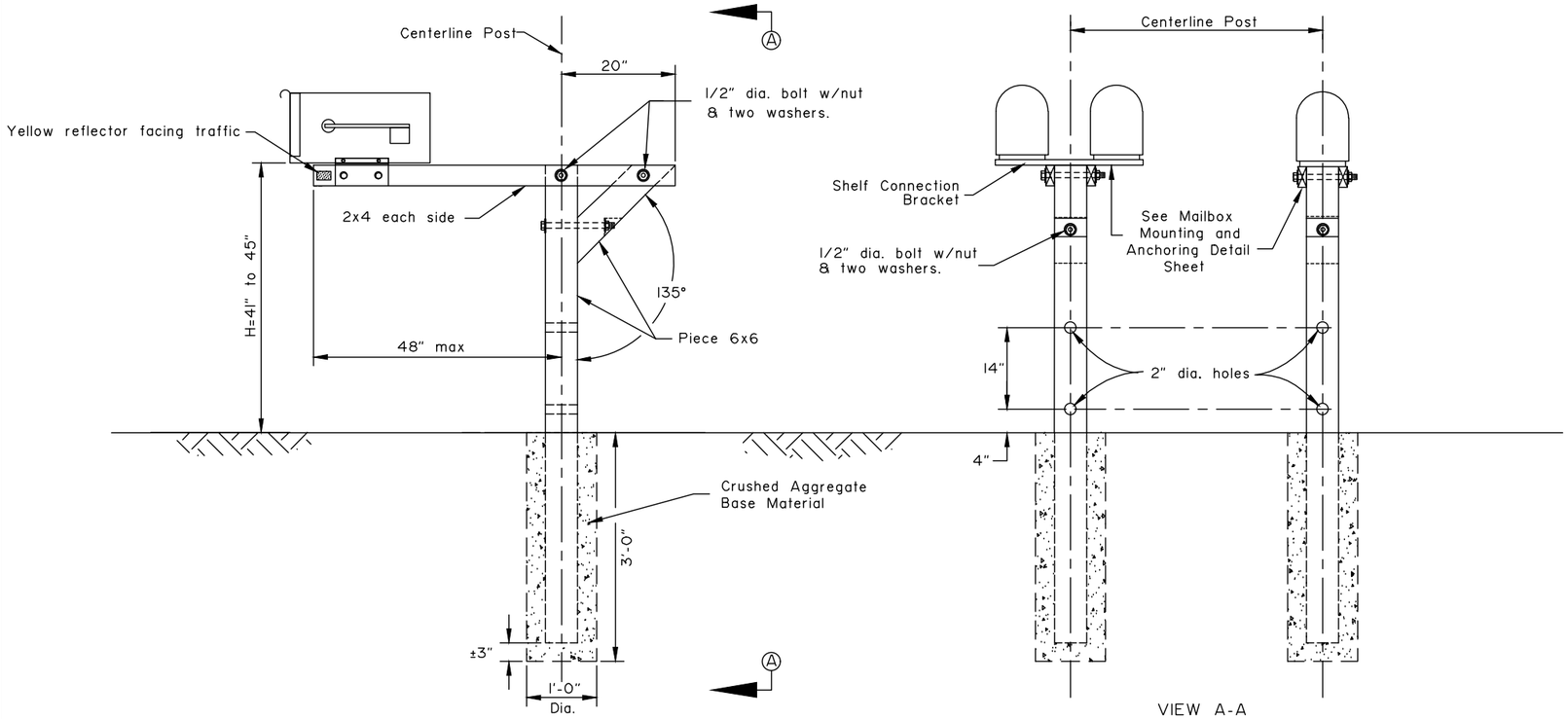


TYPICAL WOOD CANTILEVER INSTALLATION

## GENERAL NOTES:

1. See Standard Plan M-20 for locating posts and boxes along roadway.
2. Posts shall be 6"x6" Treated Wood Post S4S or 2" (Max.) Standard Weight Steel Pipe.
3. Each support structure shall not accomodate more than two mailboxes unless the support structure conforms to the requirements of the U.S. Postal Service and is approved by the Engineer.
4. Other steel or aluminum structural sections may be used except, the stiffness properties equivalent to the 2" dia. standard weight steel pipe shall not be exceeded.
5. Reflectors shall have a minimum area of 4.5 sq. in.

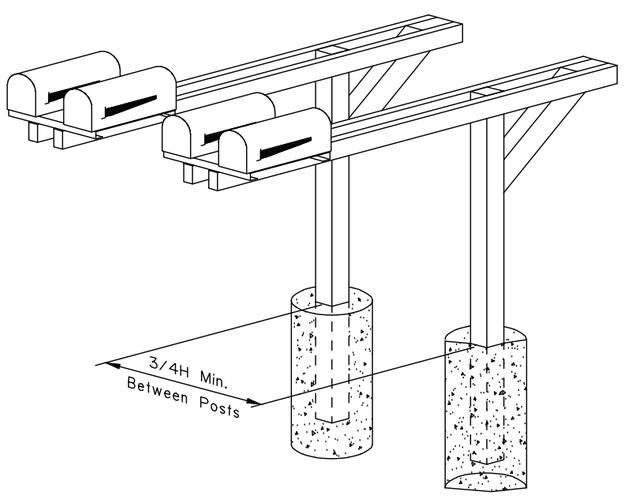


TYPICAL GANG BOX INSTALLATION

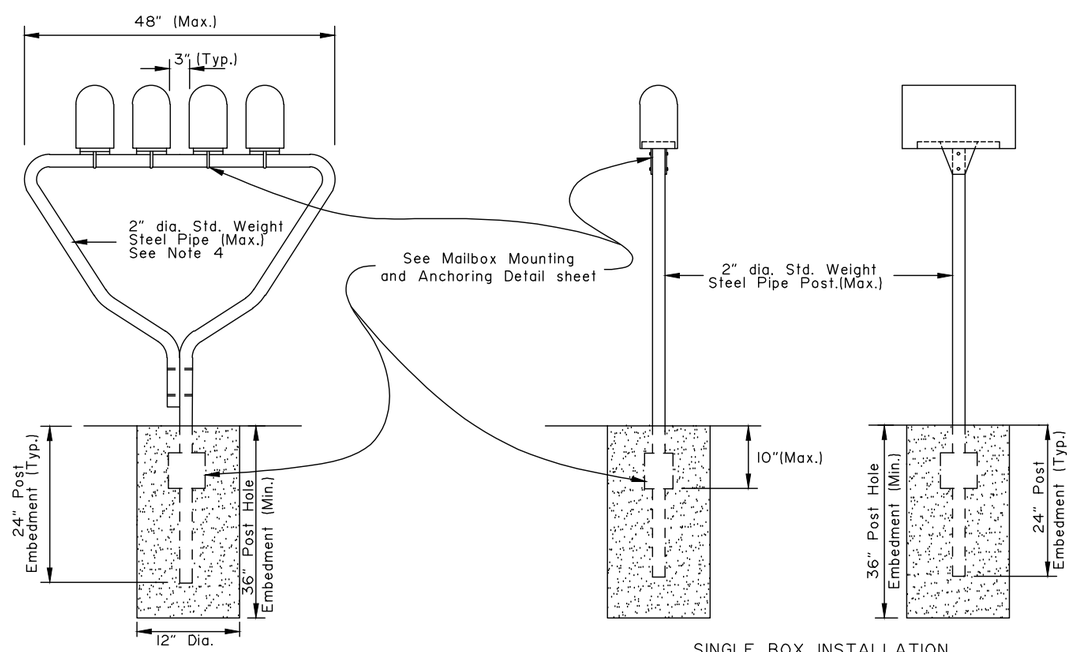


MULTIPLE BOX INSTALLATION (U.S.P.S. Approved)

SINGLE BOX INSTALLATION

METAL POST SUPPORTS (URBAN ONLY)

State of Alaska DOT&PF
ALASKA STANDARD PLAN

**MAILBOX INSTALLATION**

Adopted as an Alaska Standard Plan by: Carolyn Morehouse
Carolyn Morehouse, P.E.
Chief Engineer

Adoption Date: 7/17/2020

Last Code and Stds. Review
By: KLH Date: 7/8/2020

Next Code and Standards Review date: 7/8/2030

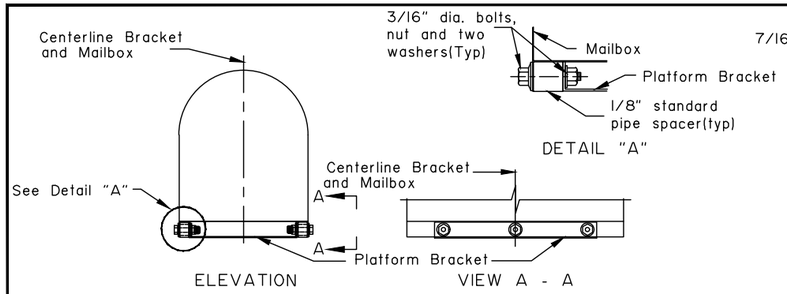


MAILBOX SUPPORT PLATFORM ASSEMBLY

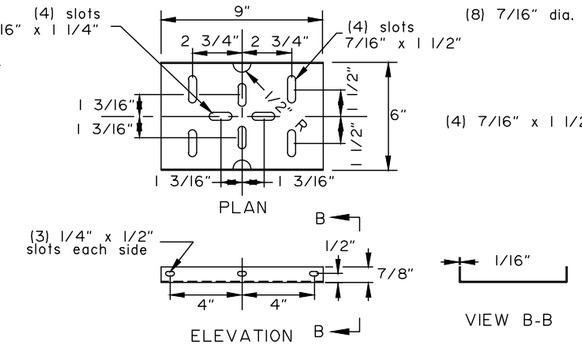


STEEL PLATFORM BRACKET

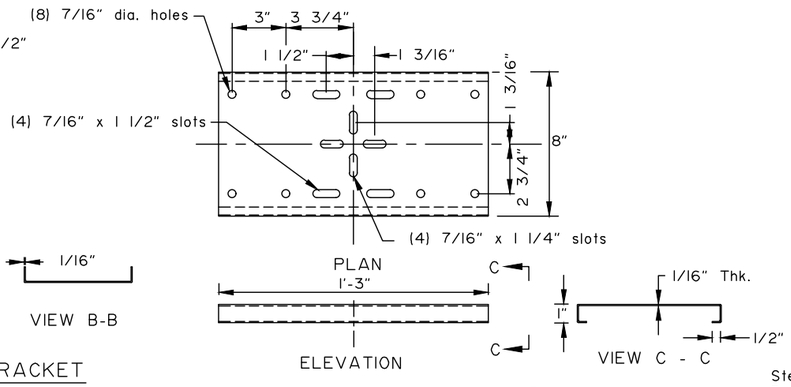


STEEL SHELF BRACKET

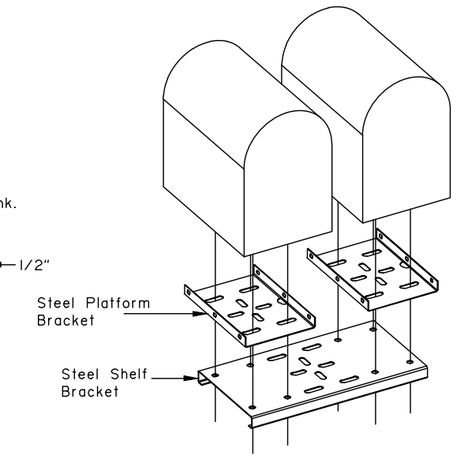


MAILBOX CONNECTION DETAIL

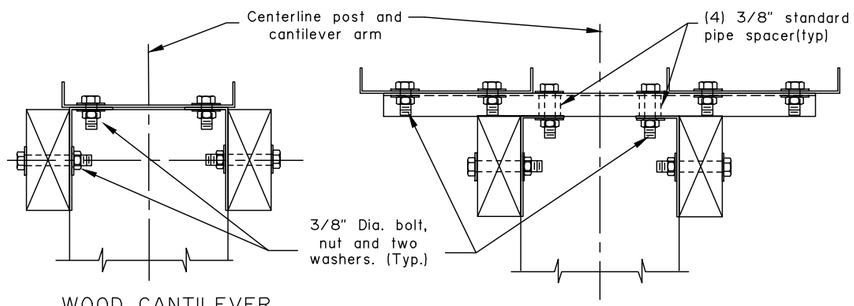


WOOD CANTILEVER ARM PLATFORM CONNECTION

WOOD CANTILEVER ARM SHELF CONNECTION

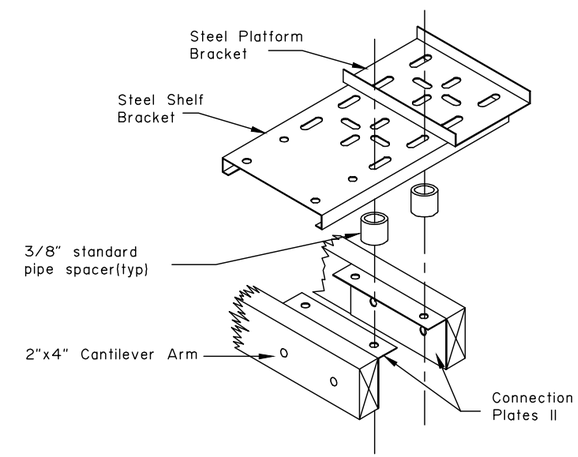


SHELF BRACKET CONNECTION DETAIL

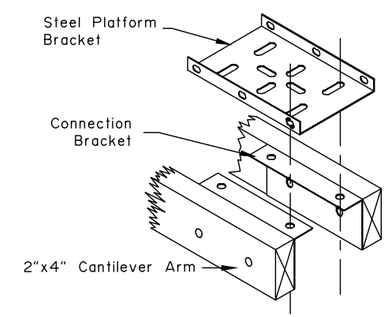


PLATFORM BRACKET CONNECTION DETAIL

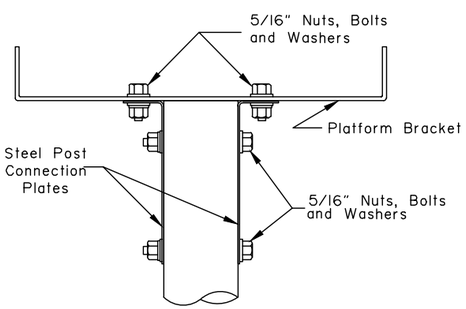


BRACKET ASSEMBLY DETAIL

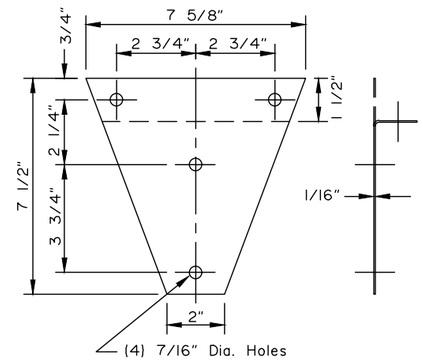


STEEL POST CONNECTION PLATES for STEEL PIPE POST

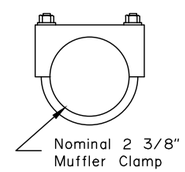


CLAMP

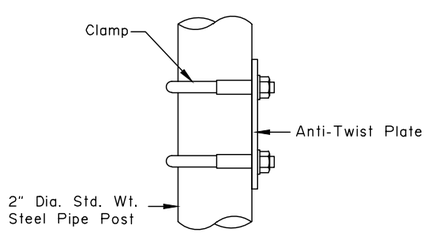


ANTI-TWIST PLATE ASSEMBLY DETAIL

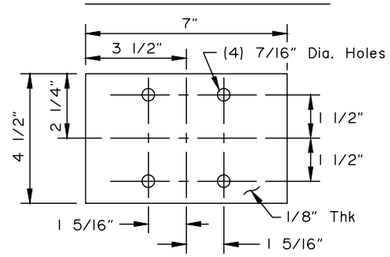


ANTI-TWIST PLATE for STEEL PIPE POST

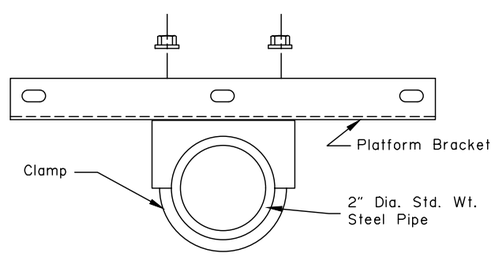


MULTIPLE BOX CLAMP ASSEMBLY DETAIL

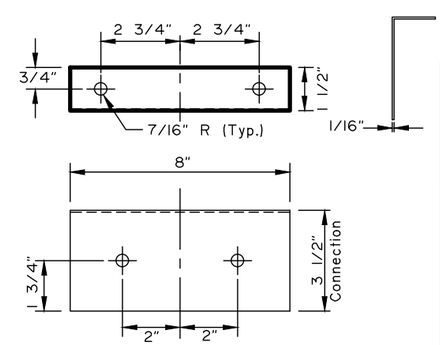


CONNECTION PLATES for WOOD CANTILEVER ARM

State of Alaska DOT&PF
ALASKA STANDARD PLAN

**MAILBOX MOUNTING AND ANCHORING DETAILS**

Adopted as an Alaska Standard Plan by: Carolyn Morehouse
Carolyn Morehouse, P.E.
Chief Engineer

Adoption Date: 7/17/2020

Last Code and Stds. Review
By: KLH Date: 7/8/2020

Next Code and Standards Review date: 7/8/2030

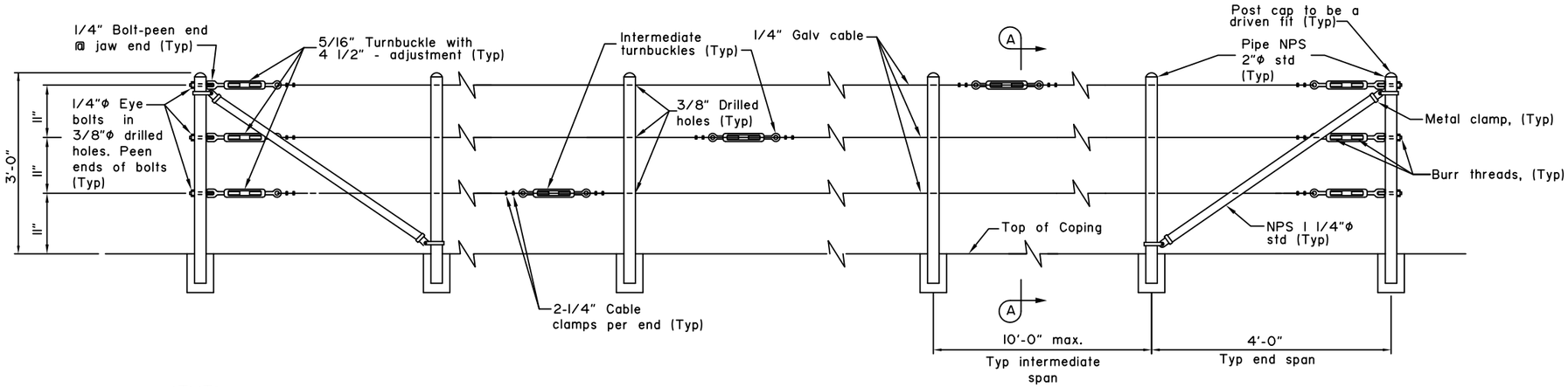


ELEVATION

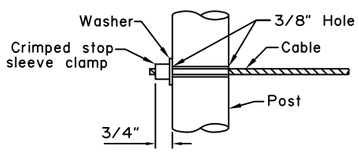


ALTERNATIVE DEAD END ANCHORAGE

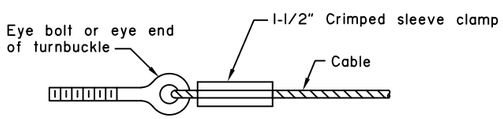


ALTERNATIVE CABLE CONNECTION

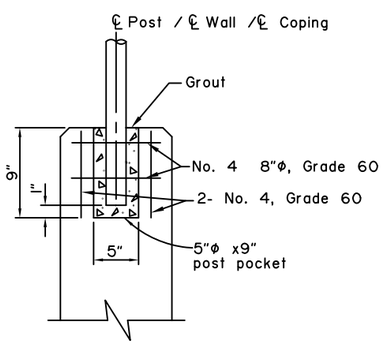


POST POCKET

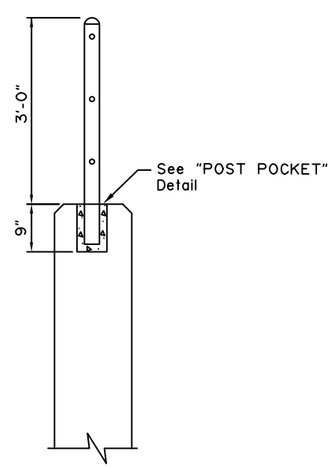


SECTION A-A
CAST IN WALL OR COPING

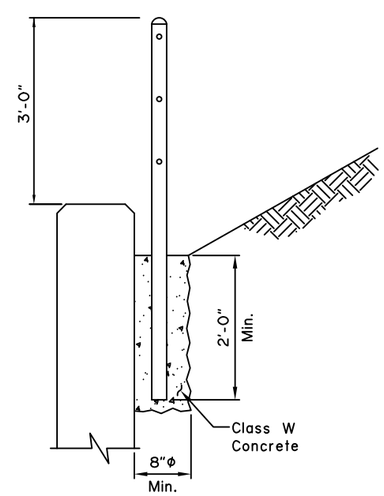


SECTION A-A
BEHIND WALL WITHOUT GUTTER

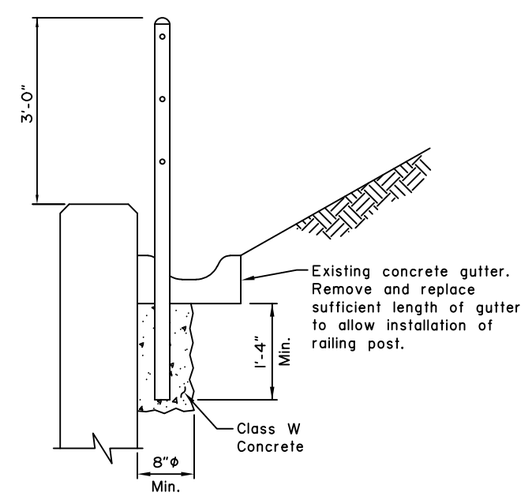


SECTION A-A
BEHIND WALL WITH GUTTER

No Scale

## CONSTRUCTION NOTES:

1. Place intermediate turnbuckles in adjacent spans. Maximum span between turnbuckles is 200'-0".
2. Galvanize all posts, cable and hardware.
3. Install posts plumb.
4. Alignment of holes in posts may vary to conform to slope of top of wall.
5. Line posts shall be braced horizontally and trussed diagonally in both directions at intervals not to exceed 1000'-0" and at each end.
6. Typical end spans, braced in both directions, shall be constructed at changes in line where the angle of deflection is 15° or more.
7. Provide thimbles at all cable loops.

## DESIGN NOTES:

1. This rail is not intended for use where pedestrians or bicyclists are normally present.
2. This rail is intended for use where M&O personnel, inspectors, or engineers may be working at the top of a wall.

State of Alaska DOT&PF
ALASKA STANDARD PLAN

**CABLE SAFETY RAIL**

Adopted as an Alaska Standard Plan by: Kenneth J. Fisher, P.E.
Chief Engineer

Adoption Date: 02/08/2019

Last Code and Stds. Review
By: Date:

Next Code and Standards Review date: 02/08/2029

## GENERAL NOTES

1. See the standard specifications for the aluminum alloys that you may use for sign sheeting and wind framing members.
2. Fabricate all signs from 0.125" thick aluminum sheeting.
3. Sign fabricators may use alternates to the zee shaped framing member with approval of the engineer, if the frame manufacturer certifies their design equals or exceeds the strength of the zee shaped design.
4. Install one piece wind framing members on all signs up to 23.5' wide. Use one splice in each wind frame on all signs wider than 23.5'. Locate splices at least 18" from all posts and panel edges. Stagger splices in adjacent framing members at least 8.0' apart.
5. Attach wind framing members with rivets or with an engineer approved, double sided, high strength, adhesive tape. Clean and handle sheeting and framing members and apply tape in accordance with the tape manufacturer's written instructions. Install two rivets in both ends of each framing member.
6. Use 3/16" diameter rivets conforming to aluminum alloy 6061-T6 for cold driven rivets, or aluminum alloy 6061-T43 for hot driven rivets.
7. Sign fabricators may use sign panels extruded with integral framing with approval of the engineer, if the manufacturer certifies their design equals or exceeds the strength of the 0.125" thick panel with framing attached to it.
8. Frame all signs taller than 8.0' with five wind framing members located (H-0.15)/4 spaces. If needed, make a horizontal splice at the middle wind frame.
9. Do not use round pipes for sign supports.

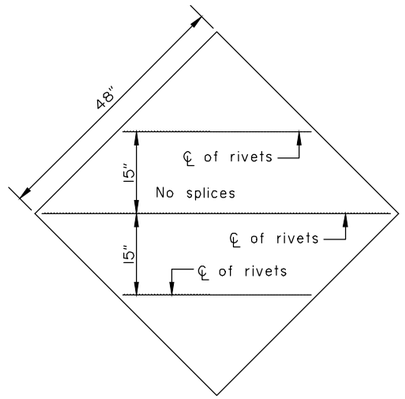


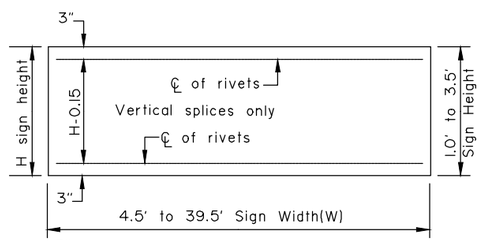


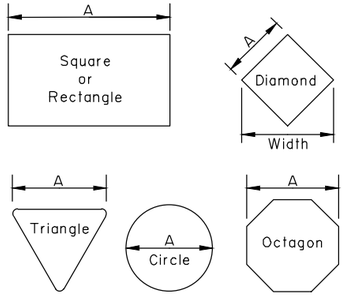


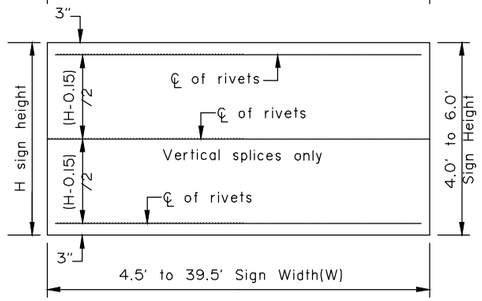


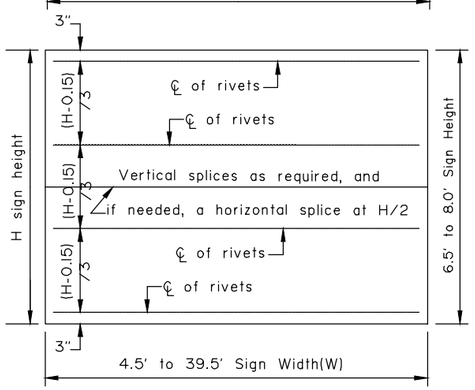


| Maximum size unframed signs using 0.125" thick aluminum sheeting. | |
|---|---|
| Sign Shape | A |
| Squares, Shields, and Route Markers | 48" |
| Rectangles | 48" |
| Diamonds | 48" |
| Triangles | 48" |
| Rounds and Octagons | 48" |

Install wind framing on all signs that exceed the dimensions listed.

LIGHT SIGNS

WIND FRAMING LOCATIONS

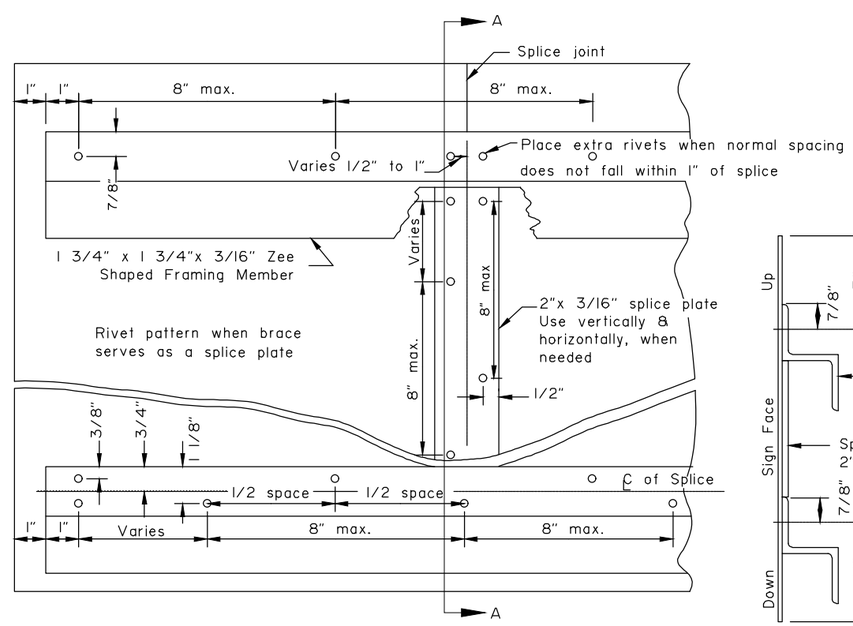


RIVET DETAIL FOR ZEE SHAPED WIND FRAMING & SPLICE PLATE

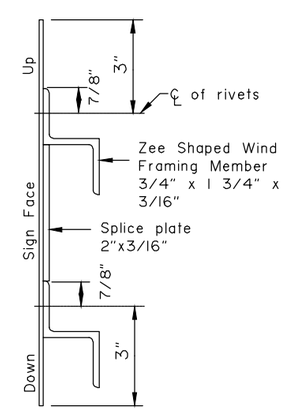


SECTION A-A

Note: Drawing not to scale

State of Alaska DOT&PF
ALASKA STANDARD PLAN

SIGN FRAMING

Adopted as an Alaska Standard Plan by: Carolyn Morehouse
Carolyn Morehouse, P.E.
Chief Engineer

Adoption Date: 7/17/2020

Last Code and Stds. Review
By: WTH Date: 7/8/2020

Next Code and Standards Review date: 7/8/2030

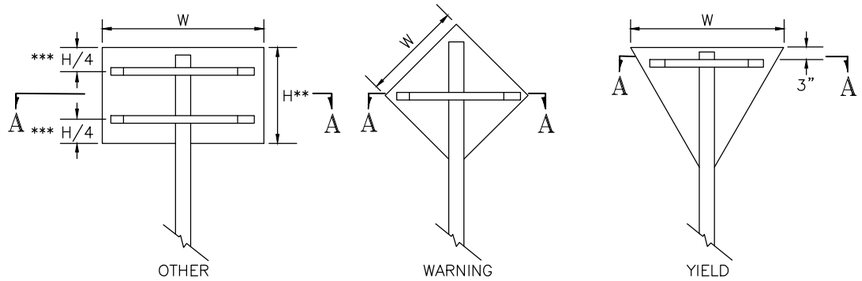


*** Use one brace when H ≤ 18"
Use two braces when 18"< H < 48"
Use three braces when H ≥ 48"

** Position of brace may be varied to match Predrilled mounting holes in panel

SIGN BRACING PLACEMENT

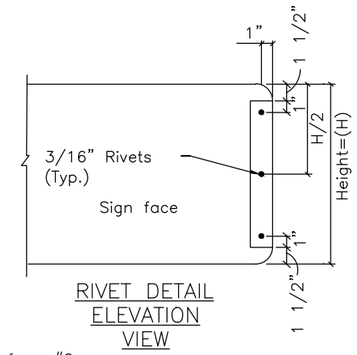


RIVET DETAIL
ELEVATION
VIEW

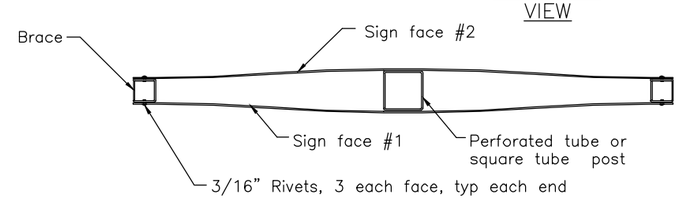


PLAN VIEW

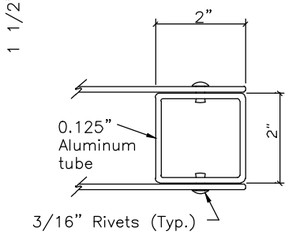


END BRACE DETAIL

SMALL STREET NAME SIGN (D3-1, D3-1A, D3-1D) BRACING DETAILS

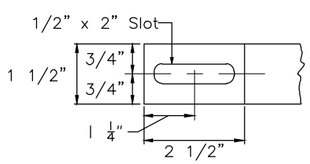


DETAIL OF BRACE SLOT
Elevation view

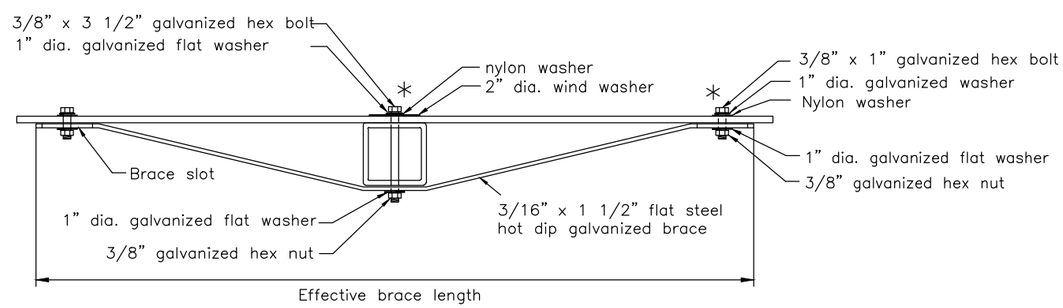


TUBE POST SIGN BRACING SECTION A–A
Plan view

* Adjust location of bracing so that bolts and washers will miss the sign legend

| Sign Width(W) | Effective Brace Length | | |
|---|---|---|---|
| | Warning | Yield | Other |
| 30" | 36" | 24" | 24" |
| 36" | 42" | 30" | 30" |
| 42" | 48" | – | 36" |
| 48" | Two posts | 36" | 42" |

< 30" No bracing required and use square tube

Note: Drawing not to scale

State of Alaska DOT&PF
ALASKA STANDARD PLAN

BRACING FOR SIGNS
MOUNTED ON SINGLE POST

Adopted as an Alaska Standard Plan by: Carolyn Morehouse
Carolyn Morehouse, P.E.
Chief Engineer

Adoption Date: 7/17/2020

Last Code and Stds. Review
By: WTH Date: 7/8/2020

Next Code and Standards Review date: 7/8/2030

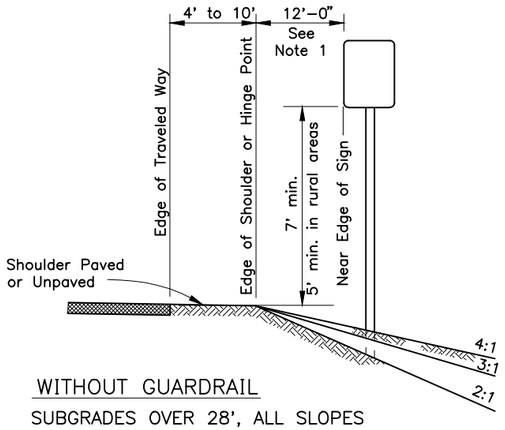


WITHOUT GUARDRAIL
SUBGRADES OVER 28', ALL SLOPES

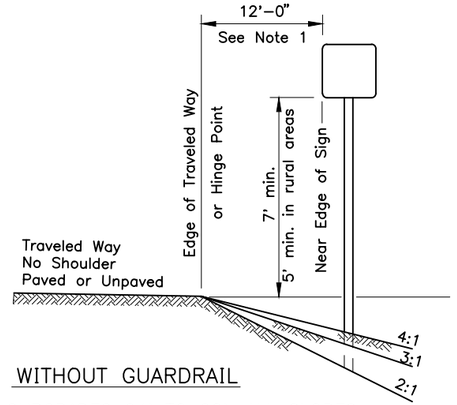


WITHOUT GUARDRAIL
SUBGRADES 24' TO 28', ALL SLOPES

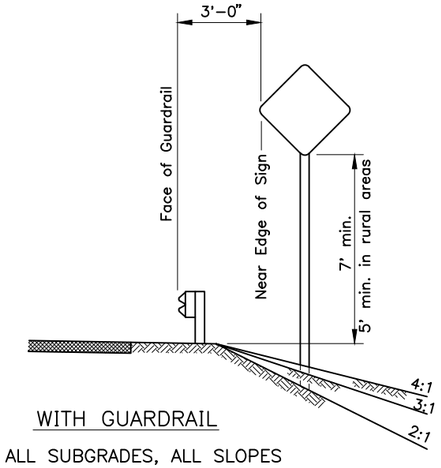


WITH GUARDRAIL
ALL SUBGRADES, ALL SLOPES

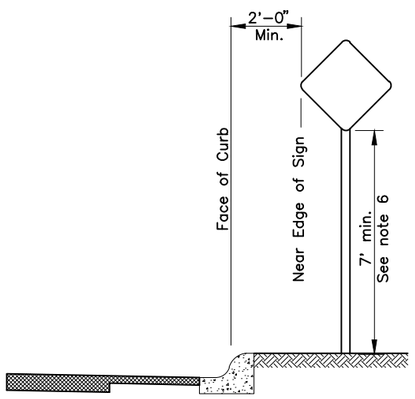


CURB WITHOUT SIDEWALK

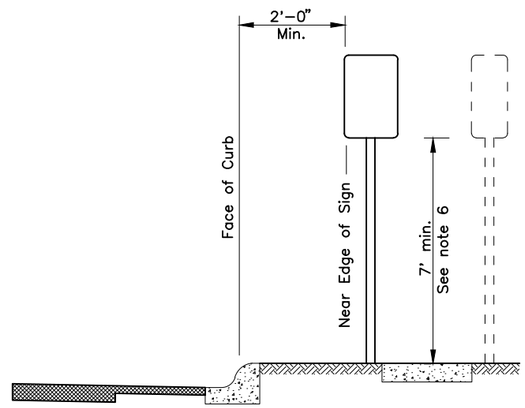


CURB WITHOUT PARKWAY AND SIDEWALK
(If R/W width permits, signs should be placed behind sidewalk.)

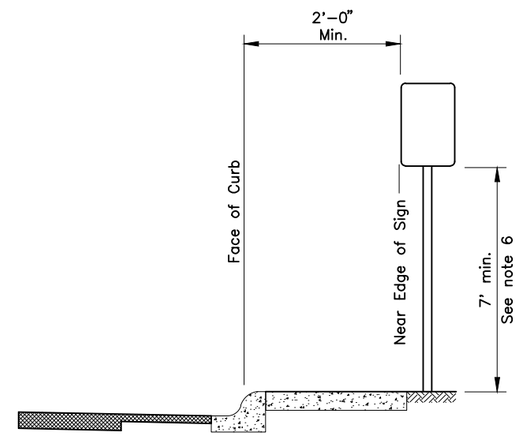


CURB WITH SIDEWALK WITHOUT PARKWAY

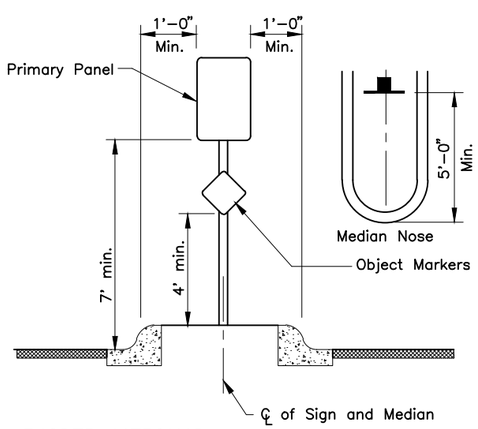


RAISED MEDIANS
Minimum 4' Width for Signing

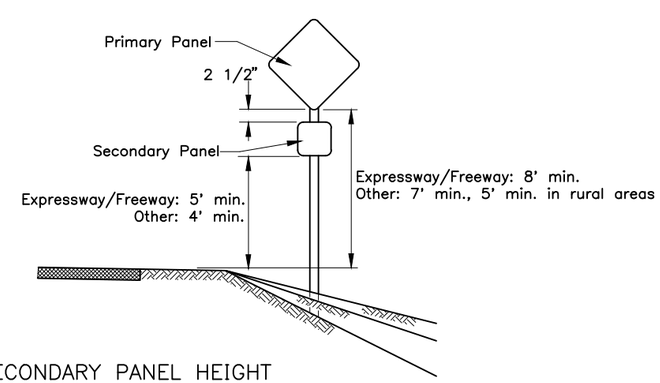


SECONDARY PANEL HEIGHT
ALL TWO PANEL MOUNTING

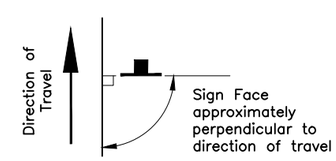


SIGN POSITIONING

## GENERAL NOTES

1. Unless shown otherwise on the plans, the standard sign offset is 12'. The minimum is 6' where shoulder width is 6' or greater.
2. Add 6" to mounting height on unpaved roads.
3. If signs extend over bike paths, the minimum vertical clearance is 8' 0".
4. When signs are placed 30' or more from the edge of traveled way, mount them with the bottom of the sign at least 5' above the road surface at the near edge of the road.
5. When multiple hinged sign supports are used, mount hinges at least 7' above the ground.
6. Minimum mounting height is 7'-0" where parking or pedestrian movements are likely to occur, or where sings extend over sidewalks.
7. For construction signs in rural areas, mounting height shall be 7' minimum.

State of Alaska DOT&PF
ALASKA STANDARD PLAN

POST MOUNTED SIGN
OFFSET AND HEIGHT

Adopted as an Alaska Standard Plan by: Carolyn Morehouse
Carolyn Morehouse, P.E.
Chief Engineer

Adoption Date: 7/17/2020

Last Code and Stds. Review
By: KLK Date: 7/8/2020

Next Code and Standards Review Date: 7/8/2030

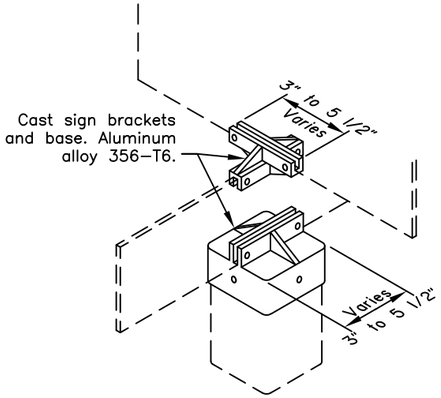


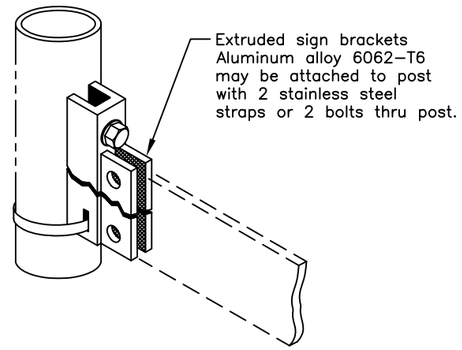


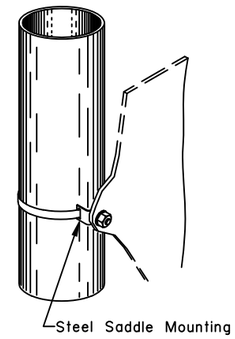


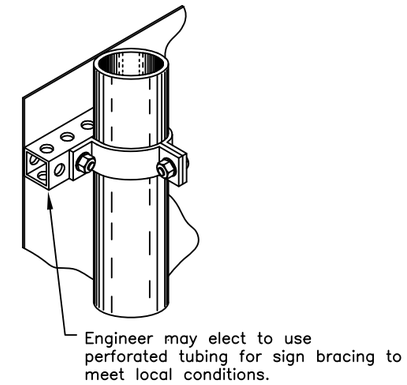


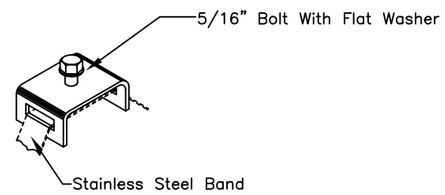


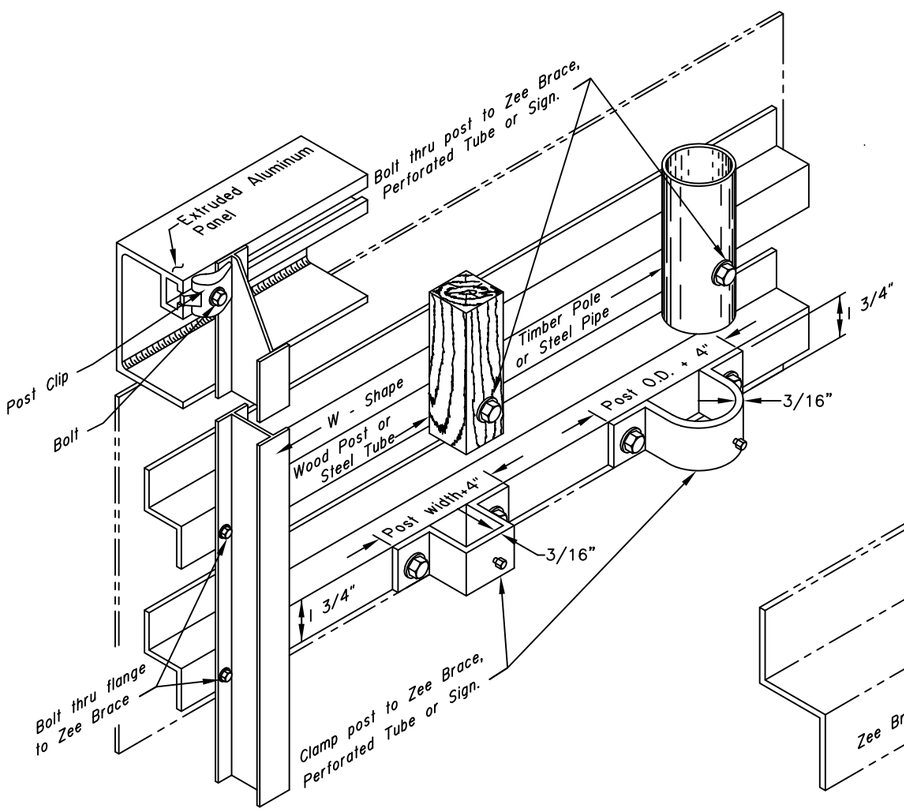


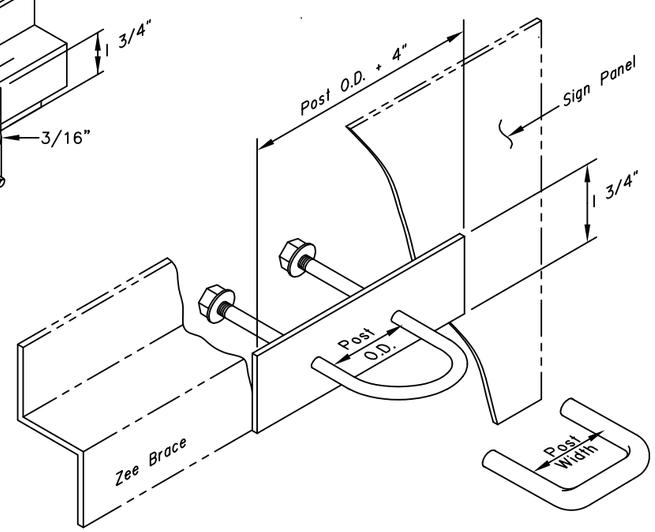


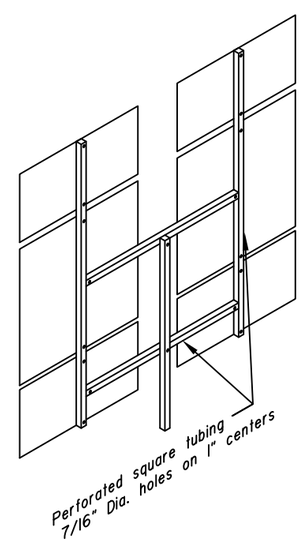


## GENERAL NOTES

1. Details shown indicate general design only. Dimensions and design may vary among the manufacturers.
2. Install weather tight caps on all pipe and tube post (except perforated tubing).
3. Protect sign posts installed using driving methods with drive caps during installation.
4. Bolt braces to posts at each point where they cross posts.
5. Install signs with top of post, mounting brackets, etc. with a minimum of 3" below top of sign.
6. Paint all sign mounting fasteners on sign face a color closely matching the sign face.
7. Attach all signs, zees and braces mounted to the posts with 5/16" bolts.
8. Furnish all aluminum nuts, bolts and washers with anodized finish.

FASTENER SPECIFICATION TABLE

| FASTENERS | | ALUMINUM | STEEL | STAINLESS STEEL |
|---|---|---|---|---|
| BOLTS | MACHINE CARRIAGE "U" | 2024–T4 | A–307 | A–276 |
| NUTS | REGULAR | 6061–T6 | A–307 | A–276 |
| | LOCK | 2017–T4 | | |
| WASHERS | | 2024–T4 | A–36 | A–276 |
| POST CLIP | | 356–T6 | | |

State of Alaska DOT&PF
ALASKA STANDARD PLAN

**SIGN TO SIGN POST CONNECTION**

Adopted as an Alaska Standard Plan by: Kenneth J. Fisher, P.E.
Chief Engineer

Adoption Date: 02/08/2019

Last Code and Stds. Review
By: Date:

Next Code and Standards Review date: 02/08/2029

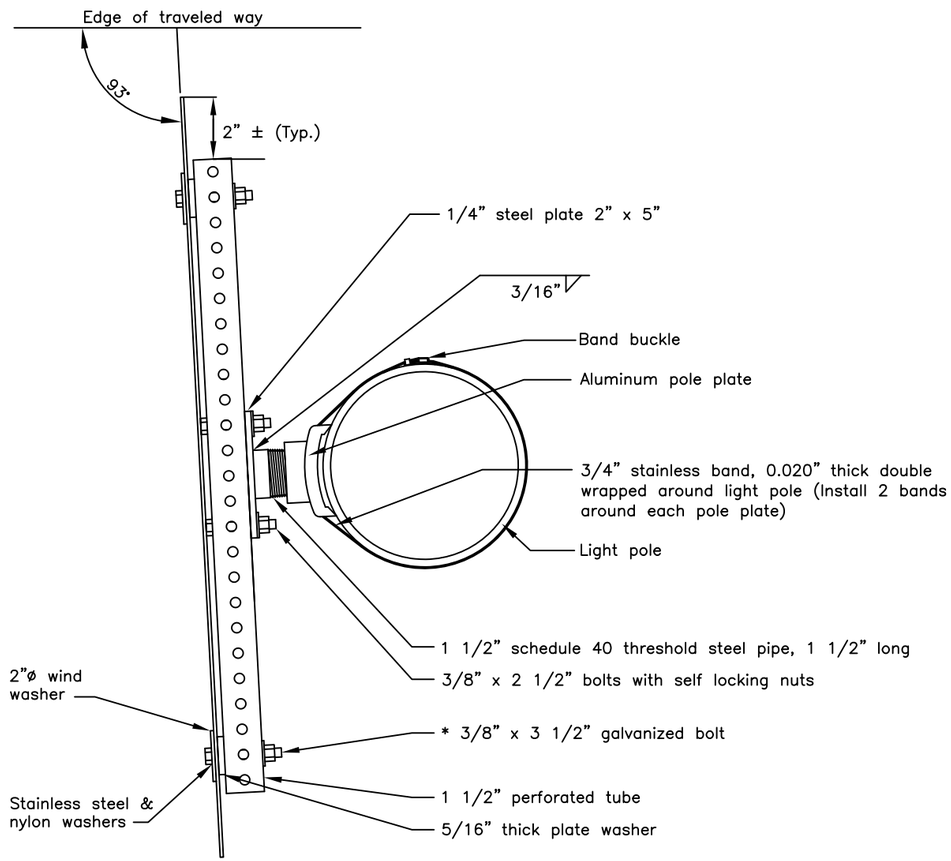


ELECTROLIER SIGN MOUNTING
(PLAN VIEW)

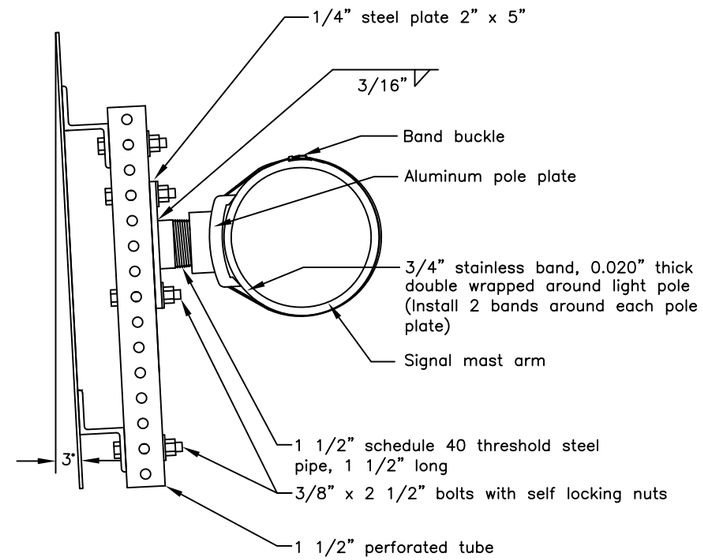


SIGNAL POLE MAST ARM SIGN MOUNTING
(ELEVATION VIEW)

## GENERAL NOTES

1. Use pole plate assemblies shown here to install signs on tapered mast arms and light poles. Install one pole plate per 10 square feet of sign panel. Use at least two plates for each installation.
2. Fabricate each pole plate-to-perforated tube adapter (steel plate welded to pipe) using steel plate conforming to ASTM A36 and steel pipe conforming to ASTM A53. Paint these adapters in conformance with section 504 of the Standard Specifications for Highway Construction, latest edition.
3. Paint the assemblies in accordance with AASHTO standard specification M69.
4. Attach each pole plate with two bands of 3/4" wide by 0.020" thick stainless steel banding material. Double wrap each band and tighten it until the band stops moving through the buckle.
5. Install bolts, nuts and washers conforming to ASTM A325.

TABLE 1
POLE PLATE SPACING

| NO. OF POLE PLATES | OVERHANG | BETWEEN POLE PLATES | OVERHANG |
|---|---|---|---|
| 2 | 0.2W | 1 SPACE AT 0.6W 2 | 0.2W |
| 3 | 0.15W | SPACES AT 0.35W 3 | 0.15W |
| 4 | 0.125W | SPACES AT 0.25W 1 | 0.125W |
| 5 | 0.2W | SPACE AT 0.6W | 0.2W |

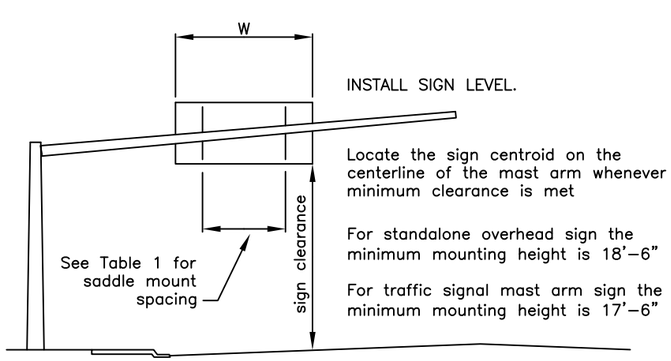


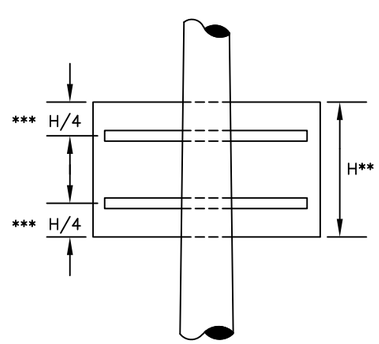


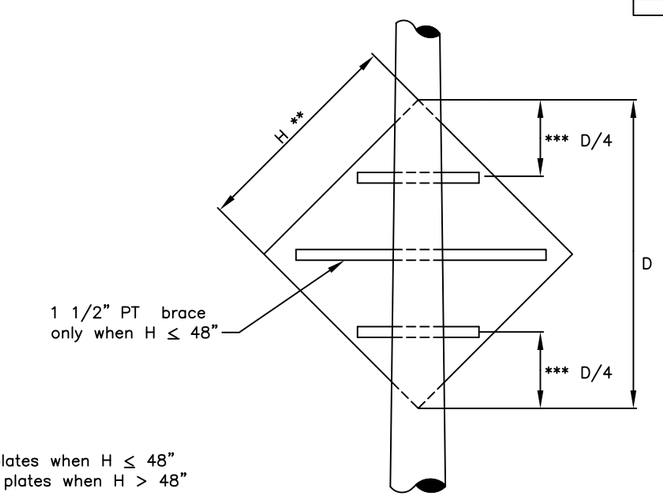


** Use two pole plates when H ≤ 48"
use three pole plates when H > 48"

*** When sign panels features predrilled mountings holes, use them to attach the perforated tubes

State of Alaska DOT&PF
ALASKA STANDARD PLAN

**POLE AND MASTARM SIGN MOUNTING**

Adopted as an Alaska Standard Plan by: Kenneth J. Fisher, P.E.
Chief Engineer

Adoption Date: 02/08/2019

Last Code and Stds. Review
By: Date:

Next Code and Standards Review date: 02/08/2029

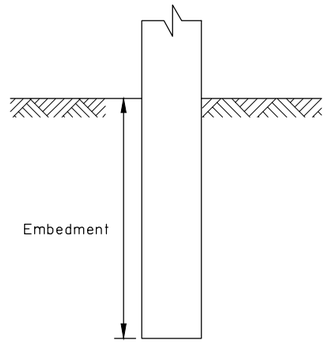


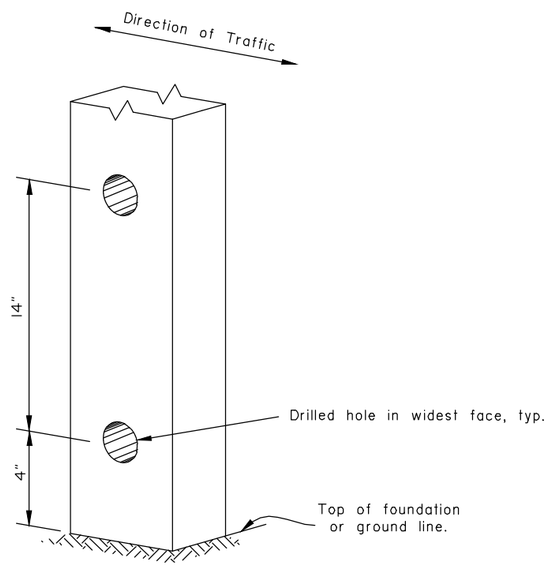


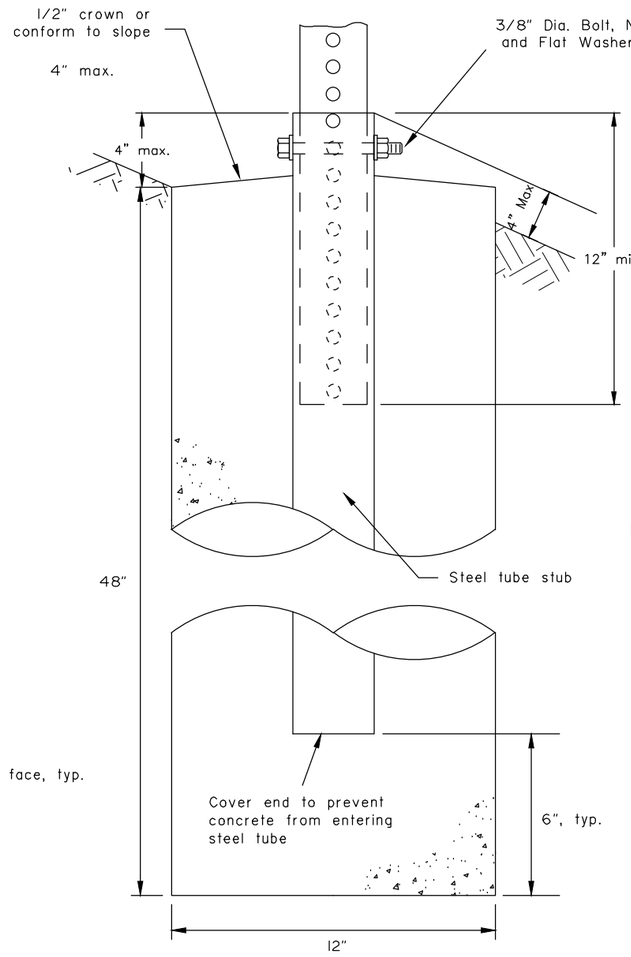


SLEEVE TYPE
CONCRETE FOUNDATION

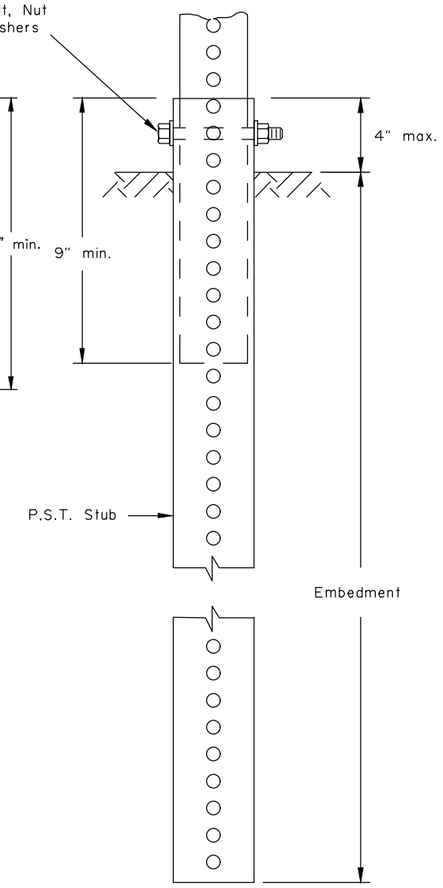


SLEEVE TYPE*
SOIL EMBEDMENT

## GENERAL NOTES:

1. Sign shall be placed symmetrically around posts and refer to Standard Plan S-00 for sign framing details.
2. See plans for type of post, size and embedment type.
3. To maintain crashworthiness, install no more than the number of P.S.T.s or wood posts specified in the tables within 7' of each other.
4. Concrete shall be class B.
5. Do not use the supports on this drawing for multiple support signs if supports are separated by more than 7 feet.
6. Treat all field cuts and field drilled holes in wood posts in accordance with Section 730-2.04 of the Standard Specifications.

## SIGN POST SPACING NOTES:

1. Install sign support in accordance with the table below, unless otherwise required by plans or specifications.
2. Exceptions:
   a. Use one post for all E5-1 gore signs, regardless of width.
   b. Use one 2.5" P.S.T. for all STOP signs, with or without street name signs.
3. Supports placed within 7' of each other must be acceptable for that use. See tables below for the sizes of wood posts and P.S.T.s that may be used within 7'. See Manufacturer's documentation for breakaway couplings and tubes that may be used within 7'.
4. See Standard Plan S-31 for frangible couplings, hinges, and foundations for tube and W-shape sign supports.

| WOOD SIGN POSTS | | | |
|---|---|---|---|
| SIZE | HOLE DIA. | EMBEDMENT* | NO. OF POSTS WITHIN 7 Ft. PATH |
| 4"x4" | NONE | 4'-1" | 2 |
| 4"x6" | 1 1/2" | 5'-3" | 2 |
| 6"x6" | 1 1/2" | 4'-9" | 1 |
| 6"x8" | 3" | 4'-9" | 1 |

* Embedment depth applies in both strong and weak soil.

WOOD POSTS

| PERFORATED STEEL TUBES (P.S.T.) | | |
|---|---|---|
| POST SIZE | Embedment Depth | No. of P.S.T.s permitted within 7 ft path |
| 1 1/2" x 1 1/2" | 4'-8" | 2 |
| 1 3/4" x 1 3/4" | 4'-6" | 2 |
| 2" x 2" | 4'-3" | 2 |
| 2 1/4" x 2 1/4" | 5'-0" | 1 |
| 2 1/2" x 2 1/2" | 4'-6" | 1 |

* Use 3"x3"x3/16" Stub for 2 1/2"x2 1/2" PST Applications.

PERFORATED STEEL TUBE (PST) POSTS

| TUBE SIGN POST SPACING | | | | | | | | |
|---|---|---|---|---|---|---|---|---|
| Sign Width (feet) | No. of Posts | Distance Between Posts | Sign Overhang | Post Type | | | | Notes |
| | | | | P.S.T. | Wood | Steel Tube | W-Shape | |
| 0.5 to 4.0 | 1 | - | 0.5W | X | X | X | | See Note 2. |
| 4.5 to 10.0 | 2 | 0.6W | 0.2W | X | X | X | | See Note 3. |
| 10.5 to 11.0 | 2 | 6 | Varies | X | X | X | | See Note 3. |
| 11.5 to 13.0 | 2 | 8 | Varies | | | | X | |
| 13.5 to 20.0 | 2 | 0.6W | 0.2W | | | | X | |
| 20.5 to 22.5 | 3 | 8 | Varies | | | | X | |
| 23.0 to 29.5 | 3 | 0.35W | 0.15W | | | | X | |
| 30.0 to 31.5 | 4 | 8 | Varies | | | | X | |
| 32.0 to 40.0 | 4 | 0.25W | 0.125W | | | | X | |

TUBE SIGN POST SPACING

Note: Drawing not to scale

State of Alaska DOT&PF
ALASKA STANDARD PLAN

LIGHT SIGN STRUCTURE
POST EMBEDMENT

Adopted as an Alaska Standard Plan by: Carolyn Morehouse
Carolyn Morehouse, P.E.
Chief Engineer

Adoption Date: 7/17/2020

Last Code and Stds. Review
By: WTH Date: 7/8/2020

Next Code and Standards Review date: 7/8/2030

NOTE:
Install hinges when more than one post is used to support a sign. Do not install hinges on single post installations.

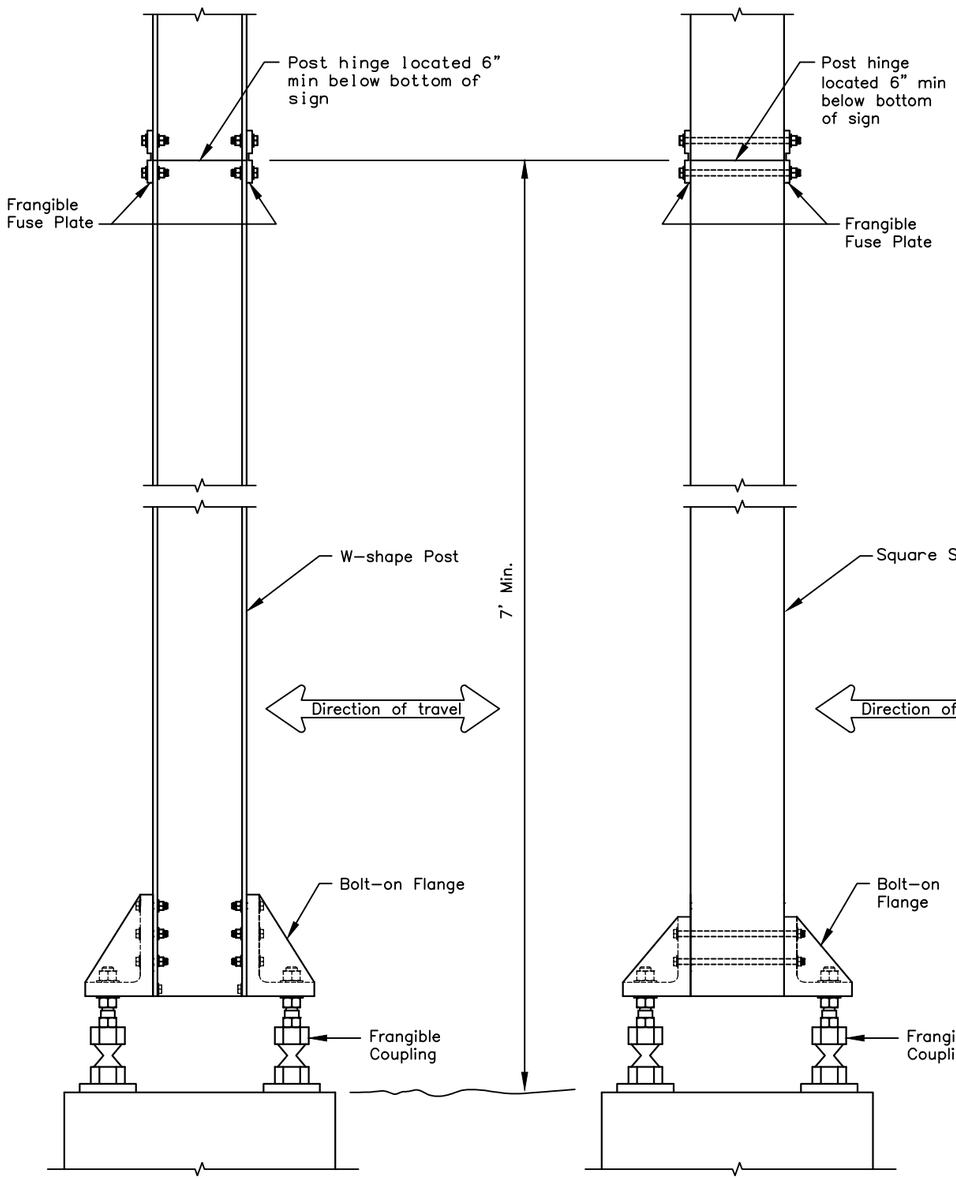


FRANGIBLE COUPLING SYSTEM FOR W-SHAPE POST

FRANGIBLE COUPLING SYSTEM FOR SQUARE STEEL TUBES

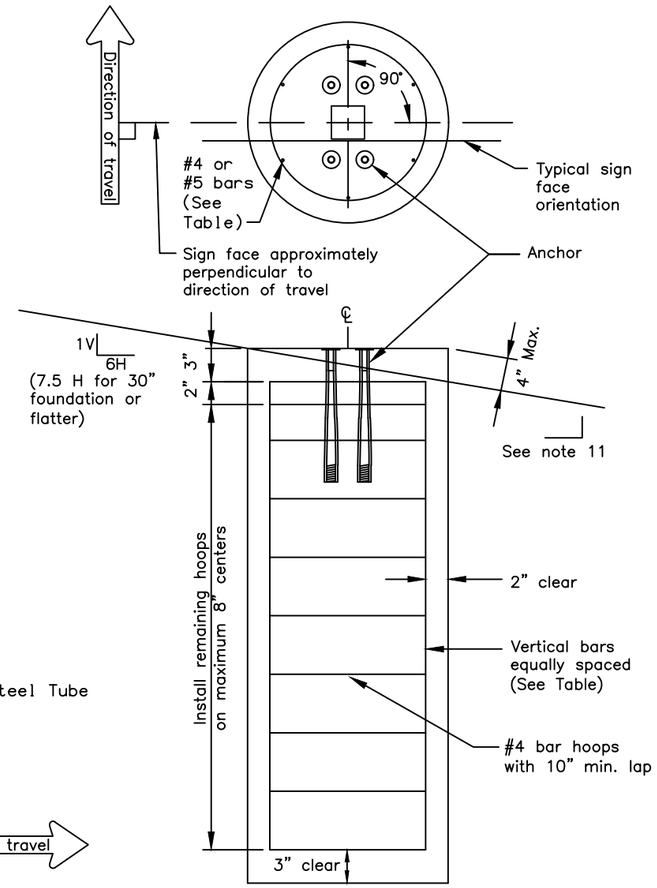


SIGN POST FOUNDATION
See Table for depth and diameter

| POST SIZE & TYPE | FOUNDATION * | | | REINFORCEMENT | | | | | |
|---|---|---|---|---|---|---|---|---|---|
| | DIA. | MIN. DEPTH | $CY^3$ CONC. | VERTICAL BARS | | | HOOPS | | |
| | | | | QTY. | SIZE | LGTH. | QTY. | SIZE | DIA. |
| 2 1/2" TUBE | 1'-6" | 6'-0" | 0.39 | 7 | #5 | 5'-6" | 10 | #4 | 1'-2" |
| 3" TUBE | 1'-6" | 6'-0" | 0.39 | 7 | #5 | 5'-6" | 10 | #4 | 1'-2" |
| 3 1/2" TUBE | 1'-6" | 6'-0" | 0.39 | 7 | #5 | 5'-6" | 10 | #4 | 1'-2" |
| 4" TUBE | 2'-6" | 6'-0" | 1.09 | 8 | #8 | 5'-6" | 10 | #4 | 2'-2" |
| 4 1/2" TUBE | 2'-6" | 6'-0" | 1.09 | 8 | #8 | 5'-6" | 10 | #4 | 2'-2" |
| 5" TUBE | 2'-6" | 6'-0" | 1.09 | 8 | #8 | 5'-6" | 10 | #4 | 2'-2" |
| | | | | | | | | | |
| W6 x 9 | 2'-6" | 6'-0" | 1.09 | 8 | #8 | 5'-6" | 10 | #4 | 2'-2" |
| W6 x 12 | 2'-6" | 6'-0" | 1.09 | 8 | #8 | 5'-6" | 10 | #4 | 2'-2" |
| W6 x 15 | 3'-0" | 6'-6" | 1.70 | 8 | #11 | 6'-0" | 12 | #4 | 2'-8" |
| W6 x 30 | 3'-0" | 7'-6" | 1.96 | 8 | #11 | 7'-0" | 13 | #4 | 2'-8" |

FOUNDATION TABLE

* Foundations sized for use where there are no loose, high moisture, or fine grained soils.

## GENERAL NOTES

1. Furnish sign posts with NCHRP 350 compliant frangible couplings designed to break away safely when struck from any direction. There is no MASH compliant device at this time. See SPDR report for more info.
2. Furnish frangible coupling systems with bolt-on flanges.
3. Details on this sheet illustrate only the general components of a frangible coupling system, and are not intended to specify a particular product.
4. Install frangible fuse plates as specified by the manufacturer and hinged joints when multiple posts are used to support a sign. Do not use round pipes.
5. Install the components of the breakaway system, including hinges, in accordance with the written instructions of the system manufacturer.
6. Use Class A, B or W concrete conforming to Sections 501 or 550 of the Standard Specifications. Furnish ASTM A615 grade 60 steel bars for concrete reinforcement conforming to AASHTO M31.
7. Spiral reinforcing steel may be substituted for hoops in concrete foundation. Spiral option shall consist of #3 plain spiral with 6" pitch with three flat turns at the top and one flat turn at the bottom.
8. Install the concrete anchors using a rigid template. Locate the anchors on centers and within tolerances specified by the manufacturer.
9. Install the anchors in fresh concrete as recommended by the manufacturer. Adjust the template's final position until it is level. Remove and replace all foundations that need more than 2 shims under any 1 coupling or more than a total of 3 shims under any pair of couplings to plumb the post.
10. Drill the holes for attaching brackets before the sign posts are hot dip galvanized. Test fit templates in the holes to ensure the brackets can be installed square to the posts.
11. Special grading detail and/or shielding may be required to maintain 4" maximum clear distance.

State of Alaska DOT&PF
ALASKA STANDARD PLAN

SIGN POST BASE AND FOUNDATION

Adopted as an Alaska Standard Plan by: Carolyn Morehouse
Carolyn Morehouse, P.E.
Chief Engineer

Adoption Date: 7/17/2020

Last Code and Stds. Review
By: KLK, MJM Date: 7/8/2020

Next Code and Standards Review Date: 7/8/2030

S-31.02

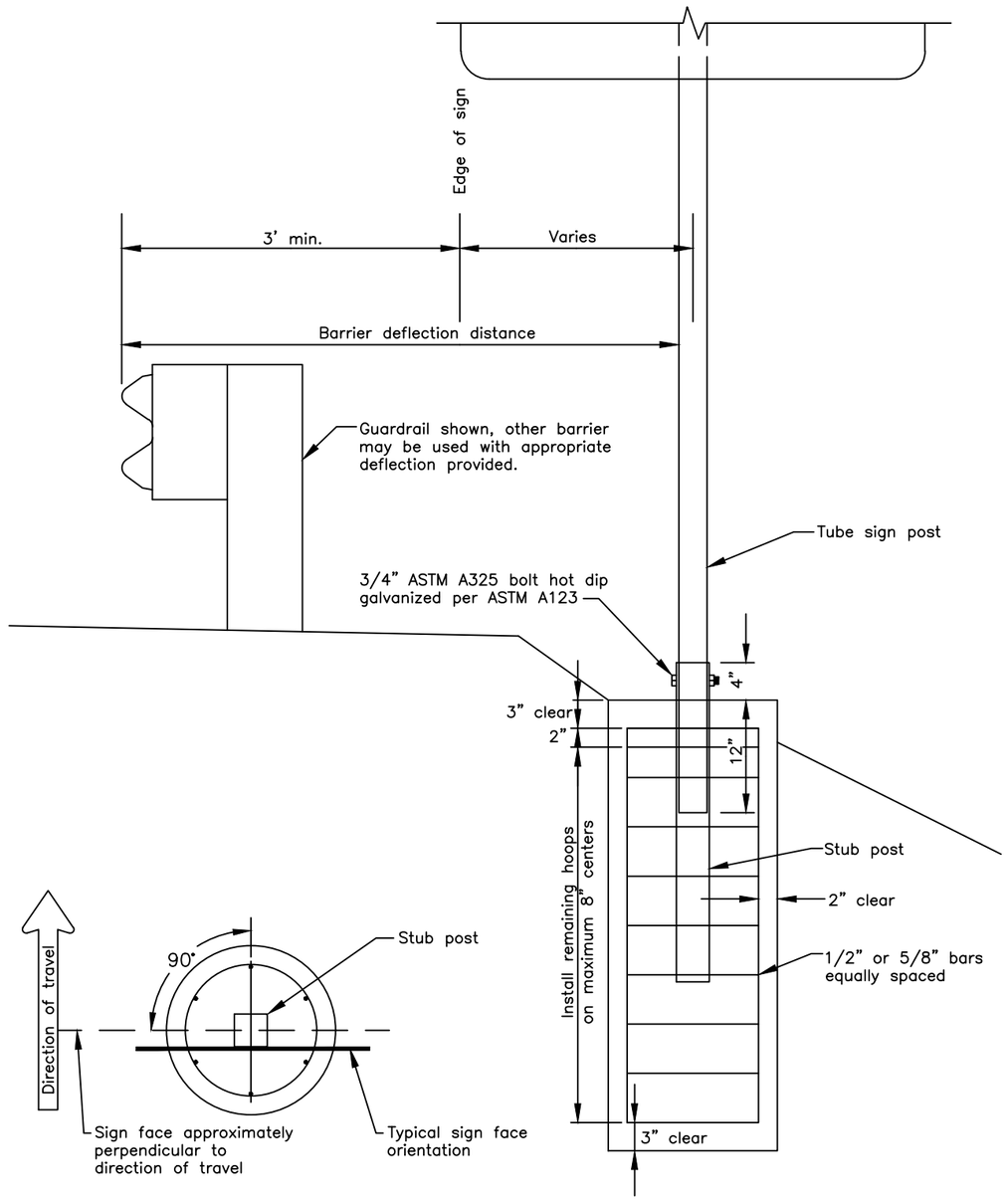


SIGN POST FOUNDATION
(Plan view)

SIGN POST FOUNDATION
See table for depth and diameter

## GENERAL NOTES

1. This is a non–crashworthy sign support. It may only be used at locations shielded by a guardrail, barrier, or wall. It may not be used if the sign post is within 20' of the rail and is closer than 75' from the guardrail end post (measured along the rail). For this case use a breakaway sign support. See Standard Plan G–20.
2. Furnish steel tube sign post and stub post that conform to ASTM A500, grade B, and meet ASTM A123 for hot dip galvanizing.
3. Install tubes and stub post with a 0.1875" wall thickness.
4. For Perforated Tubes use Standard Plan S–30.
5. Spiral reinforcing steel may be substituted for hoops in concrete foundation. Spiral option shall consist of No. 3 plain spiral with 6" pitch with three flat turns at the top and one flat turn at the bottom.
6. Use Class A, B or W concrete.

| POST SIZE & TYPE | FOUNDATION * | | | REINFORCEMENT | | | | | STUB POST | |
|---|---|---|---|---|---|---|---|---|---|---|
| | | | | VERTICAL BARS | | | HOOPS | | SLEEVE | |
| | DIA. | MIN. DEPTH | C.Y. CONC. | QTY. | SIZE | LGTH. | SIZE | DIA. | SIZE | LGTH. |
| 2 1/2" TUBE | 1'–0" | 4'–6" | 0.13 | 6 | #4 | 4'–0" | #4 | 8" | 3" | 3' |
| 3" TUBE | 1'–6" | 4'–0" | 0.25 | 7 | #5 | 3'–6" | #4 | 1'–2" | 3 1/2" | 3' |
| 3 1/2" TUBE | 1'–6" | 4'–6" | 0.27 | 7 | #5 | 4'–0" | #4 | 1'–2" | 4" | 3' |
| 4" TUBE | 2'–6" | 4'–0" | 0.69 | 8 | #8 | 3'–6" | #4 | 2'–2" | 4 1/2" | 3' |
| 4 1/2" TUBE | 2'–6" | 4'–6" | 0.78 | 8 | #8 | 4'–0" | #4 | 2'–2" | 5" | 3' |

* Foundation sized for use where there are no loose, high moisture, or fine grained soil.

State of Alaska DOT&PF
ALASKA STANDARD PLAN

SIGN POST BASE AND FOUNDATION BEHIND BARRIER

Adopted as an Alaska Standard Plan by: Carolyn Morehouse
Carolyn Morehouse, P.E.
Chief Engineer

Adoption Date: 7/17/2020

Last Code and Stds. Review
By: KLK Date: 7/8/2020

Next Code and Standards Review Date: 7/8/2030

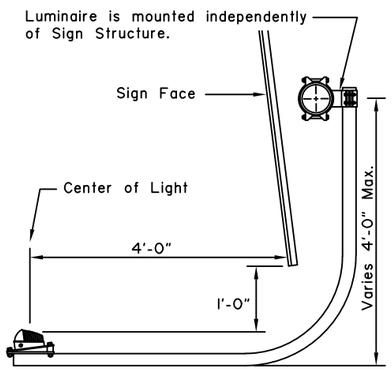


SINGLE BEAM LUMINAIRE MOUNTING

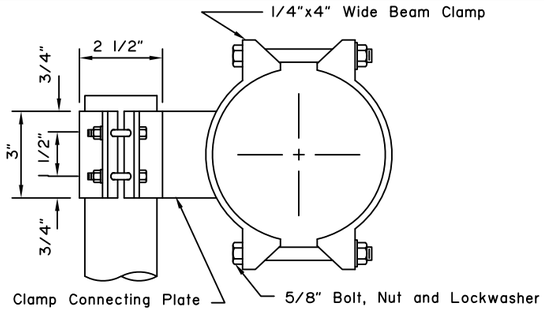


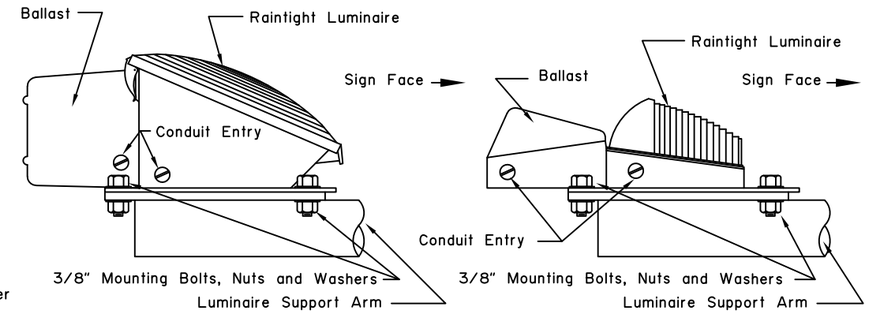


TYPICAL LUMINAIRE ASSEMBLIES

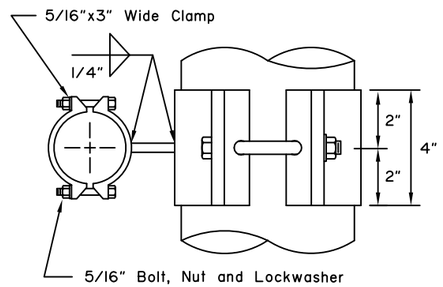


LUMINAIRE MOUNTING CLAMP ASSEMBLY

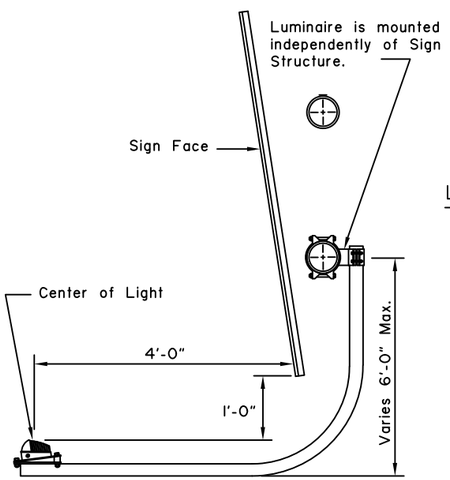


DOUBLE BEAM LUMINAIRE MOUNTING

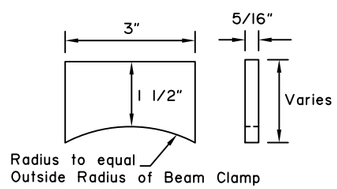


CLAMP CONNECTING PLATE

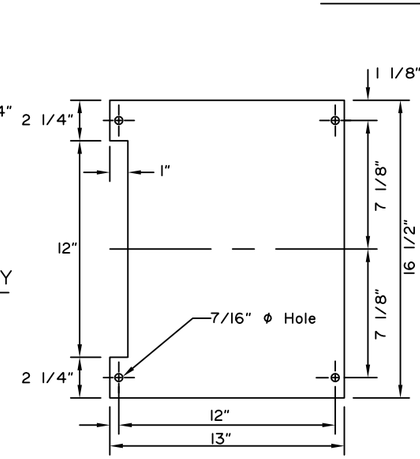


MOUNTING PLATE

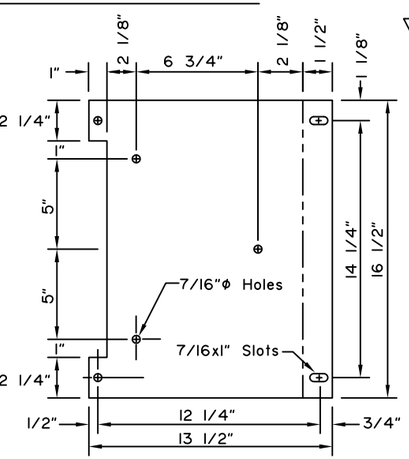


MOUNTING BRACKET

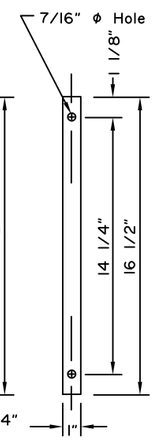


SHIM

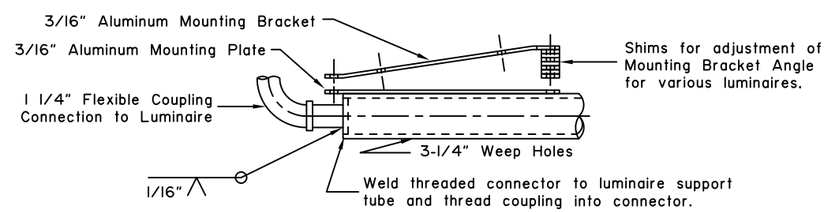


MOUNTING PLATE AND BRACKET DETAILS

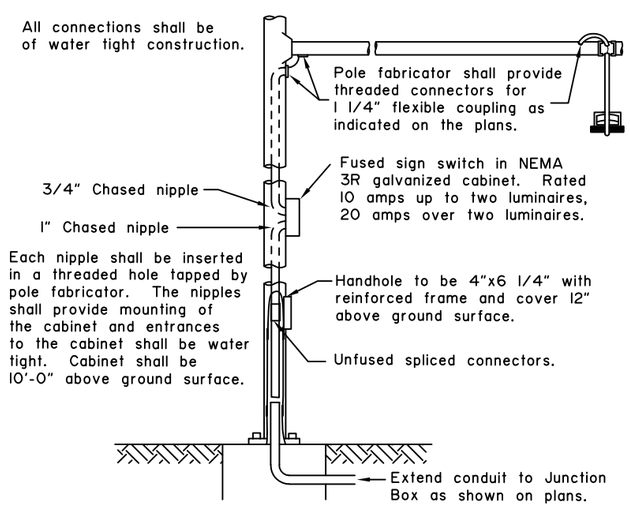


ELECTRICAL ASSEMBLY DETAILS

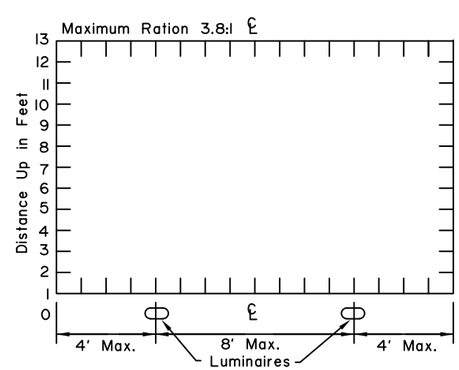


MINIMUM MERCURY LUMINAIRE REQUIREMENTS

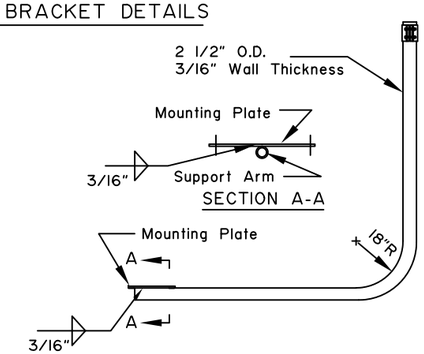


LUMINAIRE SUPPORT ARM AND PLATE

## GENERAL NOTES:

1. Details shown are to indicate general design only. Dimensions and design may vary among the manufacturers.
2. Luminaires shall use 250 watt color improved mercury vapor lamps.
3. Minimum clearance of luminaire and/or sign from travel way shall be 17'6" except where existing structure is lower, in which case it shall be no lower than the existing structure. Height, location and number of luminaires and/or signs shall be specified on the plans.
4. Structural angles, plates, brackets, bends, clamps and fasteners shall be Aluminum Alloy 6061-T6, High Strength Low Alloy Structural Steel ASTM A242, or Steel ASTM A36. Bolts, nuts and washers shall be Aluminum Alloy 2024-T4 or High Strength Steel ASTM A325.
5. All angles, plates, tubing, brackets and fasteners requiring fabrication, welding, bending or riveting shall be shop fabricated to AASHTO Specifications with ASCE Specifications for Design and Construction of Structural Supports for Highway Signs by AASHTO.
6. Assemblies of aluminum in contact with dissimilar metals to be avoided where possible. Aluminum placed in contact with dissimilar metal shall be painted to ASCE Specification 6061 Part II, Section 1-6. All ferrous metals shall be galvanized in accordance with ASTM A123 and ASTM A153. Painting of metal surfaces shall conform to Section 708 of the State of Alaska, Standard Specifications for Highway Construction, latest edition.

State of Alaska DOT&PF
ALASKA STANDARD PLAN

**OVERHEAD SIGN MOUNTING**

Adopted as an Alaska Standard Plan by: Kenneth J. Fisher, P.E.
Chief Engineer

Adoption Date: 02/08/2019

Last Code and Stds. Review
By: Date:

Next Code and Standards Review date: 02/08/2029

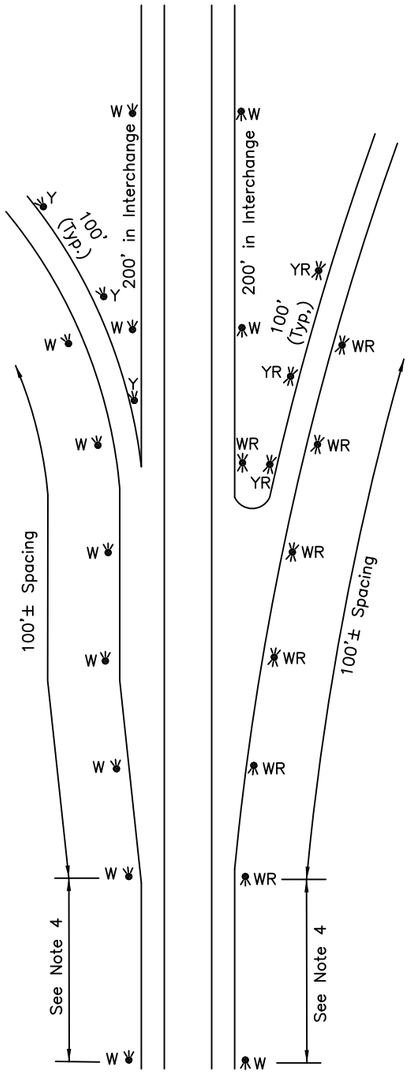


FREEWAY RAMPS

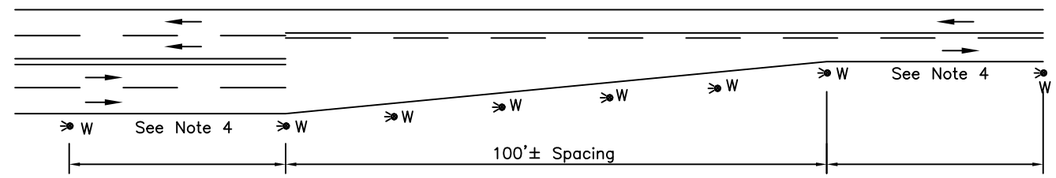


TWO WAY ROAD – LANE REDUCTION CONDITION

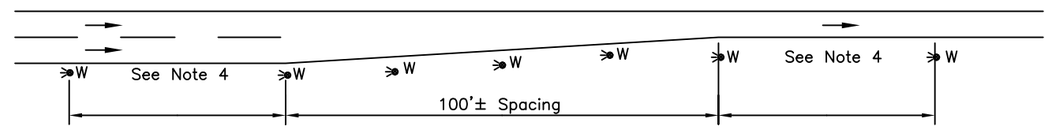


ONE WAY ROAD – RIGHT LANE DROP CONDITION
(FOR LEFT LANE DROP CONDITION USE TYPE Y MARKERS)

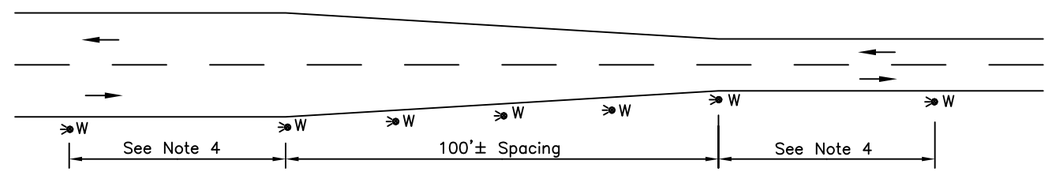


TWO WAY ROAD – NARROWING CONDITION

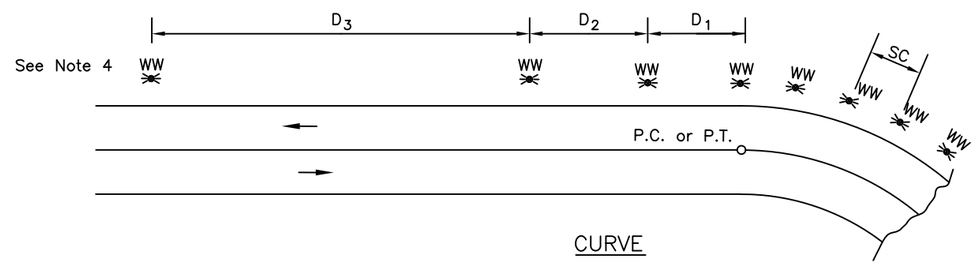


CURVE

| SPACING ON CURVES | | | | |
|---|---|---|---|---|
| RADIUS FT | SPACING ON CURVE | SPACING IN ADVANCE AND BEYOND CURVE | | |
| | | FIRST | SECOND | THIRD |
| R | SC | $D_1$ | $D_2$ | $D_3$ |
| 1,000' | 90' | 160' | 270' | 300' |
| 900' | 85' | 155' | 250' | 300' |
| 800' | 80' | 145' | 240' | 300' |
| 700' | 75' | 135' | 225' | 300' |
| 600' | 70' | 125' | 210' | 300' |
| 500' | 65' | 115' | 195' | 300' |
| 400' | 55' | 100' | 165' | 300' |
| 300' | 50' | 90' | 150' | 300' |
| 250' | 40' | 70' | 120' | 240' |
| 180' | 35' | 65' | 105' | 210' |
| 115' | 25' | 55' | 90' | 180' |
| 50' | 20' | 35' | 60' | 120' |

| GUIDE MARKER REFLECTORS | | |
|---|---|---|
| TYPE | FRONT COLOR | BACK COLOR |
| WW | WHITE | WHITE |
| W | WHITE | -- |
| Y | YELLOW | -- |
| YY | YELLOW | YELLOW |
| WR | WHITE | RED |
| YR | YELLOW | RED |

## GENERAL NOTES

1. Maximum spacing on tapers, speed change lanes, pavement transitions, and ramps should be 100'±.
2. On roads with continuous delineation, adjust existing guide marker locations to tie into these configurations.
3. Marker spacing in table has been rounded for ease of calculation and field layout.
4. Spacing on tangents should be approximately 500', 530' maximum. See table for spacing on curves.

State of Alaska DOT&PF
ALASKA STANDARD PLAN

**GUIDE MARKER PLACEMENT**

Adopted as an Alaska Standard Plan by: Kenneth J. Fisher, P.E.
Chief Engineer

Adoption Date: 02/08/2019

Last Code and Stds. Review
By: Date:

Next Code and Standards Review date:02/08/2029

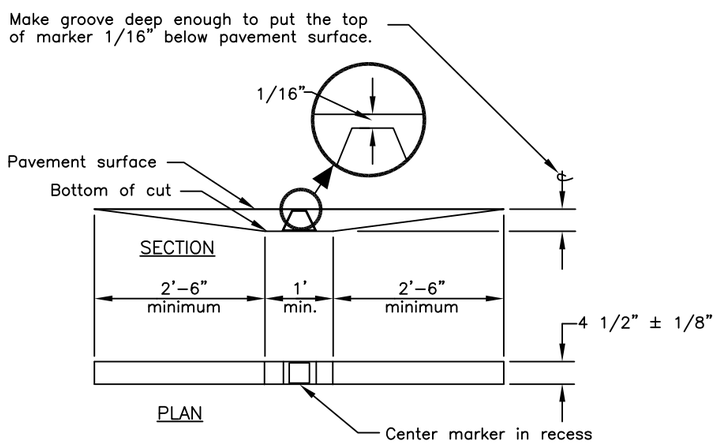


RECESSED PAVEMENT MARKER SLOT

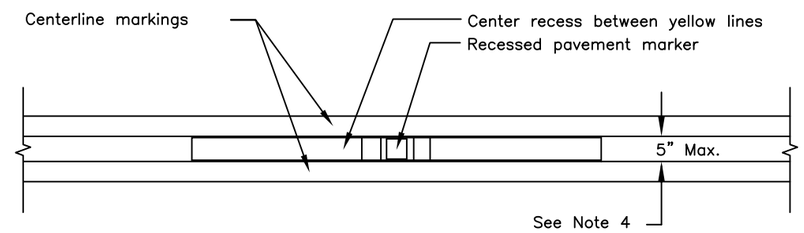


RECESSED PAVEMENT MARKERS WITH DOUBLE CENTERLINE INSTALLATION

## GENERAL NOTES

1. Install recessed pavement markers spaced at 80' on tangent sections of roadway and on curves with a radius greater than 1,600'.
2. Install recessed pavement markers spaced at 40' on curves with a radius 1,600' or less.
3. Install recessed pavement markers between the lines on sections with double lines (either broken or solid.)
4. Increase the distance between yellow painted lines from the standard 3" up to a maximum of 5" to minimize paint overspray onto the marker.
5. Install recessed pavement markers on the centerline of the line, midpoint between stripe segments on sections with single broken lines.
6. Install reflectors of the same color as the pavement markings they supplement, except when red reflectors are specified on the departure side of markers on one-way roads to warn motorists they are going the wrong way.
7. Unless otherwise specified on one-way roads, reflectors are required only on the approaching traffic side of markers. In these cases, the 2'-6" taper may be omitted on the departure side.

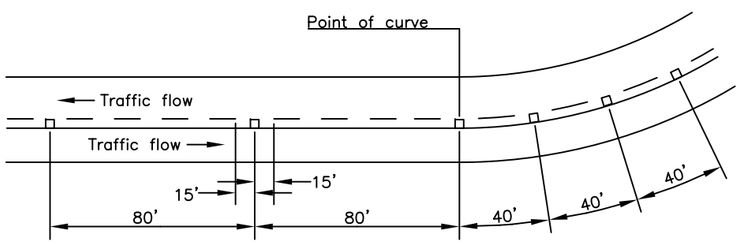


RECESSED PAVEMENT MARKERS ON CURVES WITH A RADIUS LESS THAN 1,600'

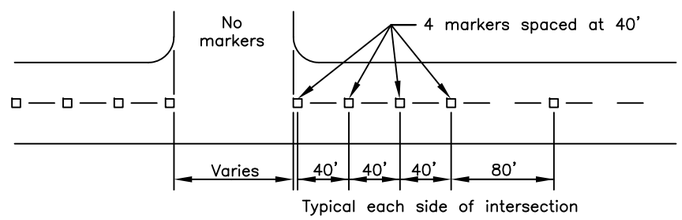


RECESSED PAVEMENT MARKERS AT INTERSECTION APPROACHES

State of Alaska DOT&PF
ALASKA STANDARD PLAN

**RECESSED PAVEMENT MARKERS**

Adopted as an Alaska Standard Plan by: Kenneth J. Fisher, P.E.
Chief Engineer

Adoption Date: 02/08/2019

Last Code and Stds. Review
By: Date:

Next Code and Standards Review date:02/08/2029

# T-20.04

SHEET | of |

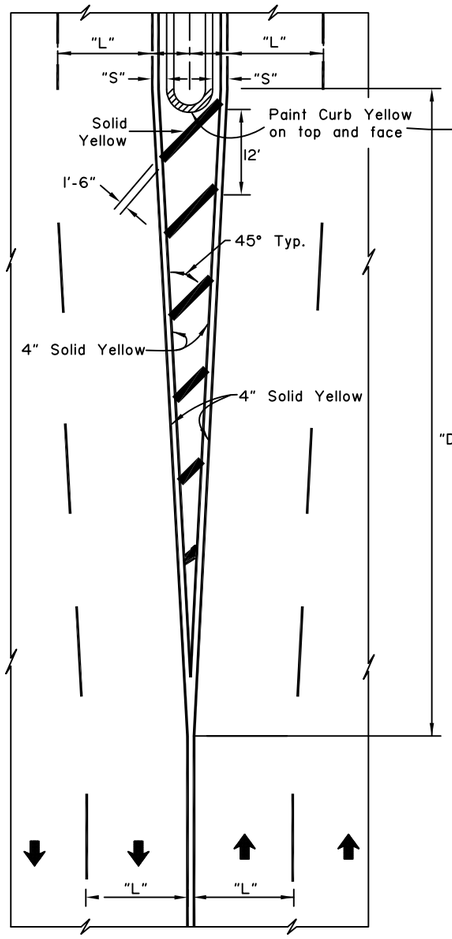


FOUR OR MORE LANES
DRIVE TO RIGHT

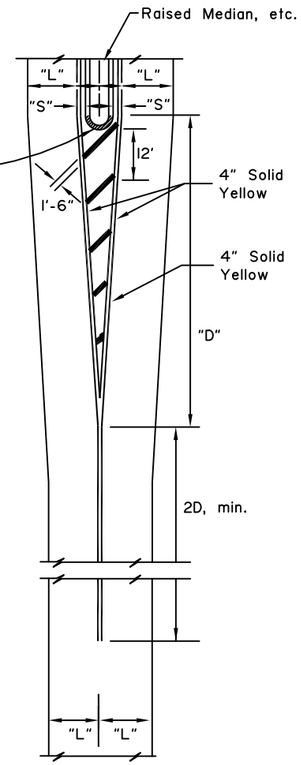


TWO LANES
DRIVE TO RIGHT

White longitudinal and diagonal markers identical to Four Lane Arrangement.

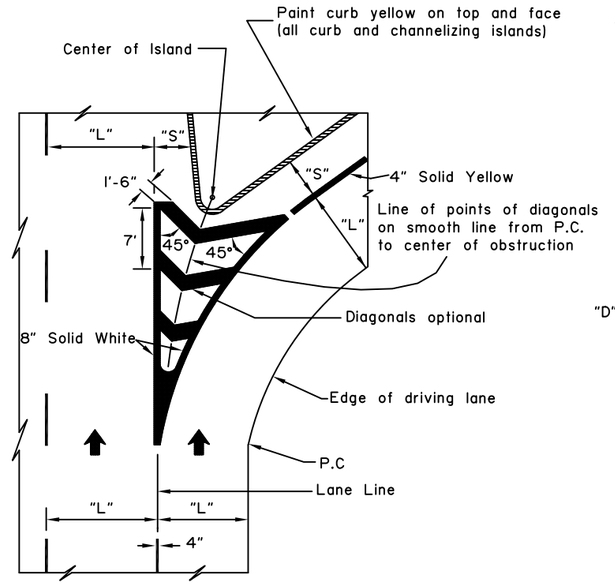


CHANNELIZING ISLAND

NOTES: "D" = Speed limit (mph) X "S" (offset width in feet) or as indicated on the plans. Minimum "D" = 100 feet urban, 200 feet rural.

APPROACH TO OBSTRUCTIONS

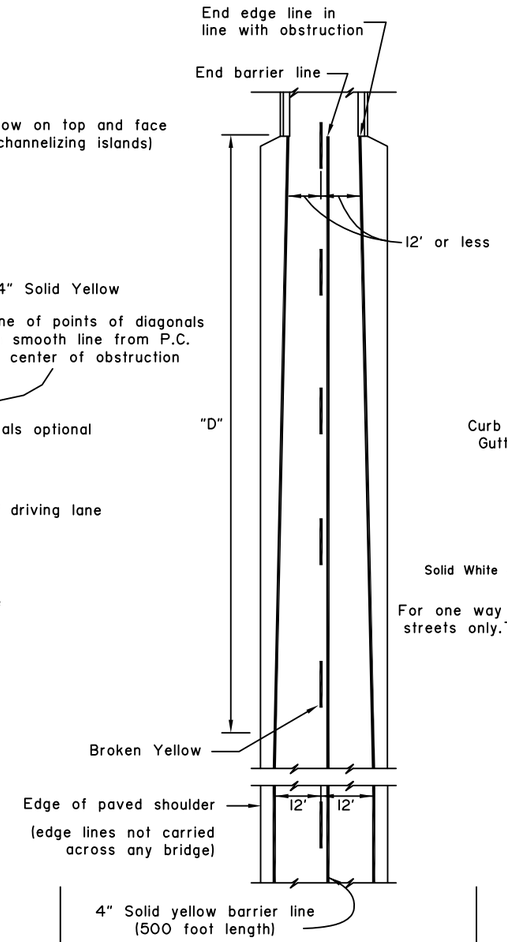


Note: On bridges over 24' wide use standard pavement markings. Barrier lines not used unless otherwise required.

EDGE LINE TRANSITION TO NARROW BRIDGE AND APPROACH BARRIER LINE

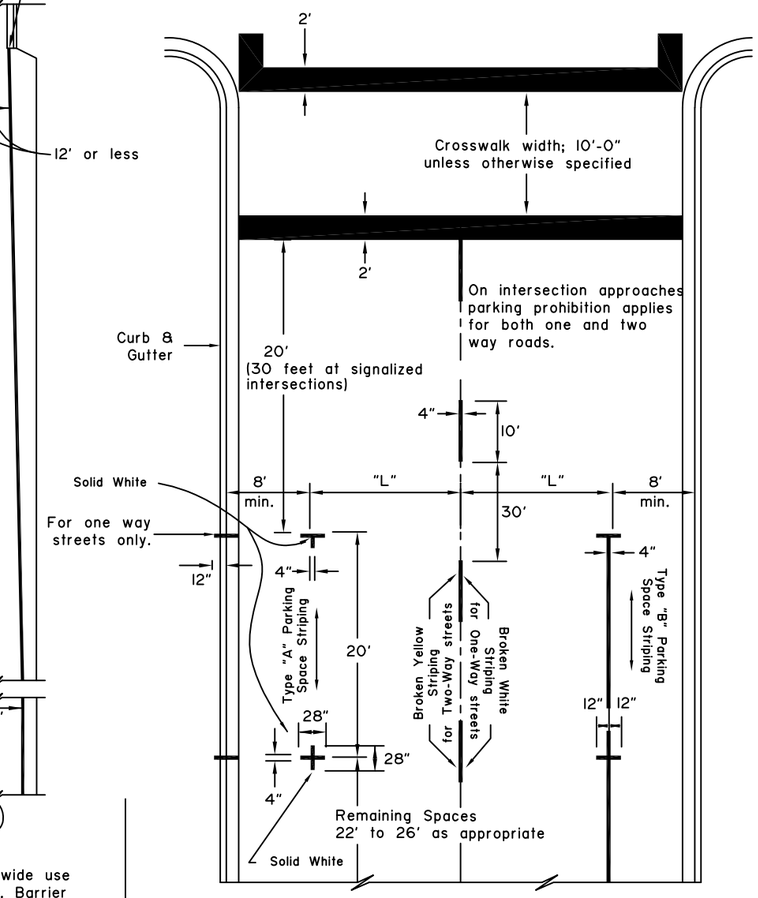


CENTERLINES FOR TWO LANE TWO WAY URBAN ROADS-PARKING LIMIT LINES

RAILROAD CROSSING NOTES:

1. All markings solid while unless indicated otherwise.
2. On 4-lane roadways place railroad crossing approach markings in each lane of the approach.
3. Locate Stop Bar 15' from railroad track or 8' from gate, if present.
4. Place edge lines and lane lines on a uni-directional approach in a normal manner except that the lane line(s) shall be solid 4" white in lieu of broken for a distance of (D+60') in advance of the stop bands.

| POSTED LIMIT | D |
|---|---|
| 30 M.P.H. | 225' |
| 40 | 350' |
| 50 | 475' |
| 60 | 625' |

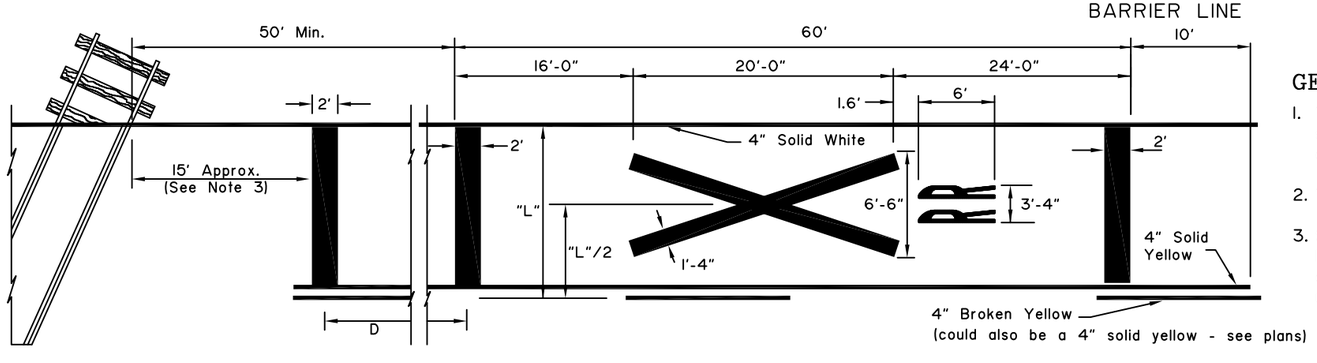


APPROACH TO RAILROAD CROSSING ON 2 LANE 2 WAY HIGHWAY

GENERAL NOTES:

1. "S"= offset distance as shown on the plans, otherwise 1 to 2 feet.
2. "L"= driving lane width.
3. See the Alaska Traffic Manual for additional guidance and/or restrictions on the use of traffic control devices.

NOT TO SCALE

State of Alaska DOT&PF
ALASKA STANDARD PLAN

**PAVEMENT MAKING APPLICATIONS**

Adopted as an Alaska Standard Plan by: Kenneth J. Fisher, P.E.
Chief Engineer

Adoption Date: 02/08/2019

Last Code and Stds. Review
By: Date:

Next Code and Standards Review date: 02/08/2029

T-20.04

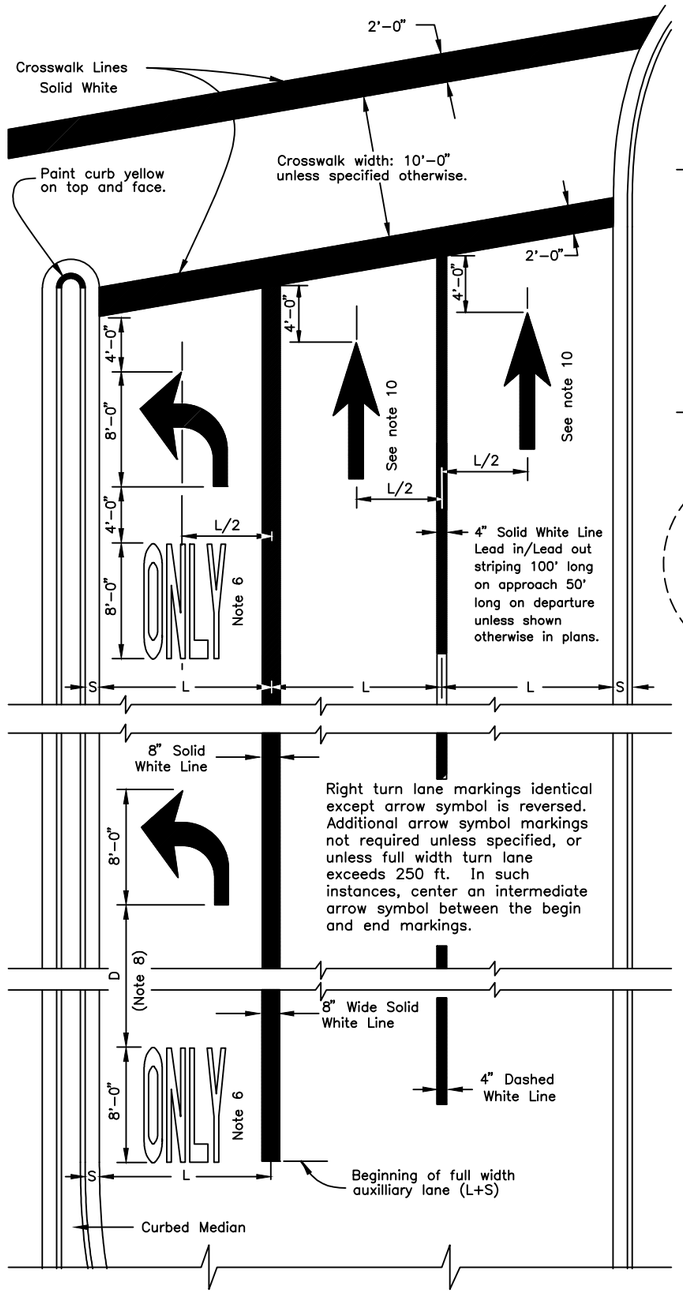


APPROACH TO INTERSECTION

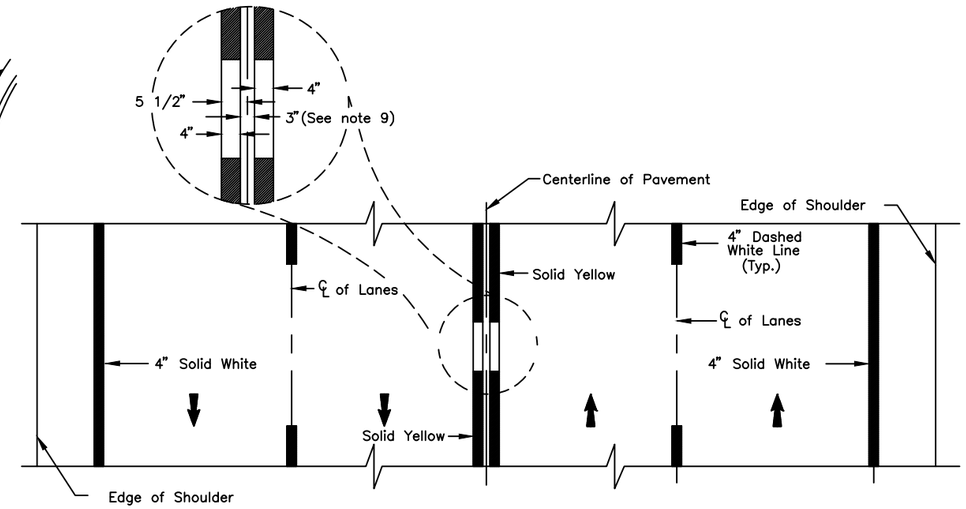


FOUR LANE TWO WAY

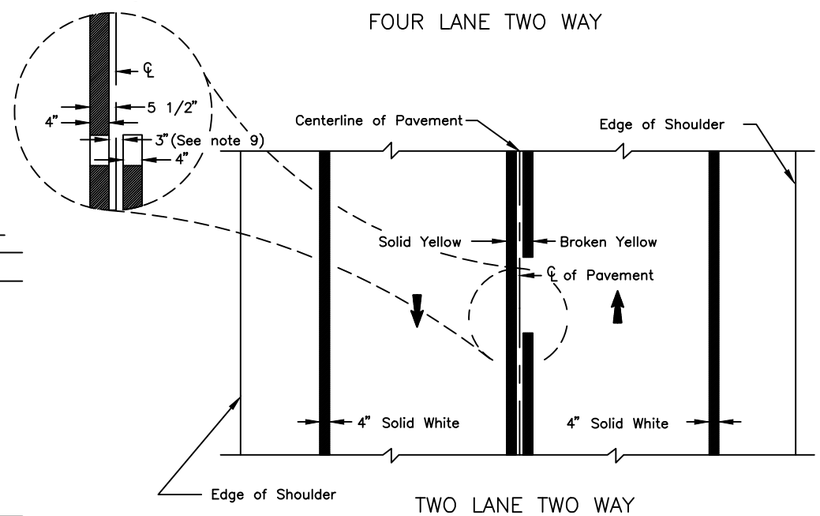


TWO LANE TWO WAY

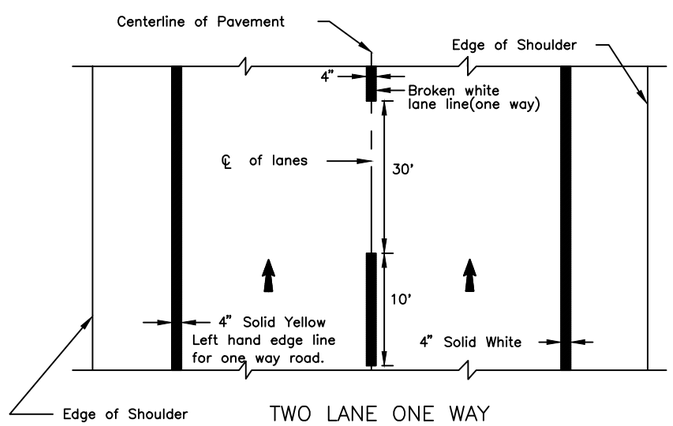


TWO LANE ONE WAY

## GENERAL NOTES:

1. All markings white unless indicated otherwise.
2. Lengths of stripe and gap for lane and center lines identical.
3. Lane lines for auxiliary lanes are unbroken solid lines.
4. "L" = driving lane width.
5. "S" = shy distance as shown on plans, otherwise 1 to 2 feet.
6. ONLY markings are required where through lanes change to turn lanes. In other cases, apply ONLY markings as indicated on plans.
7. See ALASKA TRAFFIC MANUAL for additional instruction on the use of TRAFFIC CONTROL DEVICES.
8. Adjust distance D between ONLY and Turn Arrow based on SPEED vs. D table. Table may be used for spacing between pairs of TWLT markings.
9. Adjust centerline spacing from 3" up to 5" where recessed pavement markers are required.
10. Arrows and symbols are used for through lanes only when the lane layout deviates from the normal intersection rules, and shall only be used where indicated in the plans.

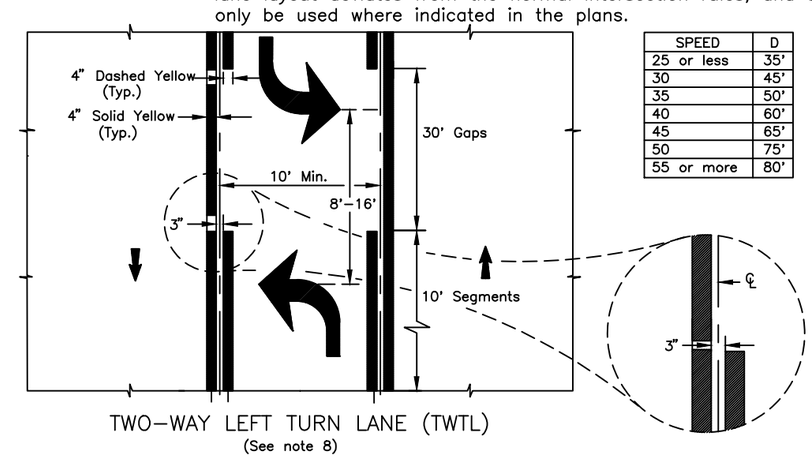


TWO-WAY LEFT TURN LANE (TWTL)
(See note 8)

| SPEED | D |
|---|---|
| 25 or less | 35' |
| 30 | 45' |
| 35 | 50' |
| 40 | 60' |
| 45 | 65' |
| 50 | 75' |
| 55 or more | 80' |

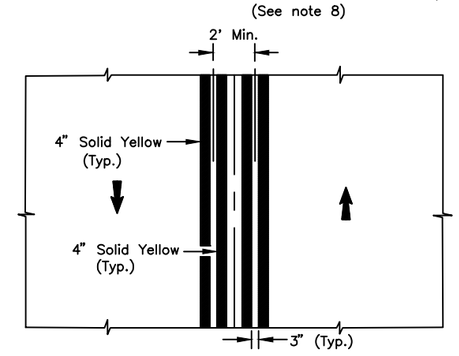


STRIPED MEDIAN

State of Alaska DOT&PF
ALASKA STANDARD PLAN

PAVEMENT MARKING APPLICATIONS

Adopted as an Alaska Standard Plan by: Carolyn Morehouse
Carolyn Morehouse, P.E.
Chief Engineer

Adoption Date: 7/17/2020

Last Code and Stds. Review
By: KLK Date: 7/8/2020

Next Code and Standards Review Date: 7/8/2030

T-21.04

| T-22.04 | SHEET 1 of 1 |
|---|---|

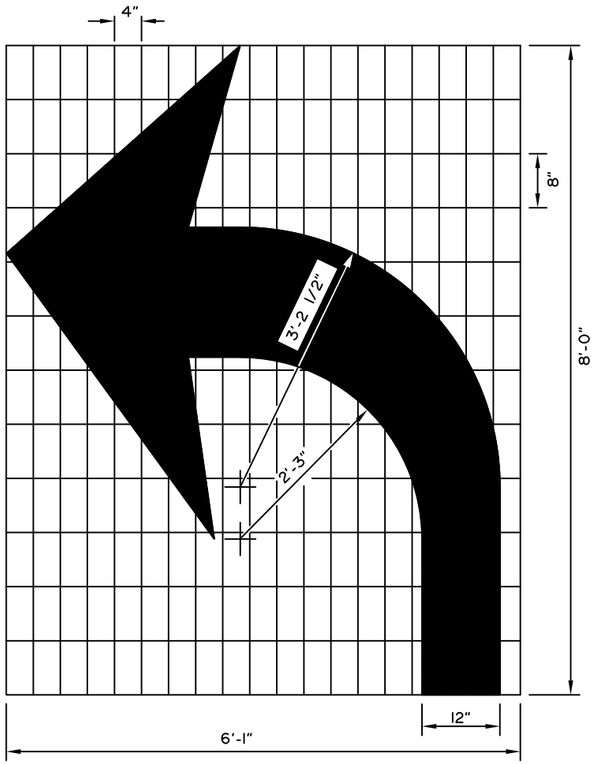


Right turn auxilliary lane usage markings identical except arrow symbol is reversed.

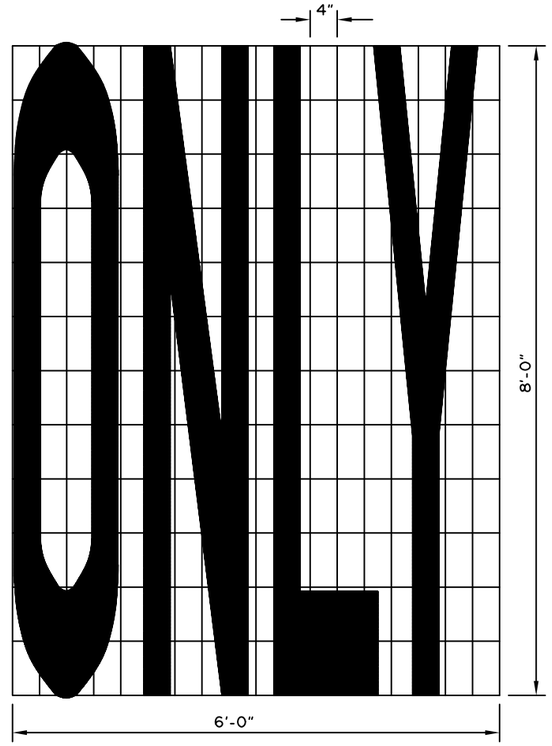


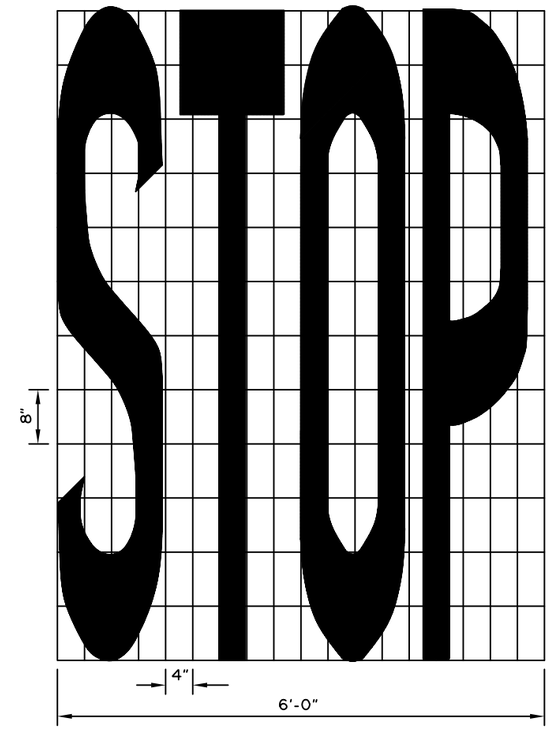


LAYOUT TEMPLATES FOR STENCILS

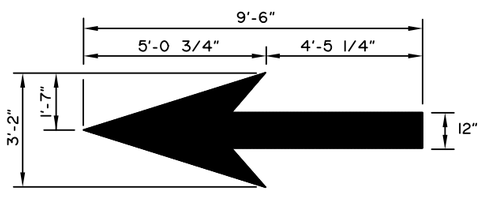


STRAIGHT AHEAD ARROW

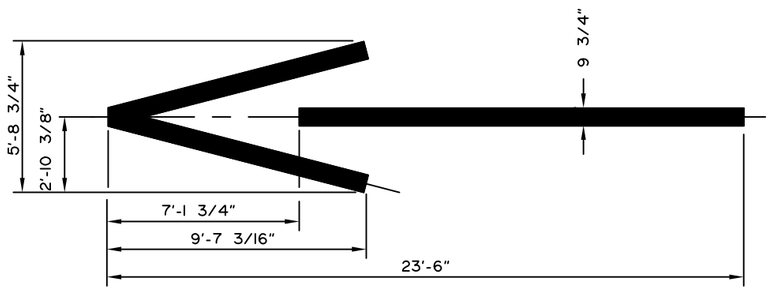


WRONG WAY ARROW

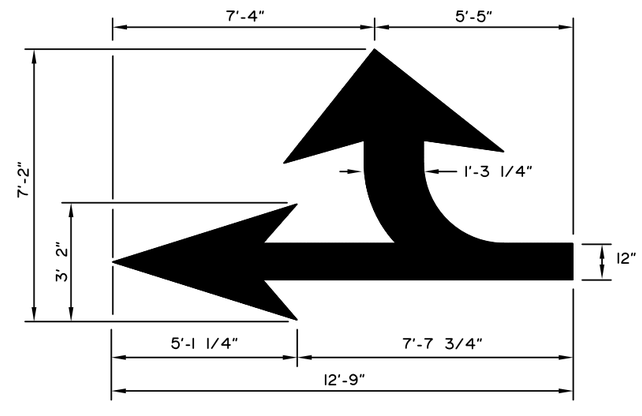


COMBINATION ARROW

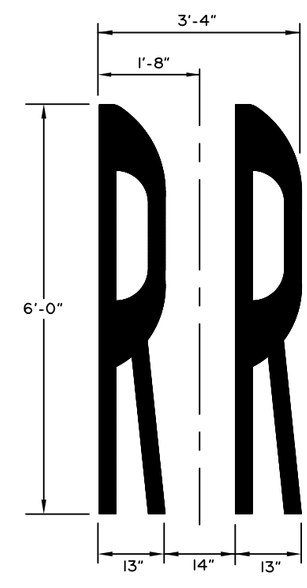


RAILROAD SYMBOL

## GENERAL NOTES:

1. All symbols shown shall be white and reflectorized in accordance with the Special Provisions.
2. See the Alaska Sign Design Specifications (ASDS) for lettering and symbols for pavement marking details not provided on this drawing.

State of Alaska DOT&PF
ALASKA STANDARD PLAN

**PAVEMENT MARKING SYMBOL DIMENSIONS**

Adopted as an Alaska Standard Plan by: Kenneth J. Fisher, P.E.
Chief Engineer

Adoption Date: 02/08/2019

Last Code and Stds. Review
By: Date:

Next Code and Standards Review date: 02/08/2029

T-22.04

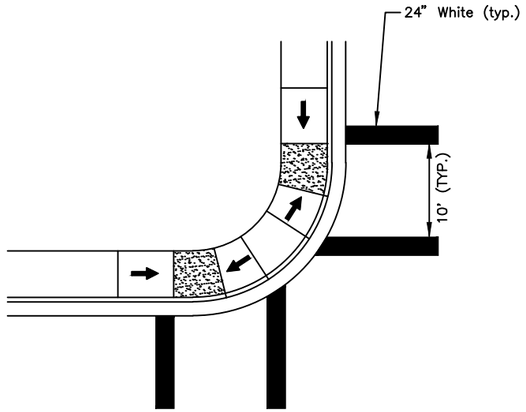


CASE 1

Dual Curb Ramps
Radius ≦ 25'

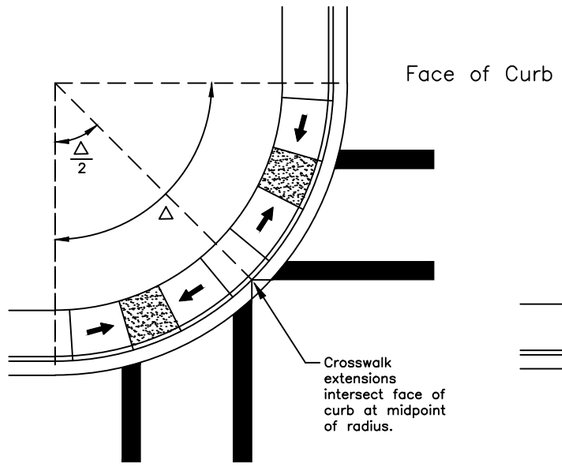


CASE 2

Dual Curb Ramps
25' < Radius ≦ 50'

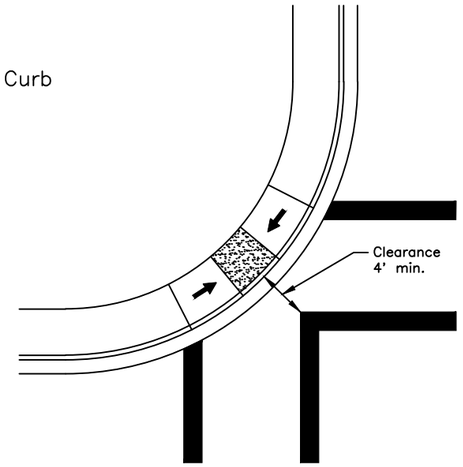


CASE 3

Single Central Curb Ramp
25' ≦ Radius ≦ 50'
(Not Recommended)

## GENERAL NOTES

1. The crosswalk locations shown assume a 90–degree intersection – adjust as necessary on skewed intersections to ensure that crosswalk landings (for parallel curb ramps) or ramp runs (for perpendicular curb ramps) fall within the inner edges of crosswalk stripes. If Case 3 (not recommended) is used, the layout should also be adjusted to provide at least the minimum clearance while maximizing the offset.
2. If only one crosswalk connects with a curb radius, it should be located as if there were two connecting crosswalks.
3. These details apply to parallel (shown) as well as perpendicular curb ramps.
4. Case 3, the layout for a single central curb ramp, should be used only when installing two ramps is not feasible. It should not be used for radii under 25 feet. See plans for ramp layout at particular locations.
5. Radius is measured to the face of curb.

State of Alaska DOT&PF
ALASKA STANDARD PLAN

CROSSWALK LOCATION AT SIGNALIZED INTERSECTIONS

Adopted as an Alaska Standard Plan by: Carolyn Morehouse
Carolyn Morehouse, P.E.
Chief Engineer

Adoption Date: 7/17/2020

Last Code and Stds. Review
By: KLK Date: 7/8/2020

Next Code and Standards Review Date: 7/8/2030

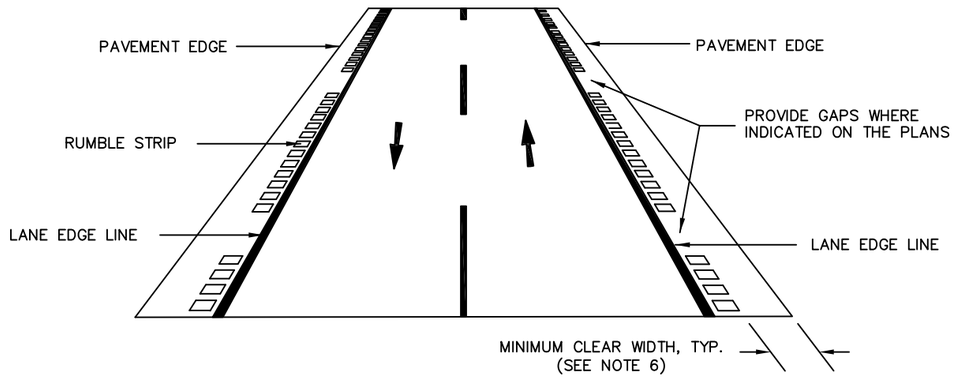


TYPICAL SHOULDER INSTALLATION – TWO-WAY

PERSPECTIVE VIEW

APPLIES TO TWO-WAY OPERATION WHERE BICYCLES ARE ALLOWED

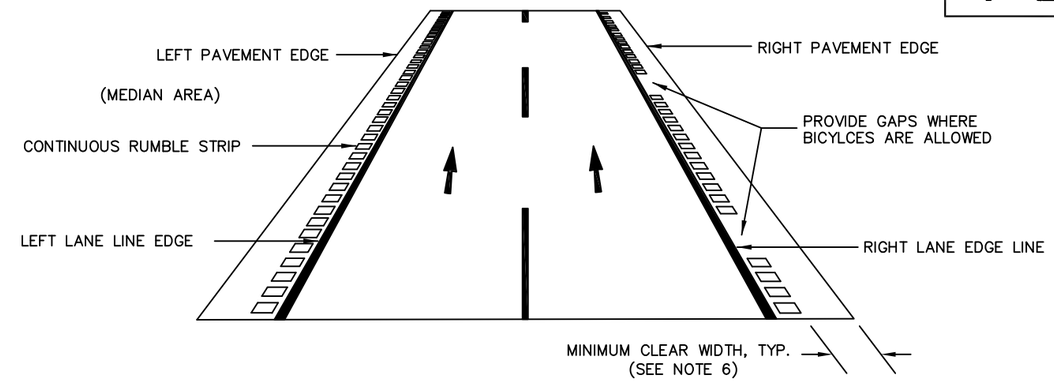


TYPICAL SHOULDER INSTALLATION – ONE-WAY DIVIDED

PERSPECTIVE VIEW

APPLIES TO ONE-WAY DIVIDED HIGHWAYS WHERE BICYCLES ARE ALLOWED

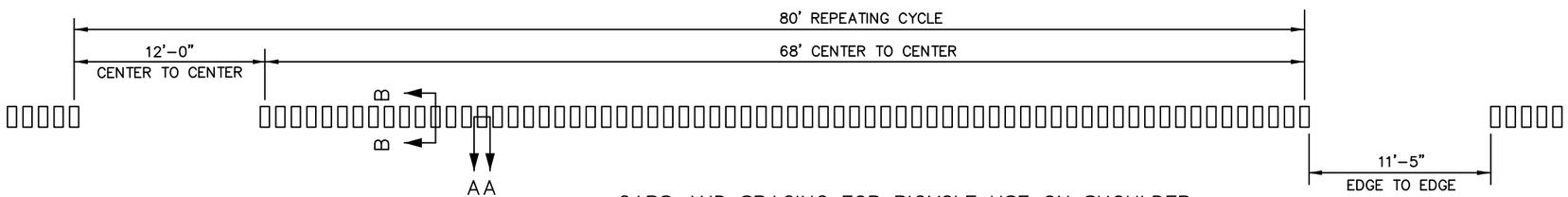


GAPS AND SPACING FOR BICYCLE USE ON SHOULDER

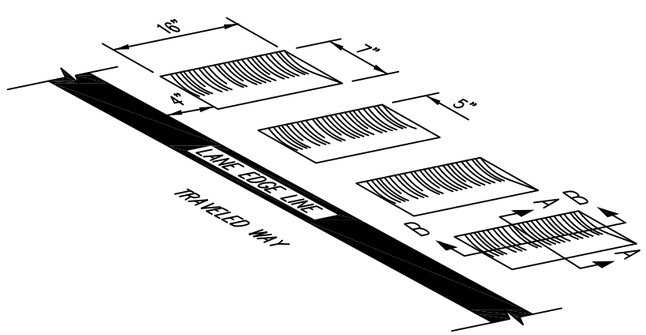


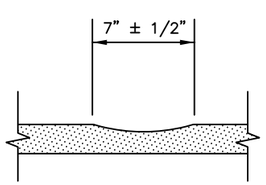


SECTION A–A

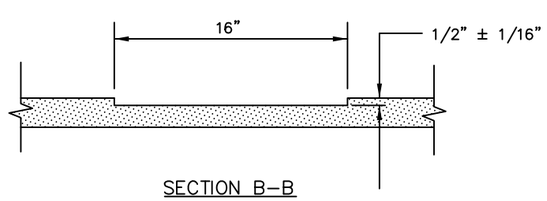


SECTION B–B

TYPICAL SHOULDER INSTALLATION DETAIL

## SHOULDER RUMBLE STRIP NOTES:

1. PERFORM ALL STAKING AS NECESSARY TO INSTALL RUMBLE STRIPS IN ACCORDANCE WITH THE PLANS, THESE DETAILS, AND THE FOLLOWING NOTES:
2. DO NOT INSTALL RUMBLE STRIPS IN THE FOLLOWING INSTANCES:
   - A. BRIDGE DECKS
   - B. BRIDGE APPROACH SLABS
   - C. PAVEMENT LESS THAN 2 INCHES THICK
   - D. PAVEMENT THAT HAS ALLIGATORING, FATIGUE, CRACKING, OR IN POOR CONDITION
   - E. PAVEMENT JOINTS
   - F. INTO LANE EDGE LINE STRIPING
3. USE CENTERLINE OR LANE LINE DIVIDING LINES, RATHER THAN LANE EDGE LINES, FOR RUMBLE STRIP ALIGNMENT CONTROL WHENEVER POSSIBLE.
4. WHERE BICYCLES ARE ALLOWED ON THE FACILITY, SHOULDER RUMBLE STRIP GAPS (68' RUMBLE STRIP, 12' GAP CENTER TO CENTER, 11'-5" GAP, EDGE TO EDGE) SHOULD BE CONTINUOUS.
5. ON DIVIDED HIGHWAYS, PROVIDE CONTINUOUS RUMBLE STRIP ON THE INSIDE (LEFT) SHOULDER.
6. MINIMUM REQUIRED CLEAR WIDTHS AFTER INSTALLATION ARE AS FOLLOWS:
   - A. AT LEAST 4' WHERE NO GUARDRAIL IS PRESENT (6.0' INITIAL SHOULDER WIDTH).
   - B. AT LEAST 5' (TO FACE OF GUARDRAIL) WHERE GUARDRAIL IS PRESENT (≥ 7.0' AT INITIAL SHOULDER WIDTH).
   - C. NO MINIMUM WHERE BICYCLES ARE PROHIBITED.

Note: Drawing not to scale

State of Alaska DOT&PF
ALASKA STANDARD PLAN

**MILLED RUMBLE STRIPS SHOULDER DETAILS**

Adopted as an Alaska Standard Plan by: Carolyn Morehouse
Carolyn Morehouse, P.E.
Chief Engineer

Adoption Date: 07/17/2020

Last Code and Stds. Review
By: LRG Date: 07/17/2020

Next Code and Standards Review date: 07/17/2030

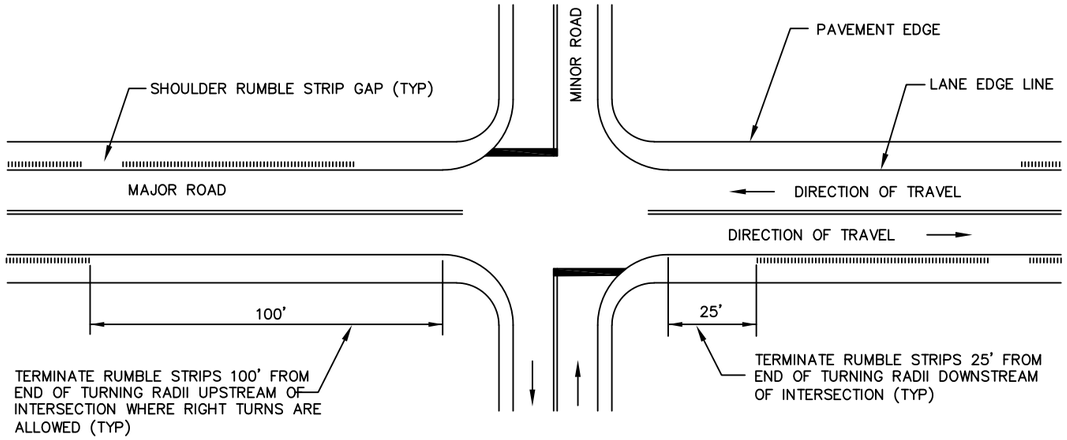


RUMBLE STRIP LAYOUT AT INTERSECTIONS

APPLIES TO ALL SIDE ROAD INTERSECTIONS, PUBLIC TURNOUTS, COMMERCIAL ROAD APPROACHES, AND GANG MAILBOX TURNOUTS (WHERE BICYCLES ARE ALLOWED)

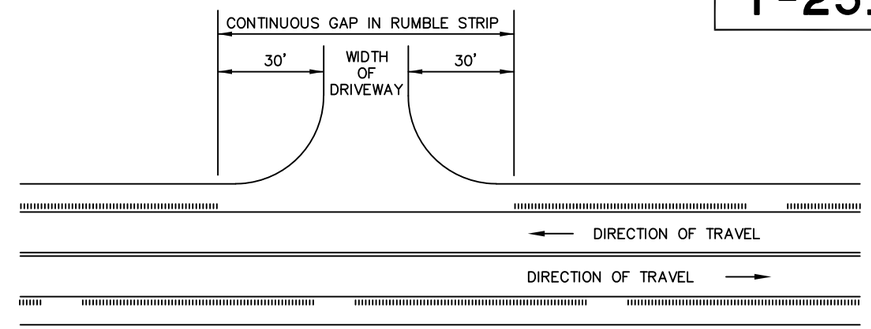


RUMBLE STRIP LAYOUT AT RESIDENTIAL DRIVEWAYS

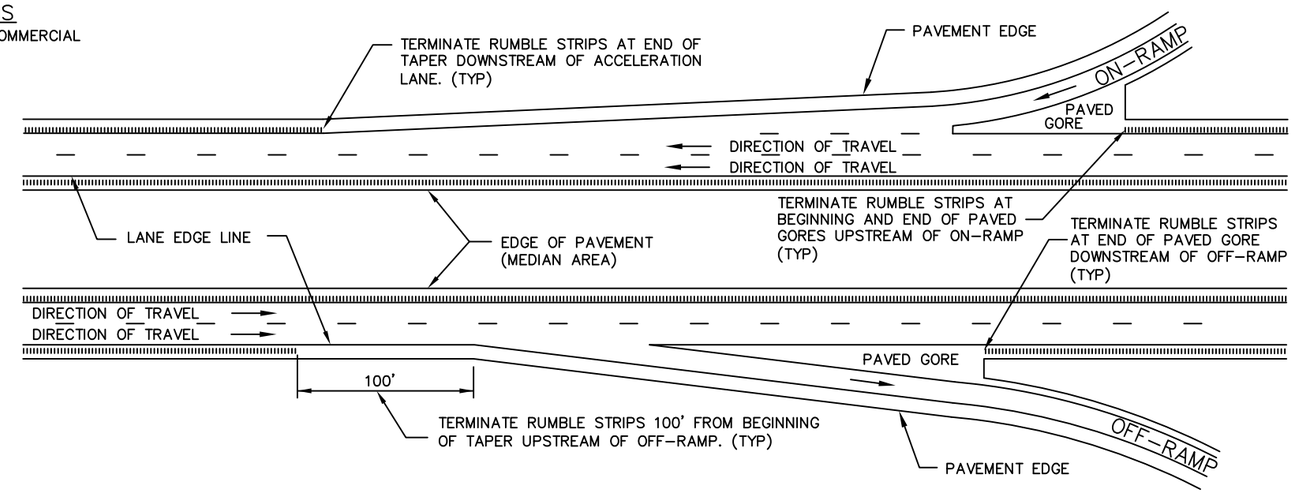


RUMBLE STRIP LAYOUT AT FREEWAY ON- AND OFF-RAMPS

THIS DRAWING APPLIES TO BOTH PARALLEL AND TAPERED LANES (WHERE BICYCLES ARE ALLOWED)

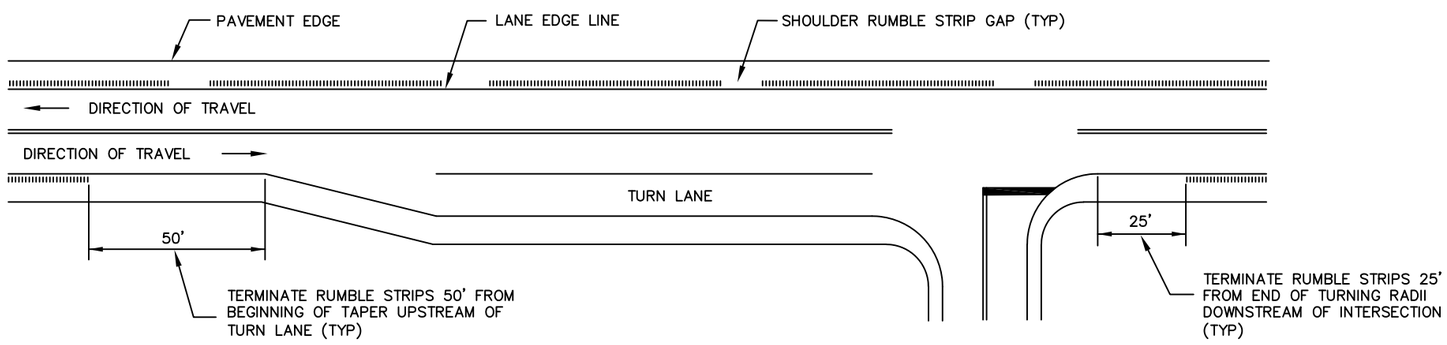


RUMBLE STRIP LAYOUT AT RIGHT TURN LANES

(WHERE BICYCLES ALLOWED)

Note: Drawing not to scale

State of Alaska DOT&PF
ALASKA STANDARD PLAN

**MILLED RUMBLE STRIPS SHOULDER DETAILS**

Adopted as an Alaska Standard Plan by: Carolyn Morehouse
Carolyn Morehouse, P.E.
Chief Engineer

Adoption Date: 07/17/2020

Last Code and Stds. Review
By: LRG Date: 07/17/2020

Next Code and Standards Review date: 07/17/2030

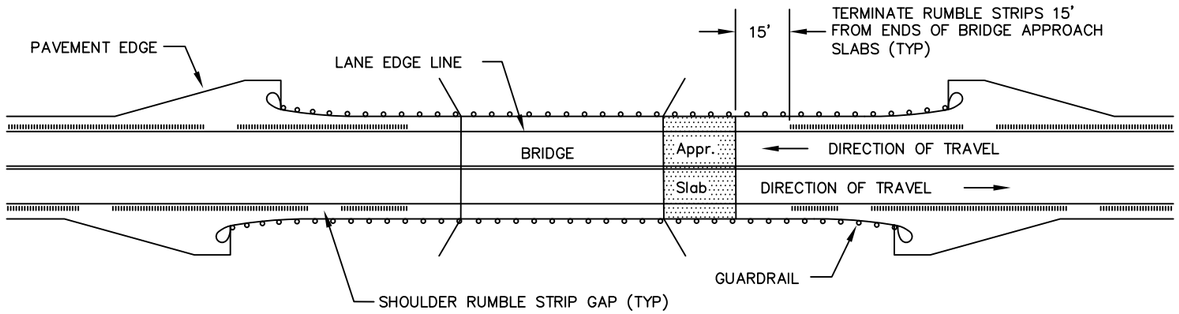


RUMBLE STRIP LAYOUT AT BRIDGES WITH ADEQUATE SHOULDER
(WHERE BICYCLES ARE ALLOWED)

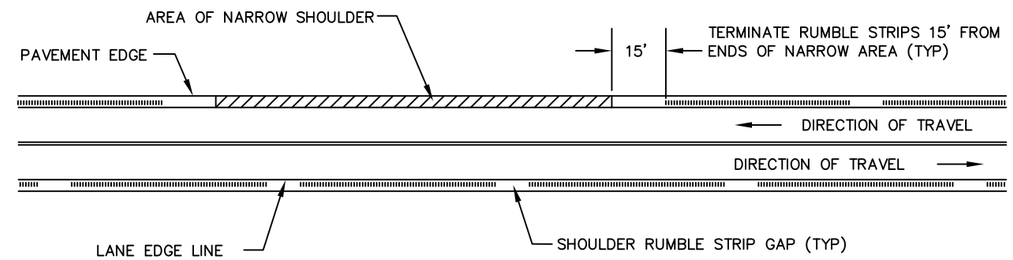


RUMBLE STRIP LAYOUT IN AREAS WITH NARROW SHOULDER
(WHERE BICYCLES ARE ALLOWED)
(SEE NARROW SHOULDER WIDTH NOTE THIS SHEET FOR DEFINITIONS AND TOLERANCES)

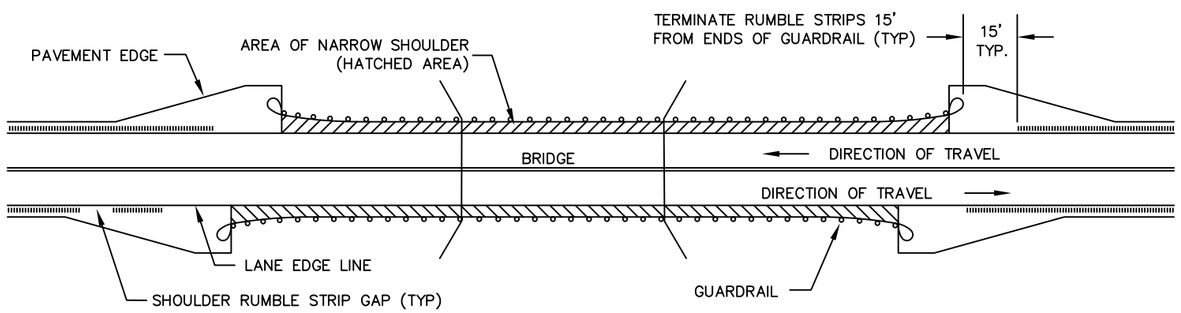


RUMBLE STRIP LAYOUT AT BRIDGES WITH NARROW SHOULDER
(WHERE BICYCLES ARE ALLOWED)
(SEE NARROW SHOULDER WIDTH NOTES THIS SHEET)

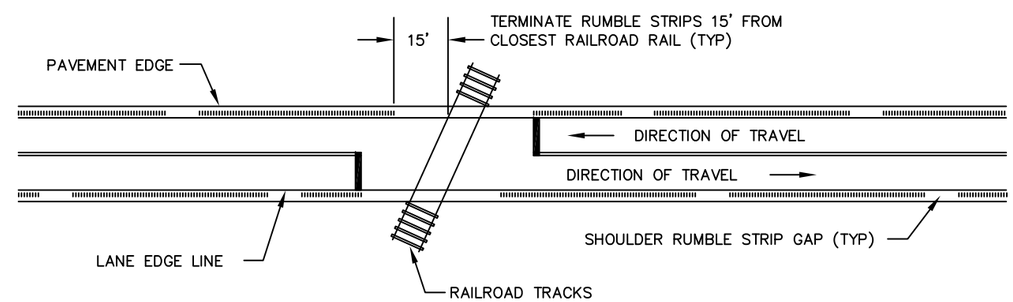


RUMBLE STRIP LAYOUT AT RAILROAD CROSSINGS
(WHERE BICYCLES ARE ALLOWED)

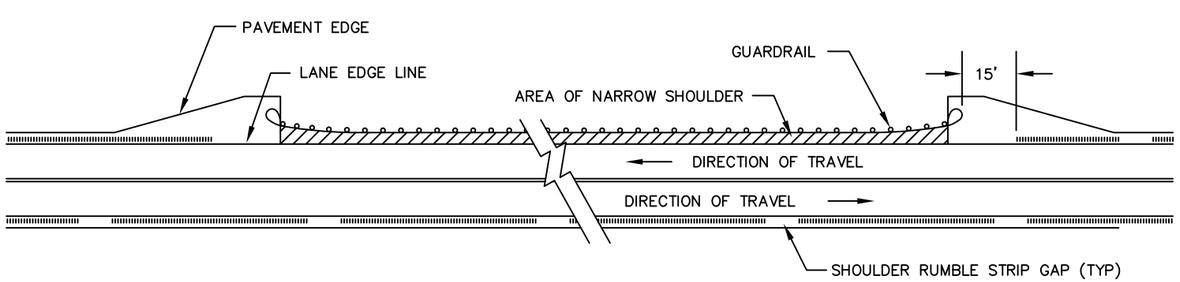


RUMBLE STRIP LAYOUT IN AREAS WITH GUARDRAIL AND NARROW SHOULDER
(WHERE BICYCLES ARE ALLOWED)
(SEE NARROW SHOULDER WIDTH NOTES THIS SHEET)

## NARROW SHOULDER WIDTH NOTES:

A SIX INCH TOLERANCE IS ALLOWED (FOR DISTANCES OF 100 FT. OR LESS) FOR THE FOLLOWING MINIMUM REQUIRED CLEAR WIDTHS:

a. AT LEAST 4' WHERE NO GUARDRAIL IS PRESENT.

b. AT LEAST 5' (TO FACE OF GUARDRAIL) WHERE GUARDRAIL IS PRESENT.

c. NO MINIMUM WHERE BICYCLES ARE PROHIBITED.

Note: Drawing not to scale

State of Alaska DOT&PF
ALASKA STANDARD PLAN

**MILLED RUMBLE STRIPS SHOULDER DETAILS**

Adopted as an Alaska Standard Plan by: Carolyn Morehouse
Carolyn Morehouse, P.E.
Chief Engineer

Adoption Date: 07/17/2020

Last Code and Stds. Review
By: LRG Date: 07/17/2020

Next Code and Standards Review date: 07/17/2030

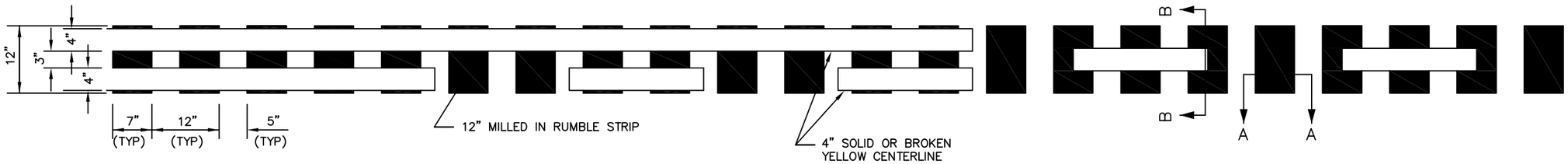


CENTERLINE RUMBLE STRIP PLAN VIEW

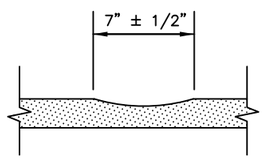


SECTION A–A

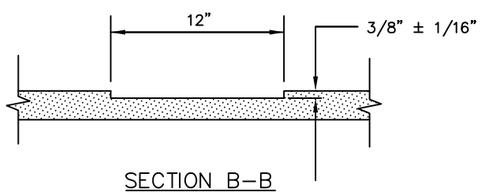


SECTION B–B

## CENTERLINE RUMBLE STRIP NOTES:

1. PERFORM ALL STAKING AS NECESSARY TO INSTALL RUMBLE STRIPS IN ACCORDANCE WITH THE PLANS, THESE DETAILS, AND THE FOLLOWING NOTES.
2. DO NOT INSTALL RUMBLE STRIPS IN THE FOLLOWING INSTANCES:
   A. BRIDGE DECKS
   B. BRIDGE APPROACH SLABS
   C. PAVEMENT LESS THAN 2 INCHES THICK
   D. PAVEMENT THAT HAS ALLIGATORING, FATIGUE, CRACKING, OR IN POOR CONDITION
   E. PAVEMENT JOINTS
   F. INTO LANE EDGE LINE STRIPING
3. WHERE INSTALLED, CENTERLINE RUMBLE STRIPS SHALL BE CONTINUOUS REGARDLESS OF CENTERLINE STRIPING CONFIGURATION. BOTH PASSING AND NO–PASSING PORTIONS OF ROADWAY WITHIN THE LIMITS OF THE CENTERLINE RUMBLE STRIP INSTALLATION SHALL BE MILLED.
4. CENTERLINE RUMBLES MAY BE EXTENDED INTO PAINTED MEDIANS WHERE A DOUBLE YELLOW STRIPE SEPARATES OPPOSING TRAFFIC. WHERE CENTERLINES SPLIT TO CREATE A LEFT TURN LANE ALONG A RURAL HIGHWAY, THE RUMBLES SHOULD BE PLACED ALONG BOTH PORTIONS OF THE CENTERLINE.
5. DO NOT INSTALL CENTERLINE RUMBLE STRIPS IN A TWO–WAY LEFT TURN LANE.
6. DO NOT INSTALL CENTERLINE RUMBLES WHEN THE COMBINED LANE AND SHOULDER WIDTH IN EACH DIRECTION IS LESS THAN 14'.
7. BREAK CENTERLINE RUMBLES FOR ALL SIDE STREET AND COMMERCIAL ROAD INTERSECTIONS WHERE THERE ARE LEFT TURN LANES.
8. CENTERLINE STRIPING SHALL BE RE–ESTABLISHED FOLLOWING MILLING OPERATIONS IN ACCORDANCE WITH SECTION 670, "TRAFFIC MARKINGS". 60 MIL SURFACE APPLIED METHYL METHACRYLATE PAVEMENT MARKINGS SHALL BE INSTALLED ON ALL AREAS FOLLOWING CENTERLINE RUMBLE STRIP INSTALLATION WHERE CENTERLINE RUMBLE STRIPS ARE APPLIED.

Note: Drawing not to scale

State of Alaska DOT&PF
ALASKA STANDARD PLAN

**MILLED RUMBLE STRIPS CENTERLINE DETAILS**

Adopted as an Alaska Standard Plan by: Carolyn Morehouse
Carolyn Morehouse, P.E.
Chief Engineer

Adoption Date: 07/17/2020

Last Code and Stds. Review
By: LRG Date: 07/17/2020

Next Code and Standards Review date: 07/17/2030

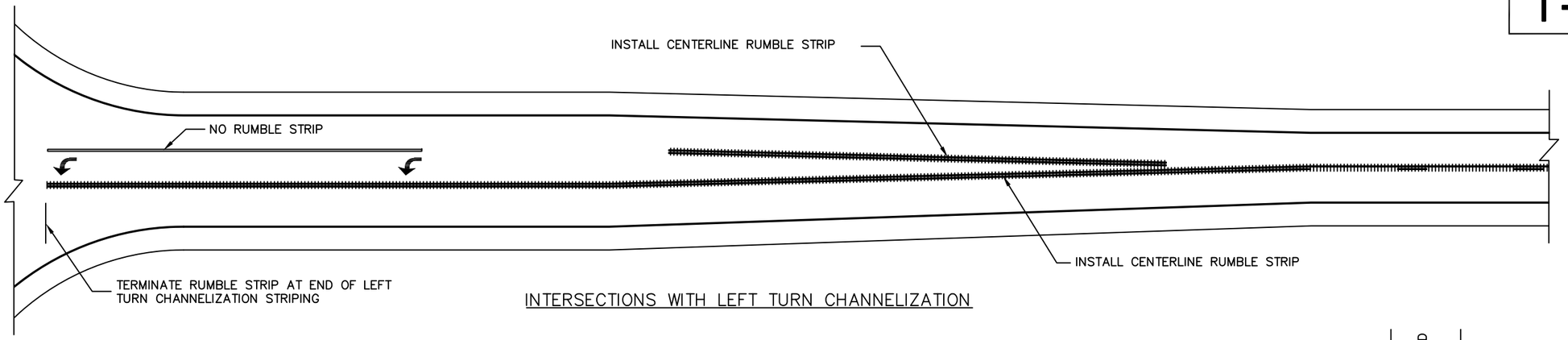


INTERSECTIONS WITH LEFT TURN CHANNELIZATION

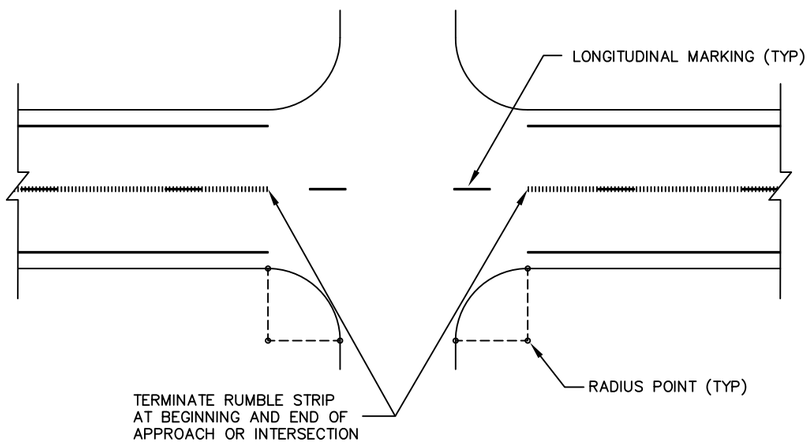


HIGHER VOLUME INTERSECTONS AND COMMERCIAL APPROACHES

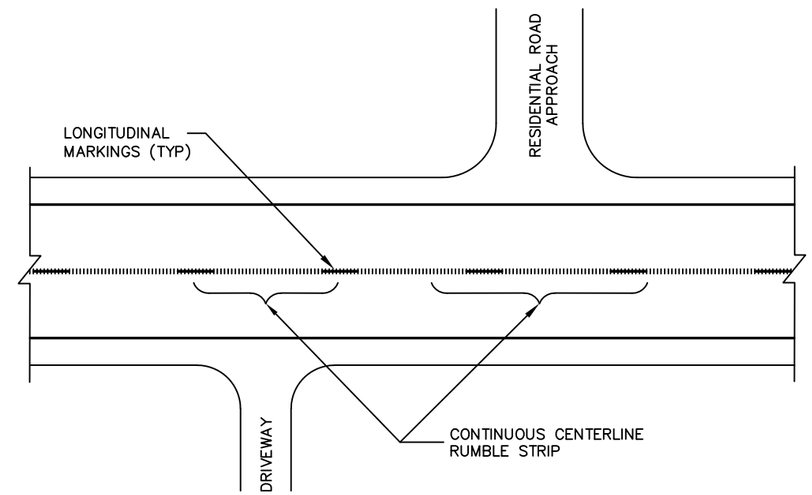


NON-COMMERCIAL ROAD AND DRIVEWAY APPROACHES

(DO NOT BREAK FOR THESE ACCESS POINTS)

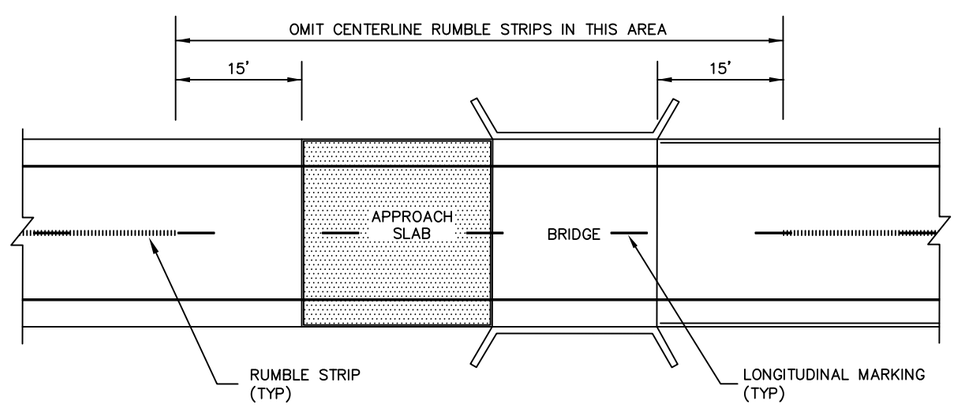


BRIDGE

Note: Drawing not to scale

State of Alaska DOT&PF
ALASKA STANDARD PLAN

**MILLED RUMBLE STRIPS CENTERLINE DETAILS**

Adopted as an Alaska Standard Plan by: Carolyn Morehouse
Carolyn Morehouse, P.E.
Chief Engineer

Adoption Date: 07/17/2020

Last Code and Stds. Review
By: LRG Date: 07/17/2020

Next Code and Standards Review date: 07/17/2030

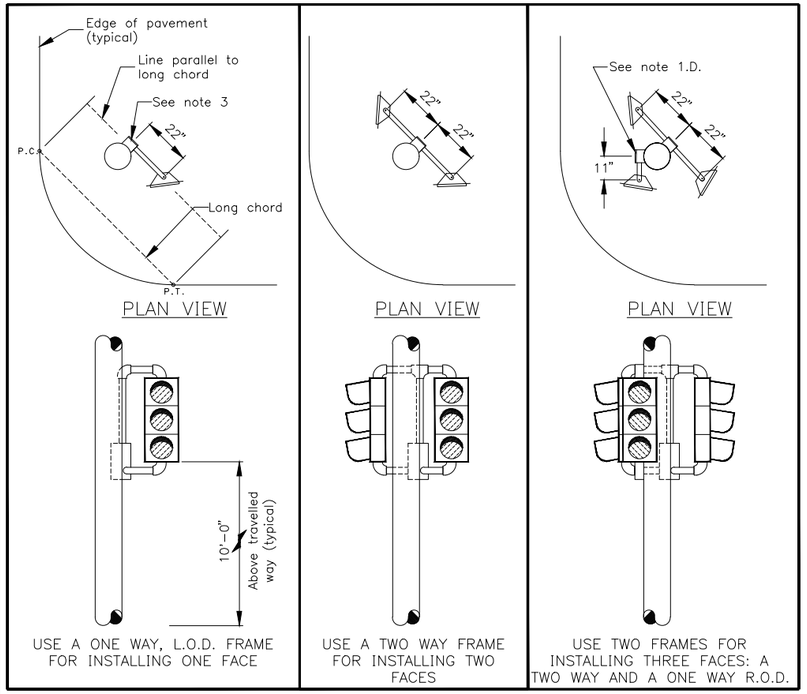


SIDE MOUNTED SIGNAL FRAMES WITH VEHICULAR SIGNALS
(SHOWN WITHOUT BACKPLATES)

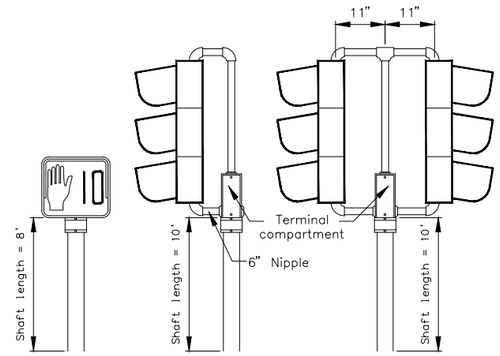


POST MOUNTED SIGNALS
(SHOWN WITHOUT BACKPLATE)

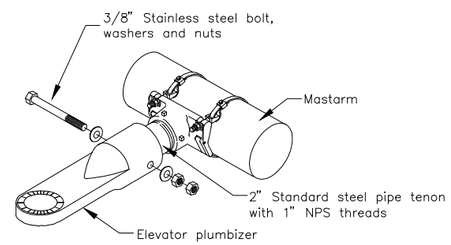


ELEVATOR PLUMBIZER
(SEE NOTE 1.A.)

## NOTES:

1. Install the signal faces shown in the plans as detailed on this sheet and per Alaska Traffic Manual.
   A. Use elevator plumbizers to install faces on mastarms and whenever two inch pipe tenons are specified. Install the plumbizer between the red and yellow signal (between green and yellow for Northern Region) indications for a three section head and between the two yellow signal indications for a four section head. Use stainless steel band mount hardware, AB-3007-L as manufactured by PELCO PRODUCTS, INC., or approved equal to install plumbizer to mastarms. PELCO mount shall have stainless steel option.
   B. Use slip fitters to install pedestrian signals on the top of posts.
   C. Use signal frames to install signal faces on the sides of poles and on the tops of posts.
   D. Use a second signal frame to install the third face when three side mounted signal faces are shown.
   E. Use clamshell brackets to install all pedestrian signals, except those that are post top mounted.
2. Furnish all signal frames with terminal compartments.
3. Install one terminal compartment on the side of the pole opposite the midpoint of the radius return. Position the terminal compartment at the location where a line parallel to the long chord (P.C. to P.T.) of the radius return is tangent to the pole.
4. Install pedestrian indication to face the center of the far side crosswalk. Acceptable variance is +/- 1 degree.
5. Field drill the holes needed for attaching all signal hardware. Use hole saws when drill bits are not available. Treat the bare steel surfaces in accordance with Section 660-3.01.8, repairing damaged finishes, of the Standard Specifications.
6. Provide solid backplates (louvered in Southcoast Region) sized for the number of signal sections and mounting type, so that no light is visible between the backplate and the signal face. Furnish backplates for doghouse style signals that feature notched upper corners.
7. Attach all back plates using plated steel rivets with large flange button heads. Install 0.187" diameter by 0.575" long rivets that provide at least 530 lbs. and 670 lbs. shear and tensile strengths, respectively. Bore out the mounting holes in the back plates and signal heads to the diameter recommended by the rivet manufacturer.
8. Before installing the machine screws that secure the visors, coat the threads with an anti-seizing compound.

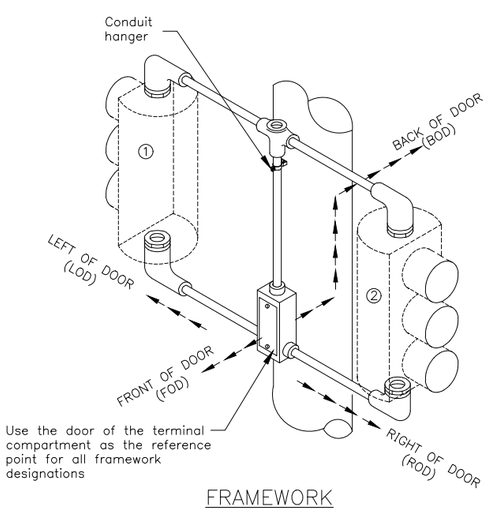


FRAMEWORK DESCRIPTION
HEAD NO. ① OFFSET L.O.D.
HEAD NO. ② OFFSET R.O.D.

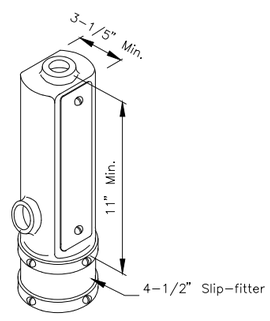


TERMINAL COMPARTMENT WITH SLIP FITTER
(SEE NOTES 1.C. AND 2)

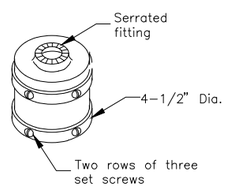


SLIP FITTER
(SEE NOTE 1.B.)

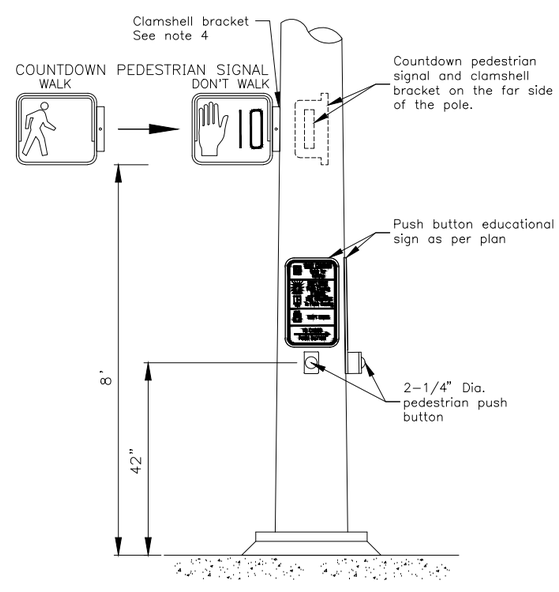


PEDESTRIAN HARDWARE

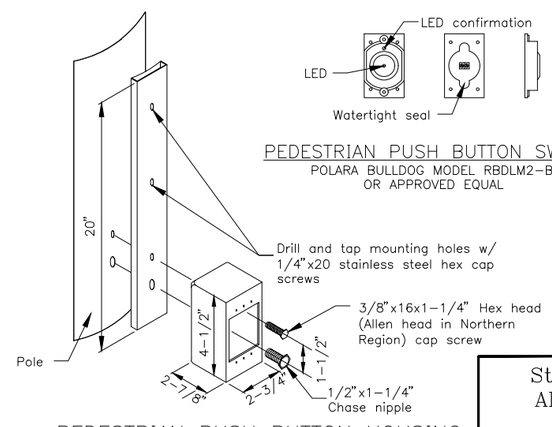


PEDESTRIAN PUSH BUTTON HOUSING
(STYLE A)

State of Alaska DOT&PF
ALASKA STANDARD PLAN

**TRAFFIC SIGNAL HARDWARE**

Adopted as an Alaska Standard Plan by: Carolyn Morehouse
Carolyn Morehouse, P.E.
Chief Engineer

Adoption Date: 7/17/2020

Last Code and Stds. Review
By: KLK Date: 7/8/2020

Next Code and Standards Review Date: 7/8/2030

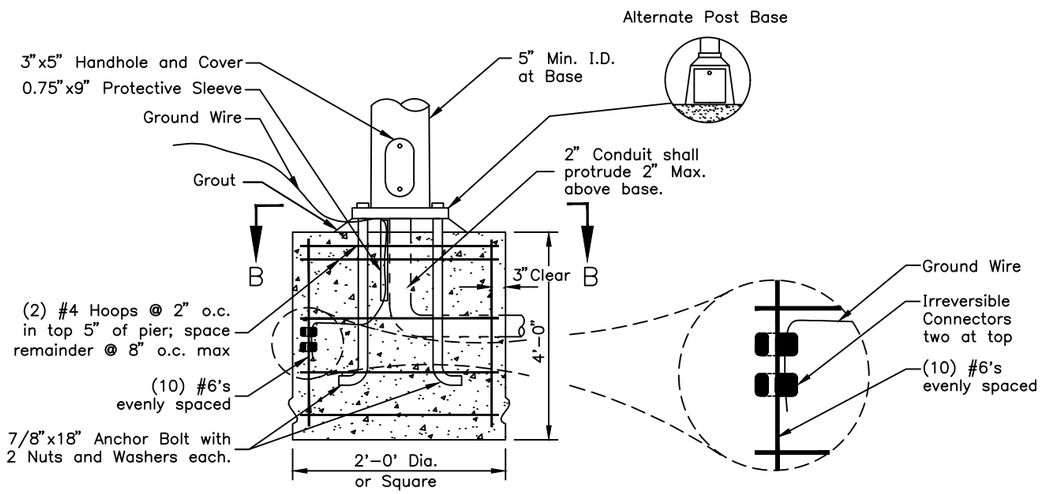


SIGNAL BASE POST TYPE "A"

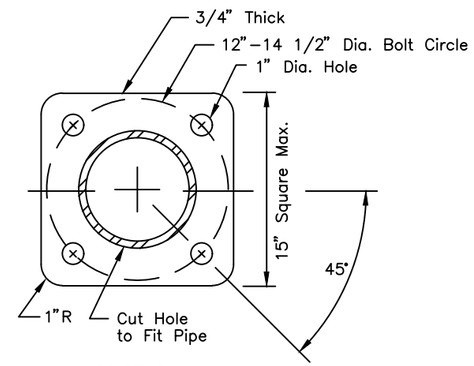


SECTION B-B

## GENERAL NOTES:

1. Install ground rod when continuous electrically secure system is not provided between controller and service ground.
2. Anchor bolts, nuts and washers shall be high strength steel and shall conform to A.S.T.M. A-325. Galvanizing of same shall conform to A.S.T.M. A-153.
3. Anchor bolts may be field cut and bent.
4. Damage to galvanized surfaces as a result of field drilling and or cutting shall be repaired in accordance with Federal Specifications TT-P-641.
5. Use Class A, B, or W concrete.
6. Reinforcing steel to conform to A.S.T.M. A-615 grade 60 (Fy=60 ksi).

State of Alaska DOT&PF
ALASKA STANDARD PLAN

TRAFFIC SIGNAL & ACCESSORIES FOUNDATION

Adopted as an Alaska Standard Plan by: Carolyn Morehouse
Carolyn Morehouse, P.E.
Chief Engineer

Adoption Date: 7/17/2020

Last Code and Stds. Review
By: KLK,MJM Date: 7/8/2020

Next Code and Standards Review Date: 7/8/2030

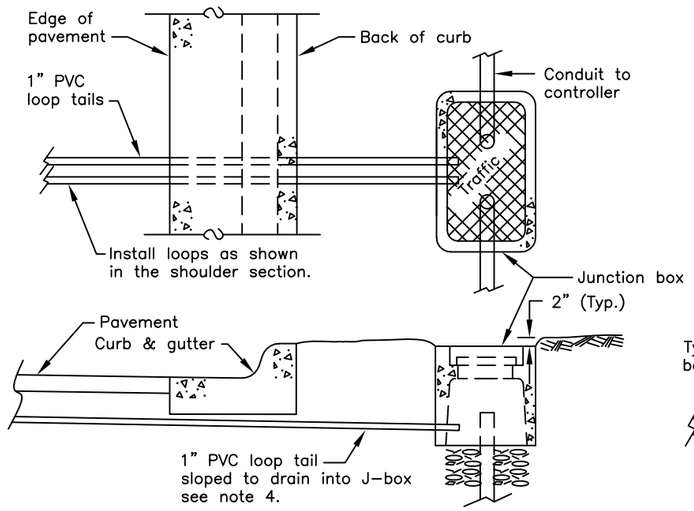


CURB SECTION

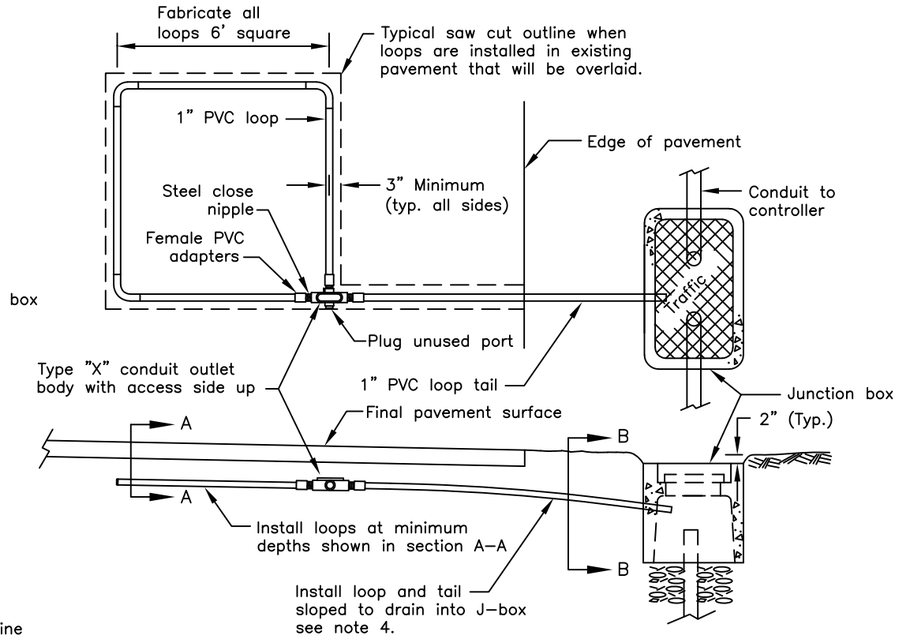


SHOULDER SECTION

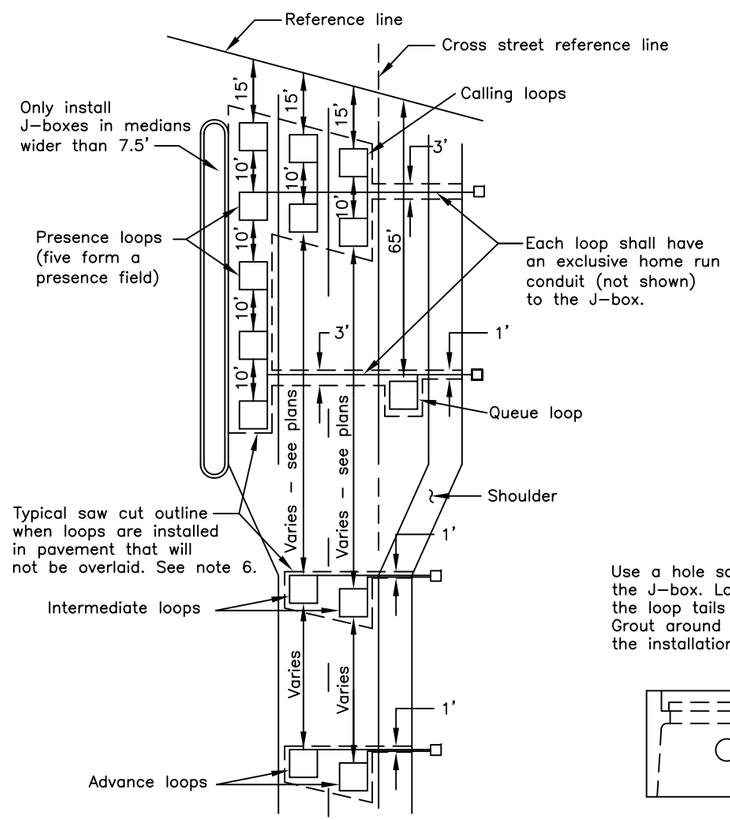


TYPICAL LOOP SETBACKS

Measure the setbacks from the reference line along the center of each lane.

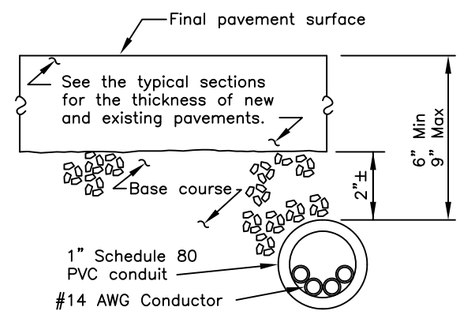


SECTION A-A

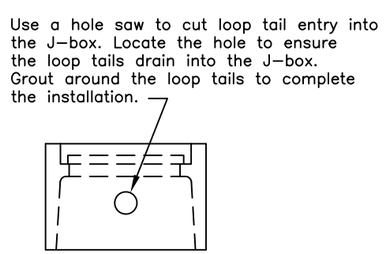


VIEW B-B

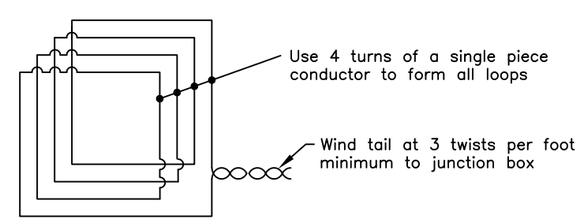


LOOP WIRING DETAIL

TYPICAL PVC CONDUIT ENCASED LOOP DETECTOR INSTALLATION

## GENERAL NOTES

1. Solvent weld all PVC to PVC joints. Use hot dip galvanized steel type X outlet bodies to join the loops and tails.
2. Use tube loop wire per IMSA specification 51-5 with the optional polyethylene tubing.
3. Install and test all loop detectors before overlaying the existing pavement or paving the new roadway.
4. Drill five 1/4" weep holes on 12" centers in the underside of the conduit at the low spot when the loop and tail cannot be installed to drain into the J-box. If the Engineer allows 90 degree elbows to be used, drill a 1/4" hole in the low point.
5. When installing loop detectors in existing pavement, cut the asphalt with a saw and remove all asphalt within the saw cut.
6. Where existing pavement will not be overlaid, cut the pavement with a saw as follows:
   A. Remove all pavement from the length of the five loop presence fields.
   B. Enclose all loops that enter a common junction box within one saw cut area.
   C. Cut to within 12" of lane and edge lines to preserve them.
   D. Remove asphalt to gutter where there are no edge lines.
   E. Cut across lane lines when loops are side by side.
   F. Cut trenches crossing a lane a minimum of 3' wide.
   G. Cut trenches crossing a shoulder a minimum 12" wide.
7. Heat and tack coat the edges of existing pavement before paving cutouts. Compact the asphalt mixture with a self-propelled steel wheeled roller. Furnish asphalt mix that conforms to section 401 of the Specifications, and is approved by the Engineer. Maintain the replacement asphalt temperature at the mixing temperature specified in the approved mix design until compaction has begun.
8. To establish the reference lines, extend the right edges of the outermost through lanes across the intersection.

State of Alaska DOT&PF
ALASKA STANDARD PLAN

**LOOP DECTECTOR INSTALLATION**

Adopted as an Alaska Standard Plan by: Kenneth J. Fisher, P.E. Chief Engineer

Adoption Date: 02/08/2019

Last Code and Stds. Review
By: Date:

Next Code and Standards Review date:02/08/2029

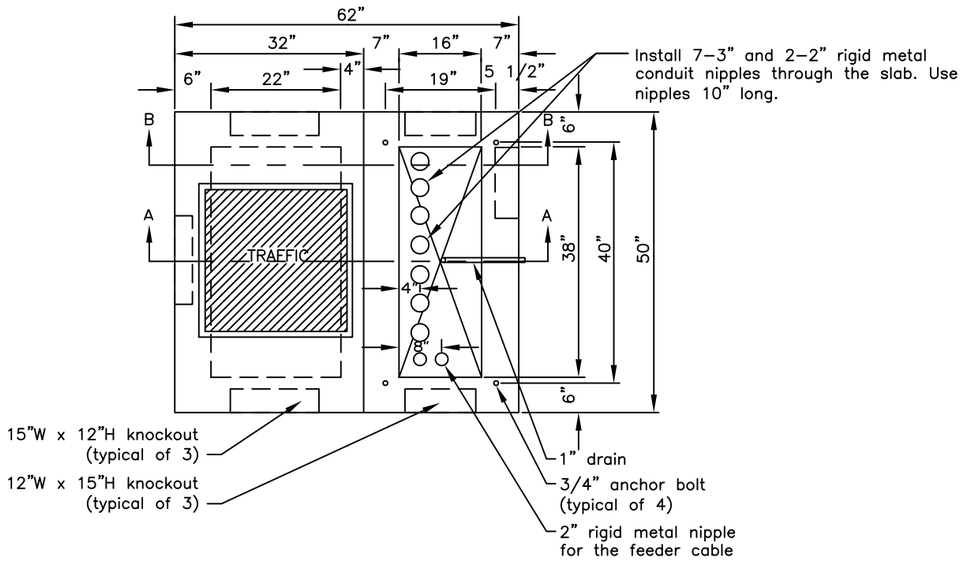


TYPE "P" or "R" CONTROLLER CABINET FOUNDATION

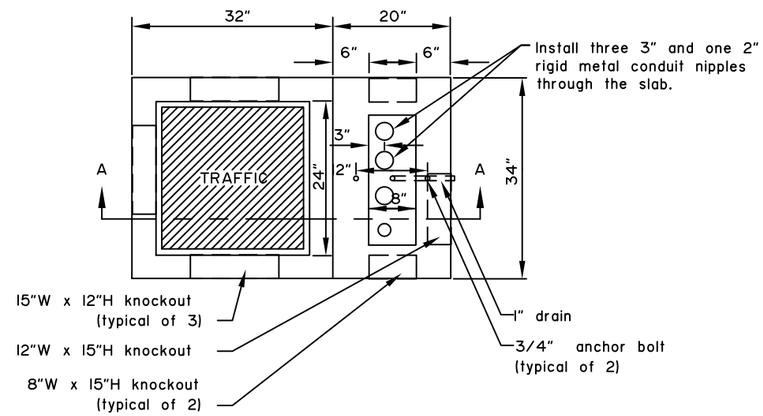


TYPE "M" CONTROLLER CABINET FOUNDATION

## GENERAL NOTES

1. Install anchor bolts so they do not protrude more than 1 1/2" above the top of the foundation. Anchor bolt dimensions shall be as specified by the cabinet manufacturer.
2. Provide all conduit ends with grounding bushings. Seal unused conduit stubs with watertight caps. Provide a one pound package of duct seal compound to be installed in conductor carrying conduit stubs by signal technicians during final inspection.
3. Route the #6 copper grounding jumper from the ground rod through the 2" pipe nipple and attach it to the grounding bushing on the feeder cable conduit.
4. Bond the braided copper grounding conductor to the #6 copper grounding jumper using an irreversible compression connector. Provide sufficient slack such that there will be a minimum of 3' conductor to extend past the lid opening.
5. Stop horizontal and vertical steel at the block-out panels and the joint using 90° hooks. Place 2 extra #5 horizontal and vertical bars all sides as shown.

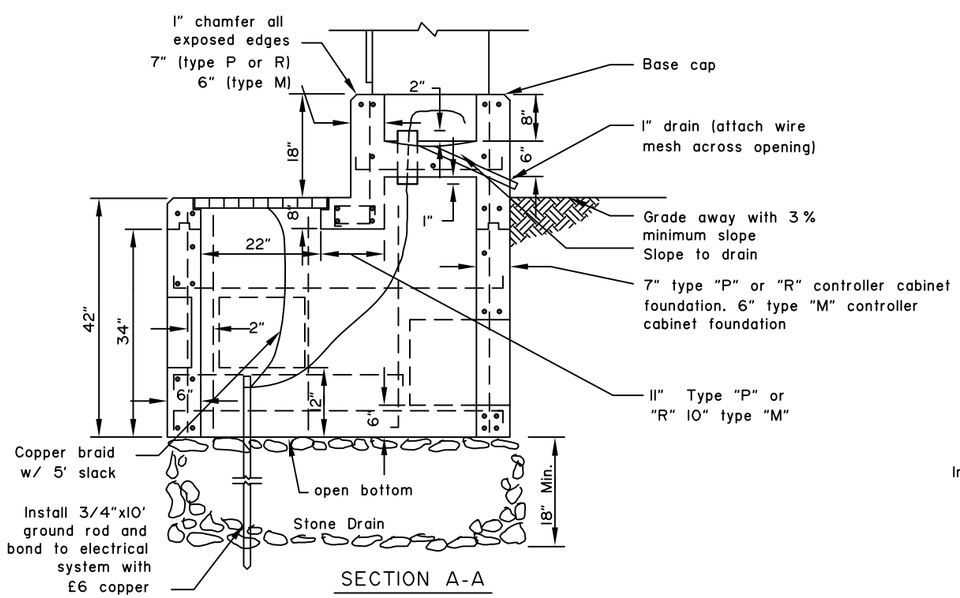


SECTION A-A

NOTE: see section "B-B" for rebar details.

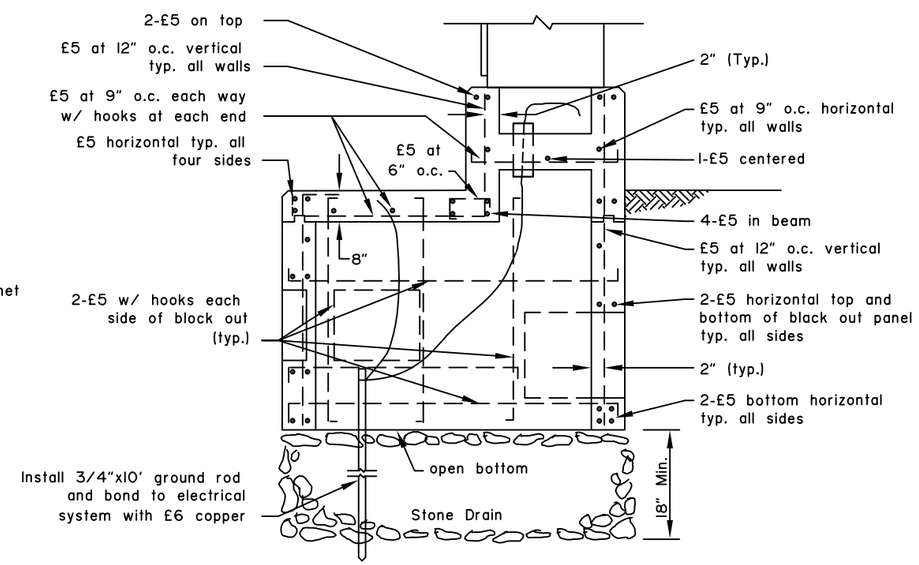


SECTION B-B

NOTES: see section "A-A" for dimensional details & notes.

State of Alaska DOT&PF
ALASKA STANDARD PLAN

**CONTROLLER CABINET FOUNDATION**

Adopted as an Alaska Standard Plan by: Kenneth J. Fisher, P.E.
Chief Engineer

Adoption Date: 02/08/2019

Last Code and Stds. Review
By: Date:

Next Code and Standards Review date: 02/08/2029

# T-40.00

SHEET | of |

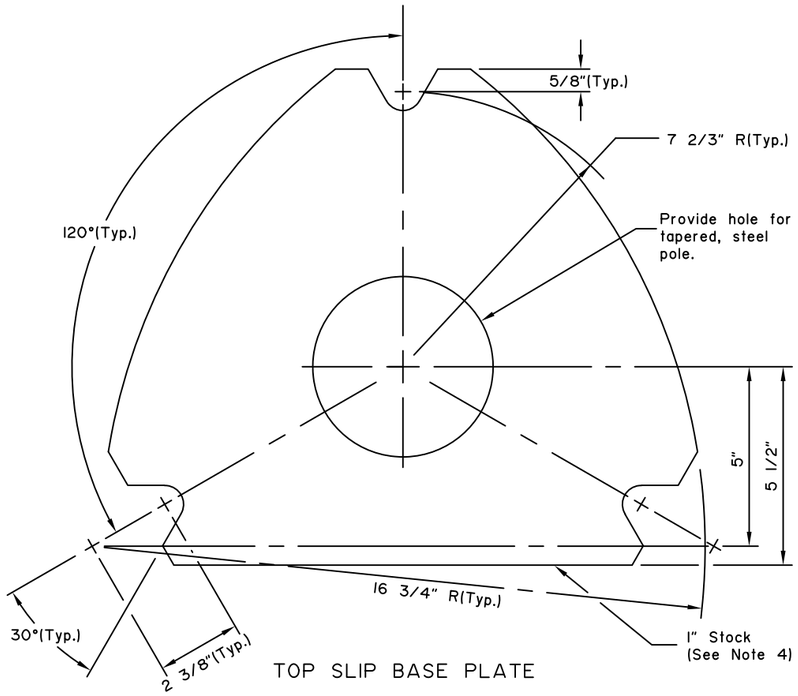


TOP SLIP BASE PLATE

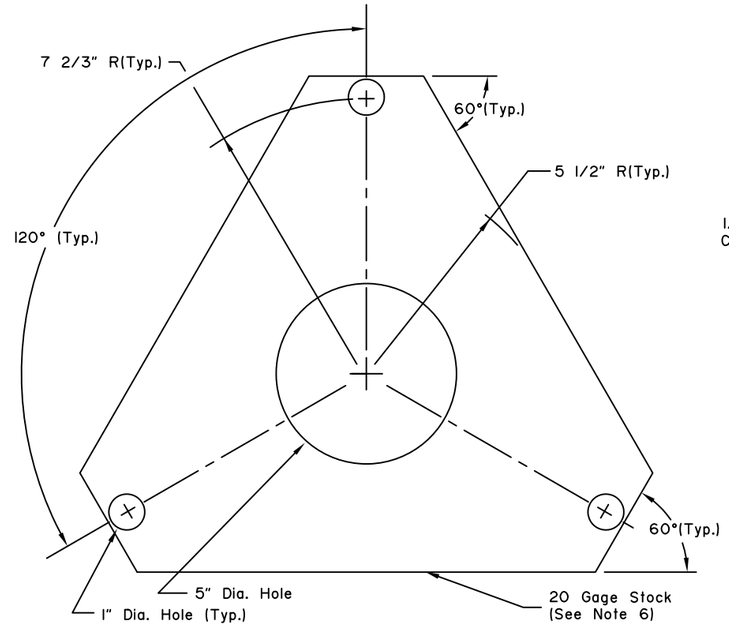


KEEPER PLATE

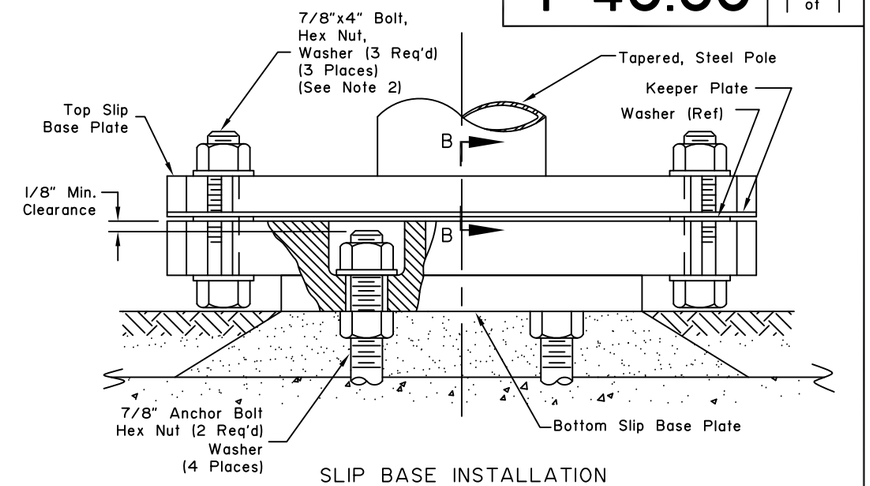


SLIP BASE INSTALLATION

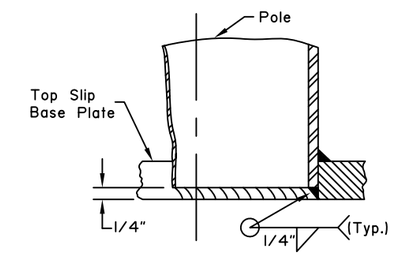


VIEW B-B

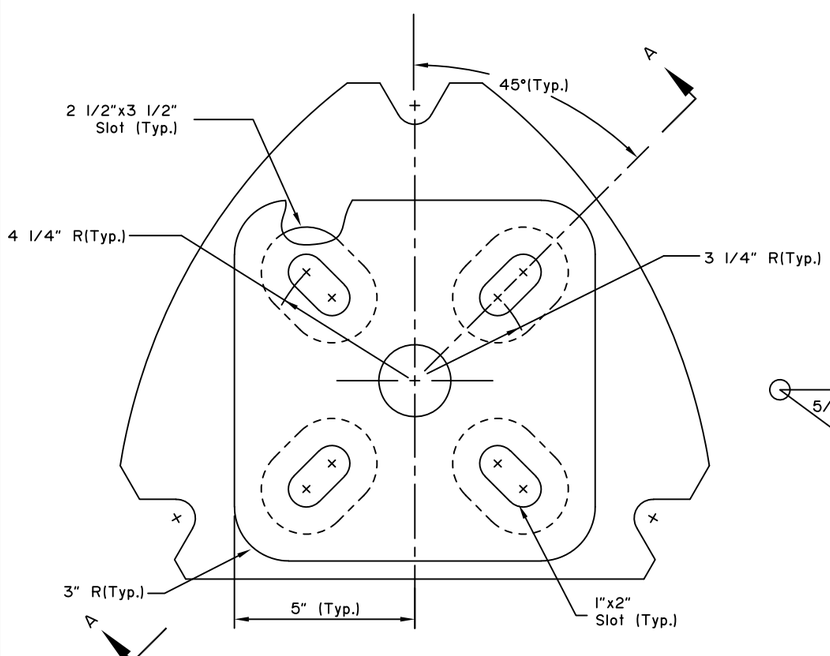


BOTTOM SLIP BASE PLATE

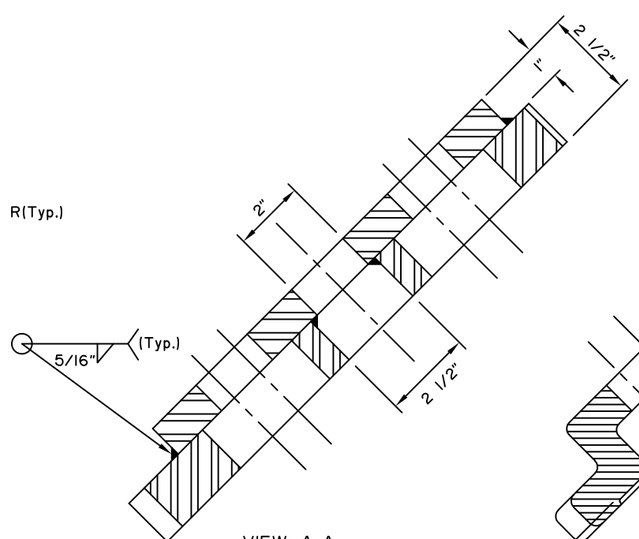


VIEW A-A
Welded Option
(See Note 4)

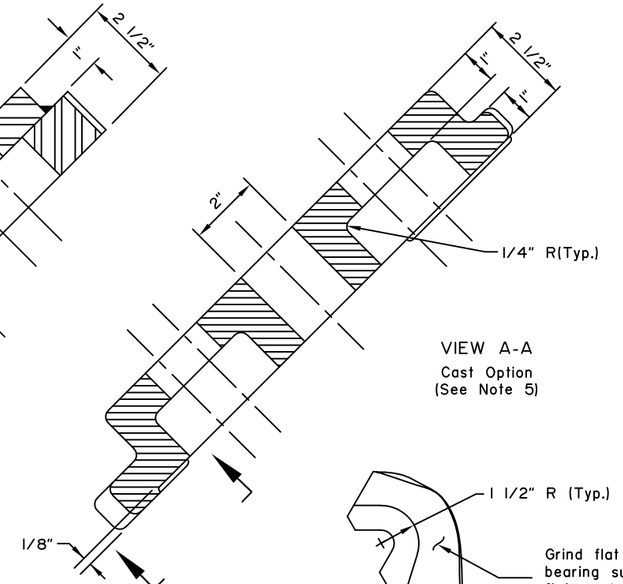


VIEW A-A
Cast Option
(See Note 5)

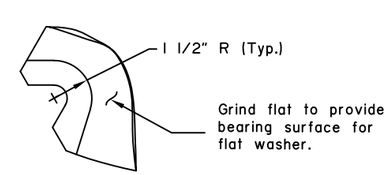


## GENERAL NOTES:

1. All new material to be galvanized after fabrication.
2. Torque 7/8" H.S. Slip Base Plate bolts to 800 inch lbs.
3. All slots to be filled with mastic.
4. Plates shall conform to ASTM A36.
5. Cast option shall conform to ASTM A486, Class 90.
6. Keeper Plate shall conformt to ASTM A446, Grade A.
7. All welds shall conform to American Welding Society Specifications.

State of Alaska DOT&PF
ALASKA STANDARD PLAN

**SLIP BASE FOR POST MOUNTED TRAFFIC SIGNALS**

Adopted as an Alaska Standard Plan by: Kenneth J. Fisher, P.E.
Chief Engineer

Adoption Date: 02/08/2019

Last Code and Stds. Review
By: Date:

Next Code and Standards Review date: 02/08/2029

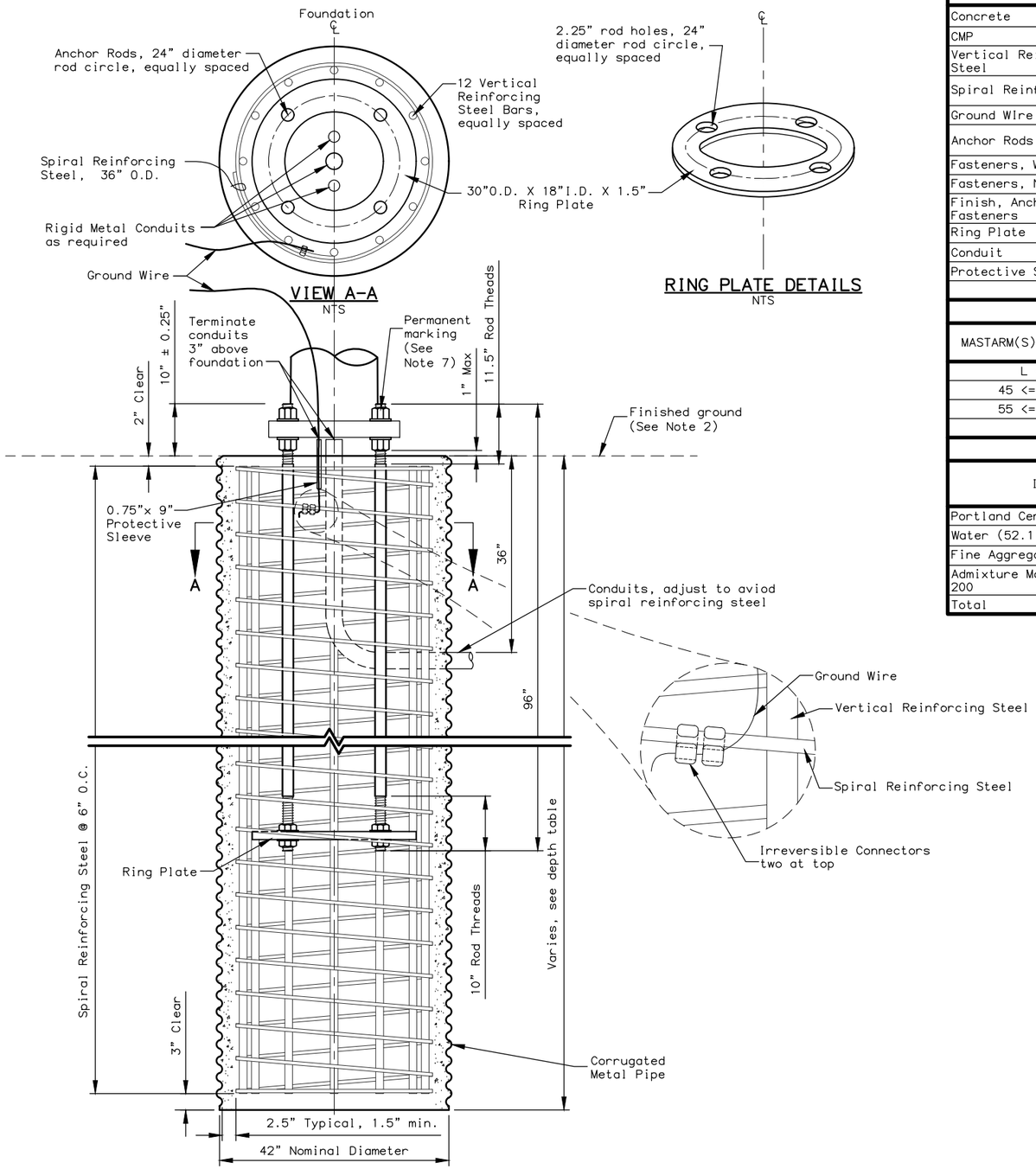


**FOUNDATION DETAILS**
NTS
(Skirt omitted for clarity)

## MATERIAL REQUIREMENTS

| | | |
|---|---|---|
| Concrete | Class A | f'c = 4000 psi |
| CMP | AASHTO M218 | 14 ga. |
| Vertical Reinforcing Steel | AASHTO M31 #11 | GR 60 |
| Spiral Reinforcing Steel | AASHTO M31 #5 | GR 60 |
| Ground WIre | | #4 AWG |
| Anchor Rods 2" X 96" | ASTM F1554 S2, S3, & S5 | GR 105 |
| Fasteners, Washers | ASTM F436 | |
| Fasteners, Nuts | AASHTO M292M | |
| Finish, Anchor Rods & Fasteners | AASHTO M232 | |
| Ring Plate | AASHTO M270 | GR 36 |
| Conduit | Sch 40 | RMC |
| Protective Sleeve | Sch 40 | PVC |

## DEPTH TABLE

| MASTARM(S) LENGTH (ft.) | FOUNDATION DEPTH BY APPLICATION (ft.) | |
|---|---|---|
| | SINGLE MASTARM | DOUBLE MASTARM |
| L <= 40 | 10 | 13 |
| 45 <= L <= 60 | 11 | 14 |
| 55 <= L <= 65 | 12 | 15 |

## SAND SLURRY MIX DESIGN

| ITEM | BATCHING QUANTITIES PER CY BATCH (lbs.) | APPLICABLE SPECS. |
|---|---|---|
| Portland Cement | 188 | 701-2.01 |
| Water (52.1 gal.) | 435 | 712-2.01 |
| Fine Aggregate SSD | 3041 | 703-2.01 |
| Admixture MasterAir AE 200 | 2.0 oz. | 711-2.02 |
| Total | 3664 | |

## DESIGN NOTES:

Design Standard: 2013 Standard Specifications for Structural Supports for Highway Signs, Luminaires and Traffic Signals with 2013 Errata and 2015 Interim Revision.

Design Load: 6,500 lbs axial, 6,500 lbs shear, 175,000 ft-lbs moment.

Specifications: Latest edition of the State Of Alaska Standard Specifications for Highway Construction with Special Provisions.

## NOTES:

1. This foundation is approved for traffic signal applications in cohesionless soils with an N1-60 value of 10 or greater per AASHTO T-206, "Standard Penetration Test" (SPT). This foundation shall not be used if any of the following are encountered; water table above the bottom of foundation, very loose soils, organic soils, cohesive soils (clay), or soils susceptible to frost jacking. If any of these conditions are encountered, stop foundation work and contact the Engineer.
2. Place foundation in drilled or excavated hole with centerline of foundation located at the station, offset, and elevation specified in plans. Set foundation flush with surrounding surface. Grade to drain away from foundation without exposing more than 4" of the foundation from the surrounding ground surface.
3. Form the foundation in corrugated metal pipe conforming to Subsection 707-2.01 of the Specifications.
4. Provide 1.5 extra turns at each end of the spiral reinforcing steel. Reinforcing steel shall not be spliced. Tie vertical reinforcing steel to each intersection of the spiral reinforcing steel.
5. Connect ground wire near the top spiral reinforcing steel with two irreversible connectors as shown. Fasten connectors according to the manufacturers' recommendations including the use of manufacturer specified tools. The ground wire may be bare solid, stranded, or braided copper. Protect ground wire with protective sleeve as shown and fill with silicon sealant.
6. The Ring Plate May be "built up" of multiple steel plates. The minimum thickness for any one plate is 0.5 inches. Fasten the ring plate to anchor rods with nuts and washers on both sides of ring plate as shown. Torque ring plate nuts to 600 ft-lbs.
7. Anchor rods are subject to Charpy V-Notch Impact Testing. Submit mill certifications for anchor rods, nuts and washers. Galvanize anchor rods full length. Provide permanent manufacturer's identification and permanent grade identification on each end of anchor rod by steel die stamp. Secure exposed anchor rods with a "ring plate" when not in service. Install anchor rods plumb. Anchor rods greater than 1:40 out-of-plumb will result in foundation rejection.
8. Complete all concrete work in conformance with Sections 501, 503, and 660 of the Specifications. Use a tremie, tube or other approved device per Subsection 501-3.05. Vibrate concrete during placement by mechanical vibration per Subsection 501-3.06. Ensure upper anchor rod threads are protected from contact with concrete during pour.
9. Backfill and compact according to Section 204, and Subsections 203-3.04 and 660-3.01 of the Specifications. Use select material, Type A or sand slurry as backfill material. Ensure area below foundation meets compaction requirements and is free of loose material and debris prior to concrete work.

State of Alaska DOT&PF
ALASKA STANDARD PLAN

# CONCRETE 42" DIAMETER SIGNAL POLE FOUNDATION

Adopted as an Alaska Standard Plan by: Carolyn Morehouse
Carolyn Morehouse, P.E.
Chief Engineer

Adoption Date: 07/17/2020

Last Code and Stds. Review
By: Date:

Next Code and Standards Review date: 07/17/2030

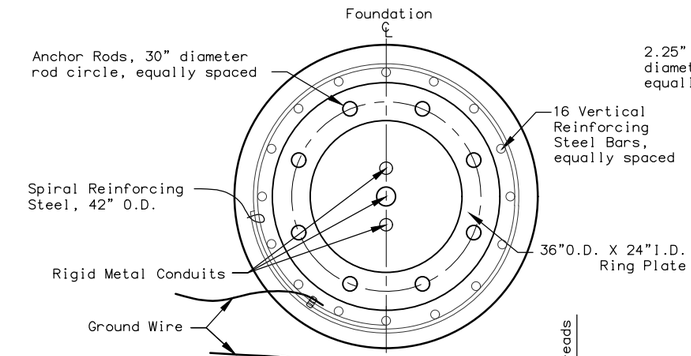


VIEW A-A
NTS

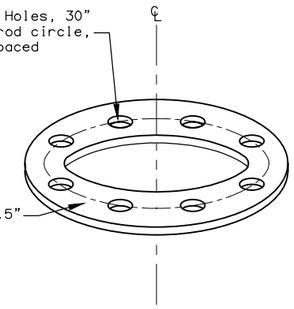


RING PLATE DETAILS
NTS

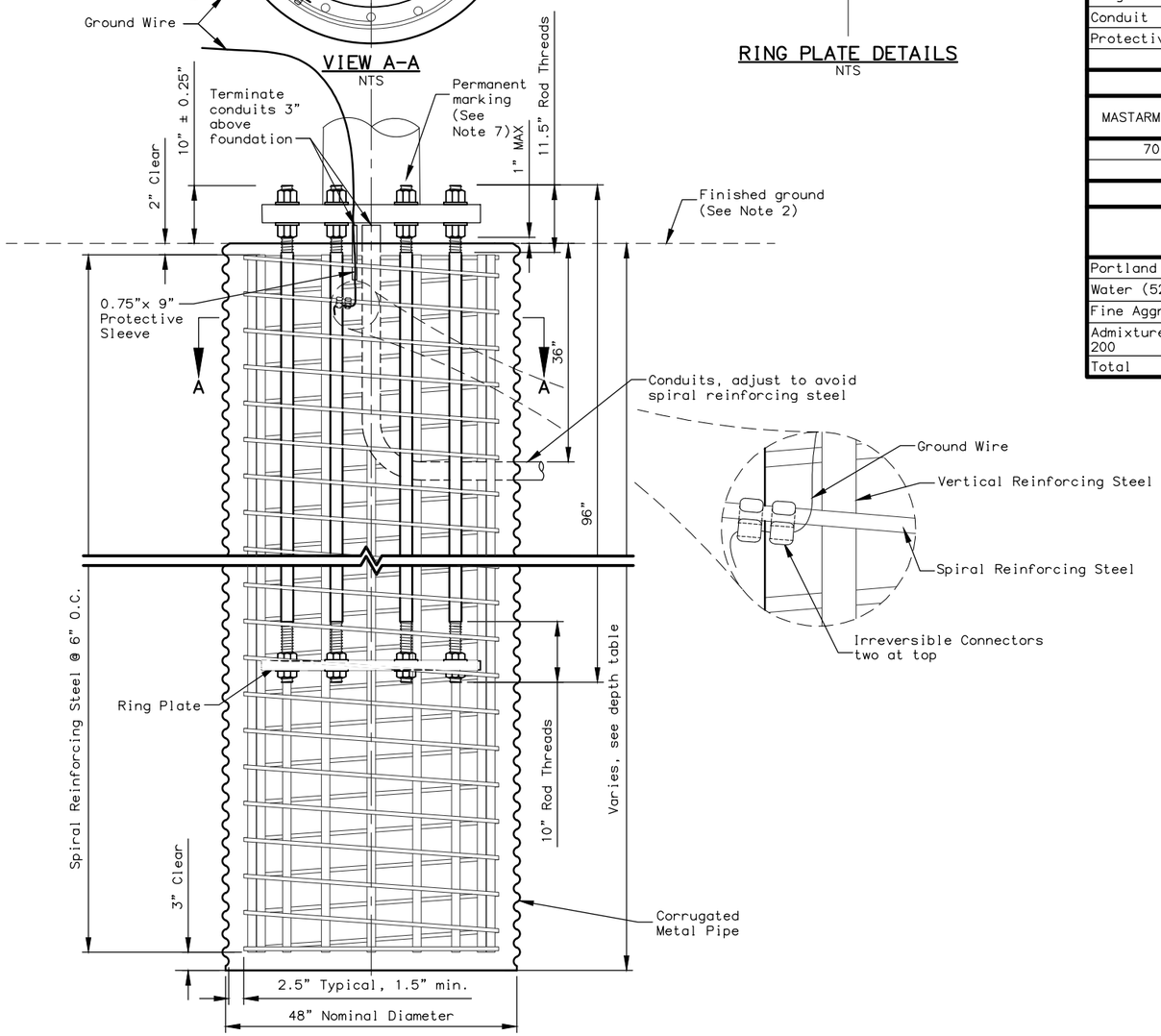


FOUNDATION DETAILS
NTS
(Skirt omitted for clarity)

## MATERIAL REQUIREMENTS

| | | |
|---|---|---|
| Concrete | Class A | f'c = 4000 psi |
| CMP | AASHTO M218 | 14 ga. |
| Vertical Reinforcing Steel | AASHTO M31 #11 | GR 60 |
| Spiral Reinforcing Steel | AASHTO M31 #5 | GR 60 |
| Ground Wire | | #4 AWG |
| Anchor Rods 2" X 96" | ASTM F1554 S2, S3, & S5 | GR 105 |
| Fasteners, Washers | ASTM F436 | |
| Fasteners, Nuts | AASHTO M292M | |
| Finish, Anchor Rods & Fasteners | AHTO M232 | |
| Ring Plate | AASHTO M270 | GR 36 |
| Conduit | Sch 40 | RMC |
| Protective Sleeve | Sch 40 | PVC |

## DEPTH TABLE

| MASTARM(S) LENGTH (ft.) | FOUNDATION DEPTH BY APPLICATION (ft.) | |
|---|---|---|
| | SINGLE MASTARM | DOUBLE MASTARM |
| 70 <= L <= 75 | 12 | 15 |

## SAND SLURRY MIX DESIGN

| ITEM | BATCHING QUANTITIES PER CY BATCH (lbs.) | APPLICABLE SPECS. |
|---|---|---|
| Portland Cement | 188 | 701-2.01 |
| Water (52.1 gal.) | 435 | 712-2.01 |
| Fine Aggregate SSD | 3041 | 703-2.01 |
| Admixture MasterAir AE 200 | 2.0 oz. | 711-2.02 |
| Total | 3664 | |

## DESIGN NOTES:

Design Standard: 2013 Standard Specifications for Structural Supports for Highway Signs, Luminaires and Traffic Signals with 2013 Errata and 2015 Interim Revision.

Design Load: 7,500 lbs axial, 7,500 lbs shear, 200,000 ft-lbs moment.

Specifications: Latest edition of the State Of Alaska Standard Specifications for Highway Construction with Special Provisions.

## NOTES:

1. This foundation is approved for traffic signal applications in cohesionless soils with an N1-60 value of 10 or greater per AASHTO T-206, "Standard Penetration Test" (SPT). This foundation shall not be used if any of the following are encountered; water table above the bottom of foundation, very loose soils, organic soils, cohesive soils (clay), or soils susceptible to frost jacking. If any of these conditions are encountered, stop foundation work and contact the Engineer.
2. Place foundation in drilled or excavated hole with centerline of foundation located at the station, offset, and elevation specified in plans. Set foundation flush with surrounding surface. Grade to drain away from foundation without exposing more than 4" of the foundation from the surrounding ground surface.
3. Form the foundation in corrugated metal pipe conforming to Subsection 707-2.01 of the Specifications.
4. Provide 1.5 extra turns at each end of the spiral reinforcing steel. Reinforcing steel shall not be spliced. Tie vertical reinforcing steel to each intersection of the spiral reinforcing steel.
5. Connect ground wire near the top spiral reinforcing steel with two irreversible connectors as shown. Fasten connectors according to the manufacturers' recommendations including the use of manufacturer specified tools. The ground wire may be bare solid, stranded, or braided copper. Protect ground wire with protective sleeve as shown and fill with silicon sealant.
6. The Ring Plate May be "built up" of multiple steel plates. The minimum thickness for any one plate is 0.5 inches. Fasten the ring plate to anchor rods with nuts and washers on both sides of ring plate as shown. Torque ring plate nuts to 600 ft-lbs.
7. Anchor rods are subject to Charpy V-Notch Impact Testing. Submit mill certifications for anchor rods, nuts and washers. Galvanize anchor rods full length. Provide permanent manufacturer's identification and permanent grade identification on each end of anchor rod by steel die stamp. Secure exposed anchor rods with a "ring plate" when not in service. Install anchor rods plumb. Anchor rods greater than 1:40 out-of-plumb will result in foundation rejection.
8. Complete all concrete work in conformance with Sections 501, 503, and 660 of the Specifications. Use a tremie, tube or other approved device per Subsection 501-3.05. Vibrate concrete during placement by mechanical vibration per Subsection 501-3.06. Ensure upper anchor rod threads are protected from contact with concrete during pour.
9. Backfill and compact according to Section 204, and Subsections 203-3.04 and 660-3.01 of the Specifications. Use select material, Type A or sand slurry as backfill material. Ensure area below foundation meets compaction requirements and is free of loose material and debris prior to concrete work.

State of Alaska DOT&PF
ALASKA STANDARD PLAN

# CONCRETE 48" FOUNDATION SIGNAL POLE FOUNDATION

Adopted as an Alaska Standard Plan by: Carolyn Morehouse
Carolyn Morehouse, P.E.
Chief Engineer

Adoption Date: 07/17/2020

Last Code and Stds. Review
By: Date:

Next Code and Standards Review date: 07/17/2030

| POLE DESIGN LOADING | | | | | | |
|---|---|---|---|---|---|---|
| Load Component | Height (ft.) | Weight (lbs.) | Ice Area (sq. ft.) | Wind Area (Face) (sq. ft.) | Wind Area (Side) (sq. ft.) | Fatigue Area (Bottom) (sq. ft) |
| 1 = Luminaire | 0.5 | 25 | 8.1 | 0.6 | 1.0 | 2.5 |
| 2 = Signal | 4.2 | 54 | 20.2 | 6.9 | 4.8 | 1.4 |
| 3 = Signal | 5.3 | 70 | 25.8 | 8.9 | 6.4 | 1.4 |
| 4 = Ped Head | 1.4 | 22 | 7.8 | 2.2 | 0.9 | 0.9 |
| 5 = Sign | 2.5 | 120 | 30.0 | 30.0 | 0.8 | 4.0 |

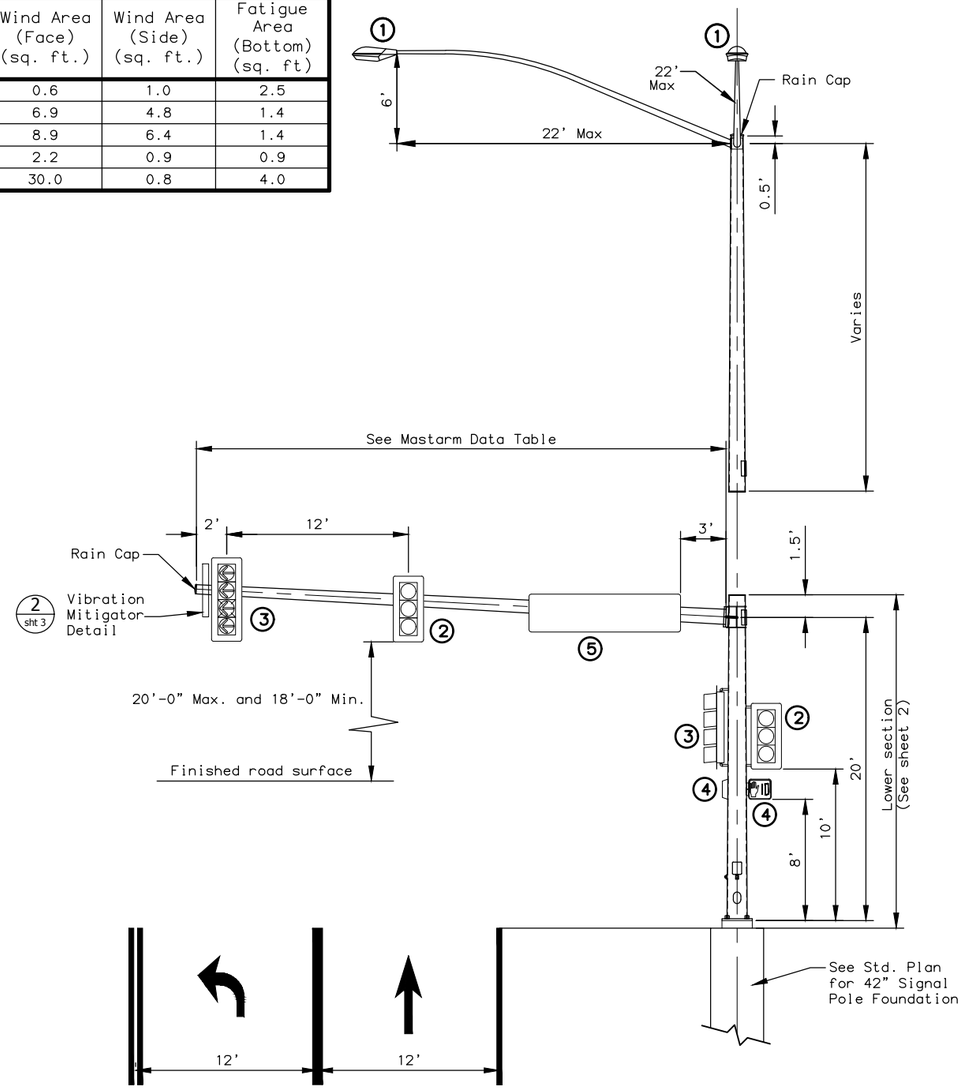


**ELEVATION VIEW**

NTS

## NOTES:

1. Provide pole assemblies designed, manufactured and installed according to: 2013 AASHTO Standard Specifications for Structural Supports for Highway Signs, Luminaires and Traffic Signals with 2013 Errata and 2015 Interim Revision, the latest edition of the Alaska Standard Specifications for Highway Construction including standard modifications, and special provisions. Design structures for a 50-year Design Life, Fatigue Category I with ice loading. Fatigue design shall include Natural Wind Gust, Truck-Induced Gust, and an approved vibration mitigating device in lieu of Galloping effect.

2. Provide poles to accommodate the maximum length shown in the mastarm data with the given loads, dimensions, and material requirements.

3. This drawing shows loads (signs and signals) to be used by manufacturers when designing poles. It does not show actual loading of poles/mastarms on individual projects. This pole/mastarm design may be used without further analysis if the following conditions are met:
   - The guide sign (load #5) is attached to the mastarm base section and,
   - Not more than 5 traffic signals and/or signs are attached to the mastarm.

   If these conditions are not met, this standard pole/mastarm design may only be used if design computations are submitted that demonstrate conformance to design criteria (note 1) using actual loads. Devices with less than 1 square foot of projected area may be added to the mastarm without causing a need for additional design computations.

4. The manufacturer is to determine weld sizes. All welds and testing shall conform to the latest edition of the structural welding code AWS D1.1. Provide visual testing (VT) of 100% of all welds. Provide magnetic particle testing (MT) of 100% of all fillet welds. Provide radiographic (RT) or ultrasonic testing (UT) of 100% of all complete joint penetration welds and a random 25% of all partial joint penetration longitudinal seam welds.

5. Fabricate pole tubes and mastarm tubes from no more than 2 pieces of steel. When using 2 pieces, place the longitudinal welded seams directly opposite one another. Transverse weld seams prohibited.

6. Fabricate luminaire arms and connections according to the latest lighting standard detail.

7. Provide permanent tags on all pole sections per section 740 table 740-1 of the specifications. Provide a weather proof rain cap on all exposed sections of the structure.

8. The Department will reject damaged or defective poles for any of the following; variances from approved shop drawings, variances from material requirements, sections more than 2-percent out of round, flanged mounting surfaces with flatness variation greater than 0.030", sections bowed more than 1-inch throughout the length of the pole, mastarm, or segment, and damaged or dented finishes.

9. To allow for wiring, field drill a 1" maximum diameter hole at each traffic signal head location. Orient the hole on the horizontal axis of mastarms.

10. Install pole raked outward from plumb position in the direction opposite the mastarm such that the side of the pole opposite the mastarm is vertical.

11. Clean and remove dirt, burrs, mill scale, and excess galvanization on all faying surfaces and threaded parts before assembly. Lubricate the threads of all bolts and nuts with lubricant containing a visible dye. Tighten all bolts according to section 504 of the specifications.

| MASTARM DATA | | | | | | |
|---|---|---|---|---|---|---|
| MASTARM | | | | MASTARM BASEPLATE | | |
| Length (ft.) | Maximum Allowed Galloping Defliction (in.) | Fixed End Diameter* (in.) | Tube Thickness (in.) | Plate Opening Diameter (in.) | Bolt Circle Diameter (in.) | Plate Thickness (in.) |
| 15 | 8.0 | 9.38 | 0.239 | 4.0 | 20.0 | 3.0 |
| 20 | 8.0 | 10.05 | 0.239 | 4.0 | 20.0 | 3.0 |
| 25 | 8.0 | 10.75 | 0.239 | 4.0 | 20.0 | 3.0 |
| 30 | 8.0 | 11.45 | 0.239 | 4.0 | 20.0 | 3.0 |
| 35 | 8.0 | 12.15 | 0.239 | 4.0 | 20.0 | 3.0 |

*Fixed end diameter measured at connection to Baseplate

State of Alaska DOT&PF
ALASKA STANDARD PLAN

SIGNAL POLE
WITH 15' TO 35' MASTARM
LOADING & NOTES

Adopted as an Alaska Standard Plan by: Carolyn Morehouse
Carolyn Morehouse, P.E.
Chief Engineer

Adoption Date: 07/17/2020

Last Code and Stds. Review
By: Date:

Next Code and Standards Review date: 07/17/2030

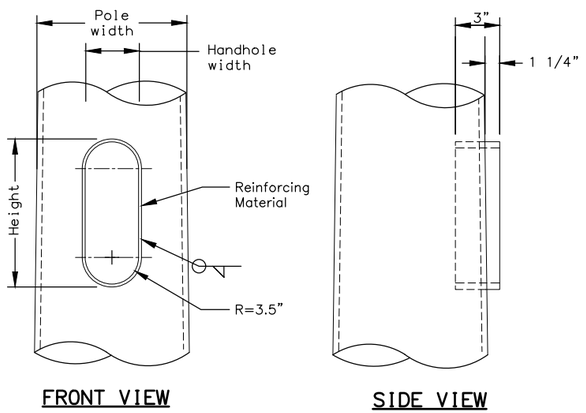


1 - REINFORCED HANDHOLE DETAILS
(See material requirements table for dimensions)
NTS

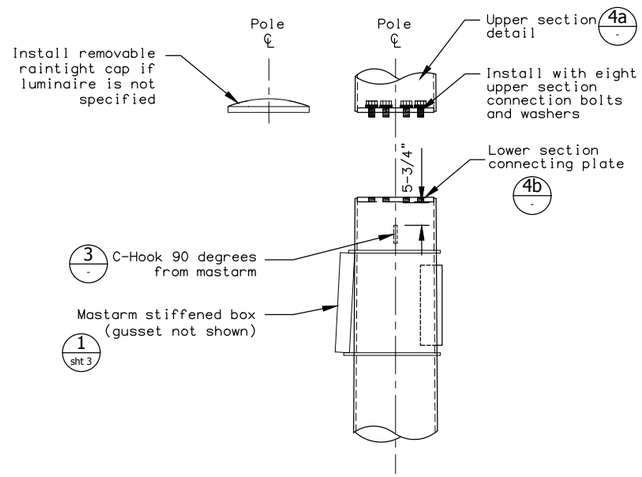


4 - POST TOP LOWER SECTION DETAIL

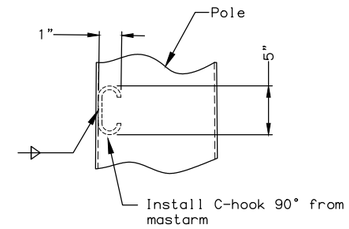


3 - C-HOOK DETAIL
(Typical throughout lower section)
NTS

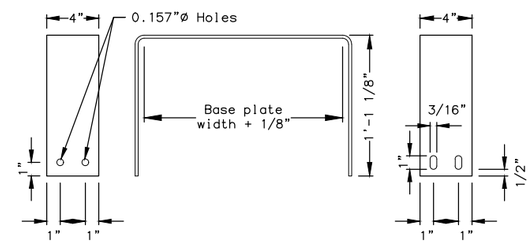


2 - SKIRT DETAIL
NTS
(Two required per pole)

| MATERIAL REQUIREMENTS | |
|---|---|
| MATERIAL QUALITY GUIDANCE | |
| Steel ≤1/2" Thick | ASTM A572 OR A595 |
| Steel > 1/2" Thick | AASHTO M270 F3 (50ksi) |
| Finish | AASHTO M111 & M232 |
| Mastarm Bolts | AASHTO M164 |
| Mastarm Washers | ASTM F436 |
| Anchor Rods | See T-52.21 |
| | |
| POLE (LOWER SECTION) | |
| Design Length | 21.50' |
| Section Shape | Round |
| Simplex Height | 20.0' |
| Taper | 0.14'/ft |
| Diameter Bolt Circle | 24.0" |
| Diameter Concentric Opening | 10.0" |
| Tube Thickness | .375" |
| Fixed End Diameter | 15.0" OD |
| Base Plate | 24" x 24" x 3" |
| Backing Ring | 0.25" x 3" |
| | |
| HANDHOLE DIMENSIONS | |
| Outside Dimensions | 7" x 12.89" |
| Reinforcing Material | 0.5" x 3" |
| Handhole Cover | 0.125" |
| | |
| MISCELLANEOUS | |
| Post Top Connecting Plates | 1.00" |
| Pole Skirt | 0.125" |
| C-Hook | 0.50" |

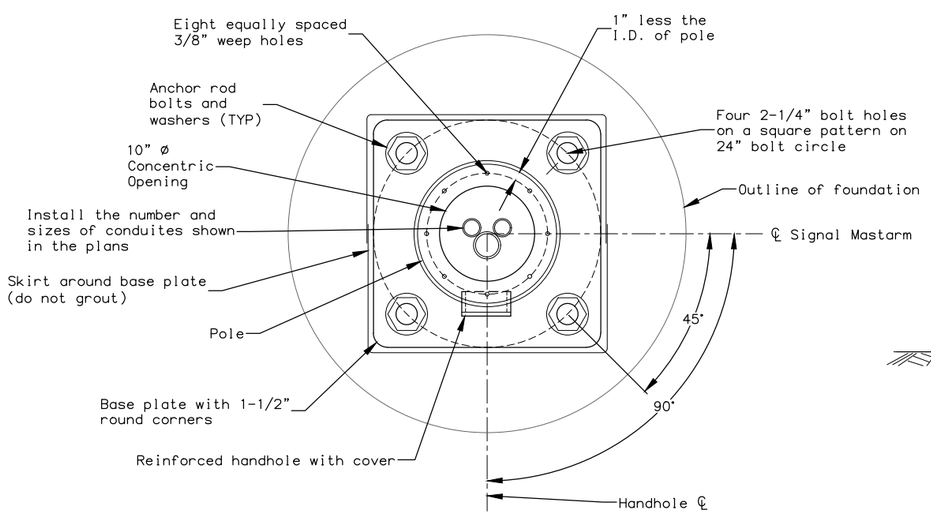


PLAN VIEW
(Shown without anchor bolts and nuts for clarity)

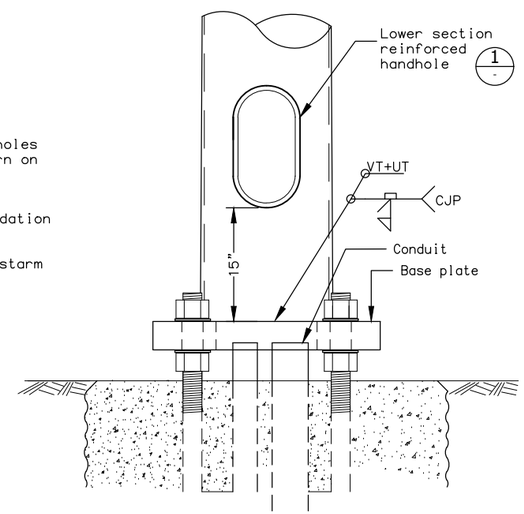


FRONT VIEW
(Skirt omitted for clarity) 2

5 - POLE BASE DETAILS
NTS

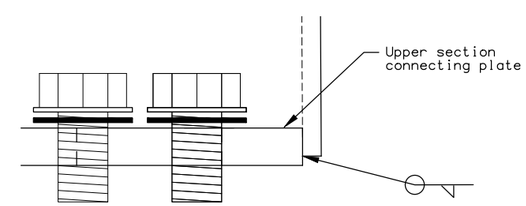


4a - POST TOP UPPER SECTION CONNECTING PLATE

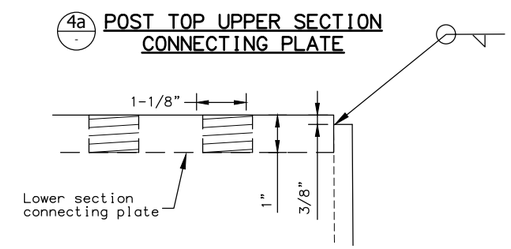


4b - POST TOP LOWER SECTION CONNECTING PLATE

State of Alaska DOT&PF
ALASKA STANDARD PLAN

SIGNAL POLE
WITH 15' TO 35' MASTARM
LOWER SECTION

Adopted as an Alaska Standard Plan by: Carolyn Morehouse
Carolyn Morehouse, P.E.
Chief Engineer

Adoption Date: 07/17/2020

Last Code and Stds. Review
By: Date:

Next Code and Standards Review date:07/17/2030

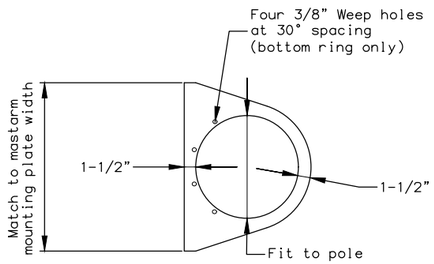


RING DETAIL

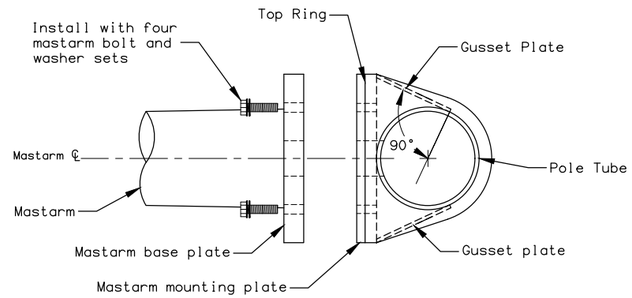


SECTION B-B

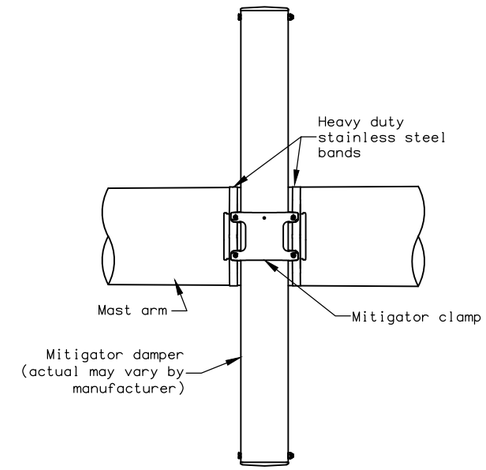


2

VIBRATION MITIGATOR CONNECTION DETAIL

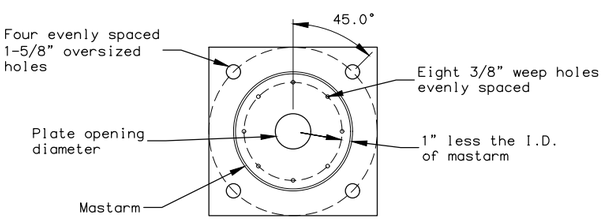


MASTARM BASE PLATE

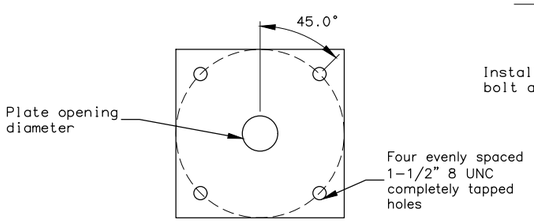


MASTARM MOUNTING PLATE

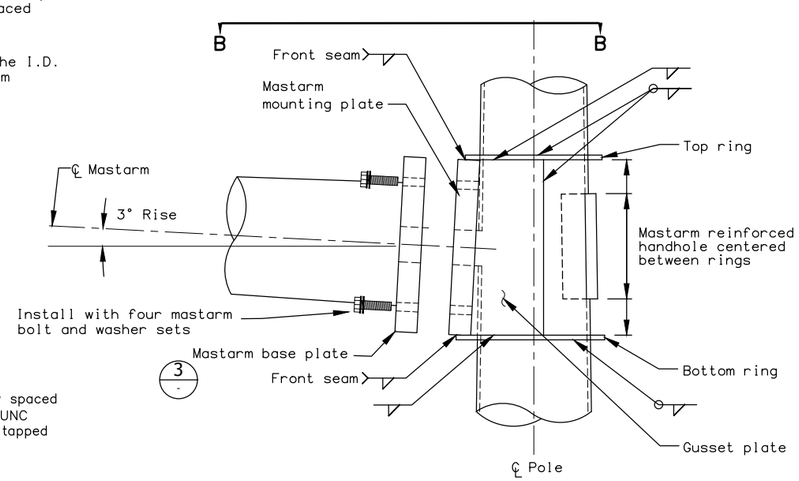


3

SIDE VIEW

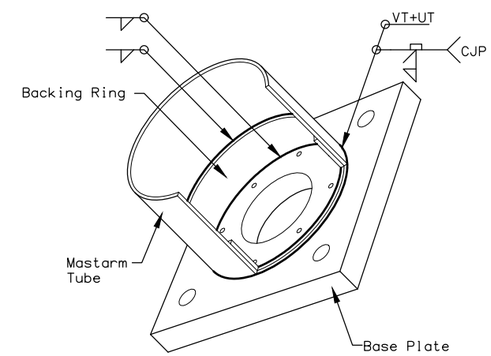


ISO VIEW

TUBE TO TRANSVERSE PLATE WELD DETAIL

3

(Shown with tube and backing ring cutout for clairity)

1 RING - STIFFENED BOX DETAILS

NTS

| MATERIAL REQUIREMENTS | |
|---|---|
| MATERIAL QUALITY GUIDANCE | |
| Steel ≤ 1/2" Thick | ASTM A572 OR A595 |
| Steel > 1/2" Thick | AASHTO M270 F3 (50ksi) |
| Finish | AASHTO M111 & M232 |
| Mastarm Bolts | AASHTO M164 |
| Mastarm Washers | ASTM F436 |
| Anchor Rods | See T-52.20 |
| | |
| RING-STIFFENED BOX | |
| Mastarm Mounting Plate | 20" x 20" x 3" |
| Plate Opening Diameter | Mastarm Data (See Sheet 1) |
| Top Ring Thickness | 0.375" |
| Bottom Ring Thickness | 0.375" |
| Gusset Plate Thickness | 0.375" |
| | |
| MASTARM HANDHOLE | |
| Outside Dimensions | 7" x 12.89" |
| Reinforcing Material | 0.5" x 3" |
| Handhold Cover | 0.125" |
| | |
| MASTARM | |
| Design Length | 35' |
| Section Shape | Round |
| Taper | 0.14"/ft |
| Bolt Circle Diameter | Mastarm Data (See Sheet 1) |
| Plate Opening Diameter | Mastarm Data (See Sheet 1) |
| Mastarm Tube Thickness | Mastarm Data (See Sheet 1) |
| Fixed End Diameter | Mastarm Data (See Sheet 1) |
| Mastarm Rise | 3.0 Degrees |
| Mastarm Baseplate | 20" x 20" x 3" |
| Backing Ring | 0.25" x 3" |
| Mastarm Bolts | 1.5" 6 UNC x 5.5" |

State of Alaska DOT&PF
ALASKA STANDARD PLAN

SIGNAL POLE
WITH 15' TO 35' MASTARM
MASTARM & STIFFENED BOX

Adopted as an Alaska Standard Plan by: Carolyn Morehouse
Carolyn Morehouse, P.E.
Chief Engineer

Adoption Date: 07/17/2020

Last Code and Stds. Review
By: Date:

Next Code and Standards Review date: 07/17/2030

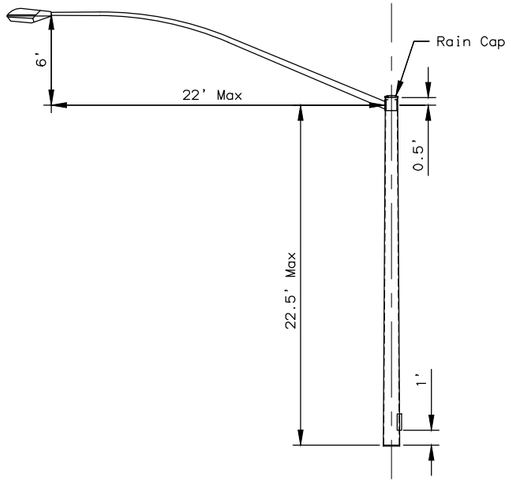


SINGLE LUMINAIRE

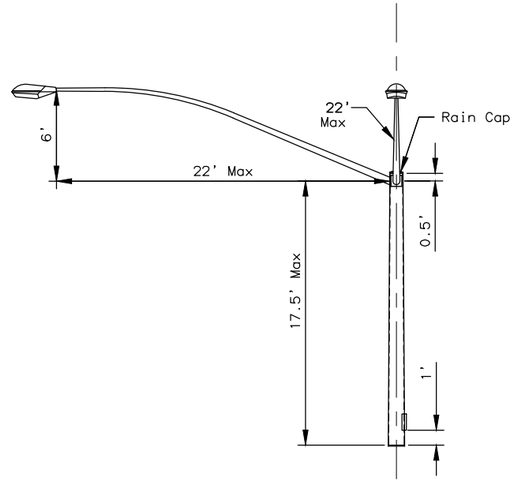


DOUBLE LUMINAIRE

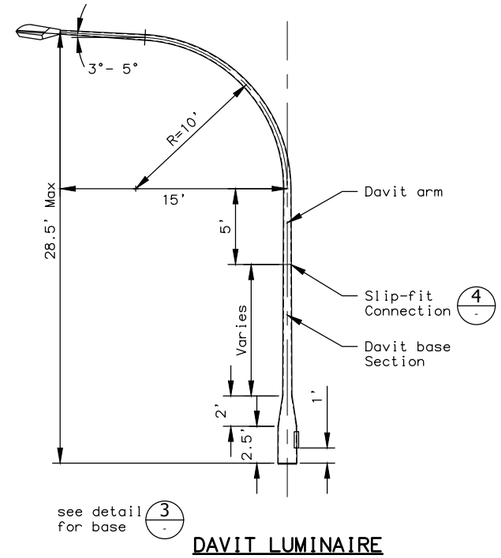


DAVIT LUMINAIRE

## UPPER SECTION OPTIONS

NTS

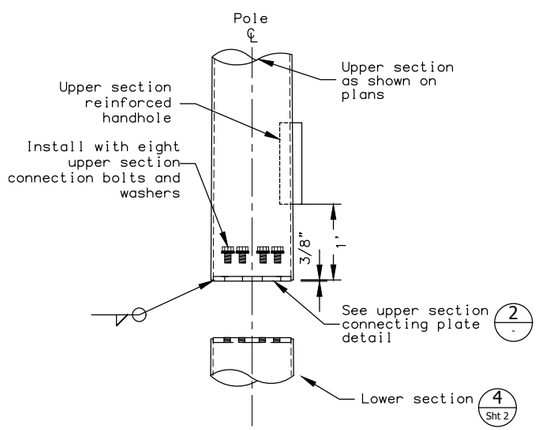


1 POST TOP STANDARD UPPER SECTION BASE DETAIL

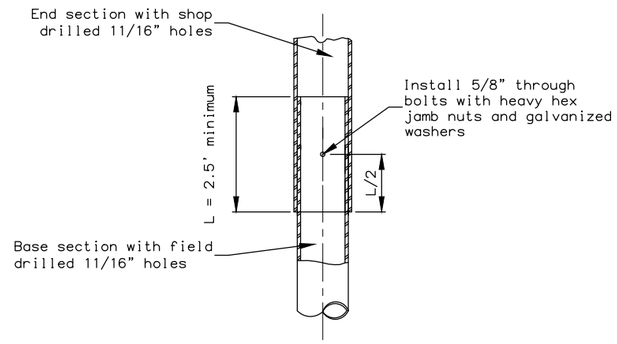


4 MASTARM SLIP SPLICE ELEVATION DETAIL

NTS

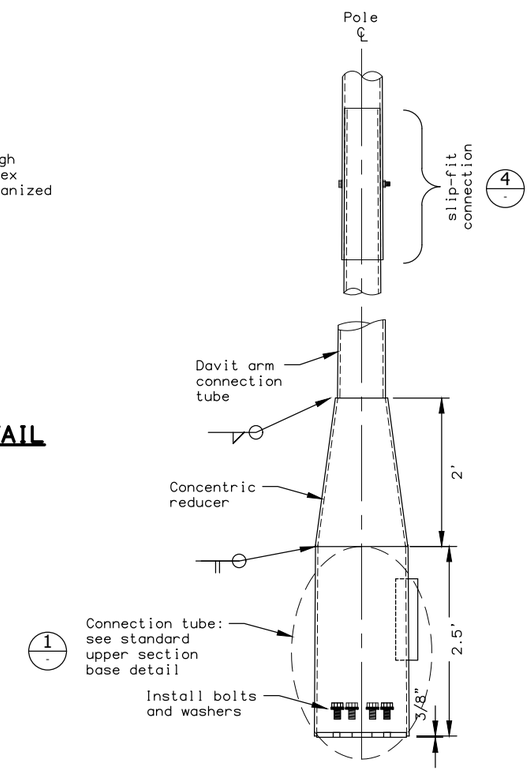


3 DAVIT UPPER SECTION BASE DETAIL

NTS

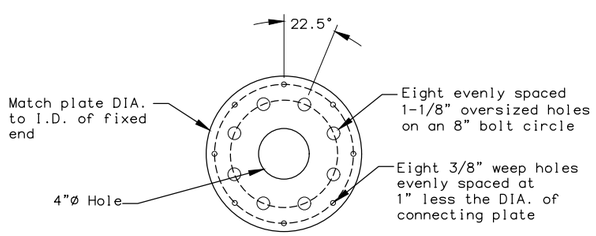


2 POST TOP CONNECTING PLATE DETAIL

| MATERIAL REQUIREMENTS | |
|---|---|
| MATERIAL QUALITY GUIDANCE | |
| Tube Material | A572, A595 GR A, or A1011 (50ksi min) |
| Post Top Connecting Plates | AASHTO M270 F3 |
| Concentric Reducer | A572 OR A595 GR A |
| Connection Tube | A572 OR A595 GR A |
| Luminaire, Arm, and Mounting | See Lighting Standard Details |
| Upper Section Connection Bolts | AASHTO M164 |
| Upper Section Connection Washers | ASTM F436 |
| Slip Fit Through Bolt | AASHTO M164 |
| Finish | AASHTO M111 & M232 |
| | |
| STANDARD UPPER SECTION | |
| Fixed End Diameter | 11.99" O.D. |
| Taper | 0.14"/ft |
| Connecting Plate Thickness | 1" |
| Post Top Connection Bolts | 1" 8 UNC x 2.75" |
| Tube Thickness | 7 GA |
| | |
| HANDHOLE DIMENSIONS | |
| Upper Section Handhole | 7" x 12.89" |
| Reinforcing Material | 0.5" x 3" |
| Handhole Cover | 0.125" |
| | |
| SINGLE LUMINAIRE | |
| Design Length | 22.5' |
| Section Shape | Round |
| | |
| DOUBLE LUMINAIRE | |
| Design Length | 17.5' |
| Section Shape | Round |
| | |
| DAVIT LUMINAIRE | |
| Design Length | 28.5' |
| Section Shape | Round |
| Taper | 0.14'/ft |
| Free End Diameter | 2.375" O.D. |
| Connection Tube | 7 GA |
| Concentric Reducer | 7 GA |
| Davit Arm Connection Tube | 7 GA |
| Davit Arm | 7 GA |

State of Alaska DOT&PF
ALASKA STANDARD PLAN

SIGNAL POLE
WITH 15' TO 35' MASTARM
UPPER SECTION

Adopted as an Alaska Standard Plan by: Carolyn Morehouse
Carolyn Morehouse, P.E.
Chief Engineer

Adoption Date: 07/17/2020

Last Code and Stds. Review
By: Date:

Next Code and Standards Review date: 07/17/2030

| POLE DESIGN LOADING | | | | | | |
|---|---|---|---|---|---|---|
| Load Component | Height (ft.) | Weight (lbs.) | Ice Area (sq. ft.) | Wind Area (Face) (sq. ft.) | Wind Area (Side) (sq. ft.) | Fatigue Area (Bottom) (sq. ft) |
| 1 = Luminaire | 0.5 | 25 | 8.1 | 0.6 | 1.0 | 2.5 |
| 2 = Signal | 4.2 | 54 | 20.2 | 6.9 | 4.8 | 1.4 |
| 3 = Signal | 5.3 | 70 | 25.8 | 8.9 | 6.4 | 1.4 |
| 4 = Ped Head | 1.4 | 22 | 7.8 | 2.2 | 0.9 | 0.9 |
| 5 = Sign | 2.5 | 120 | 30.0 | 30.0 | 0.8 | 4.0 |

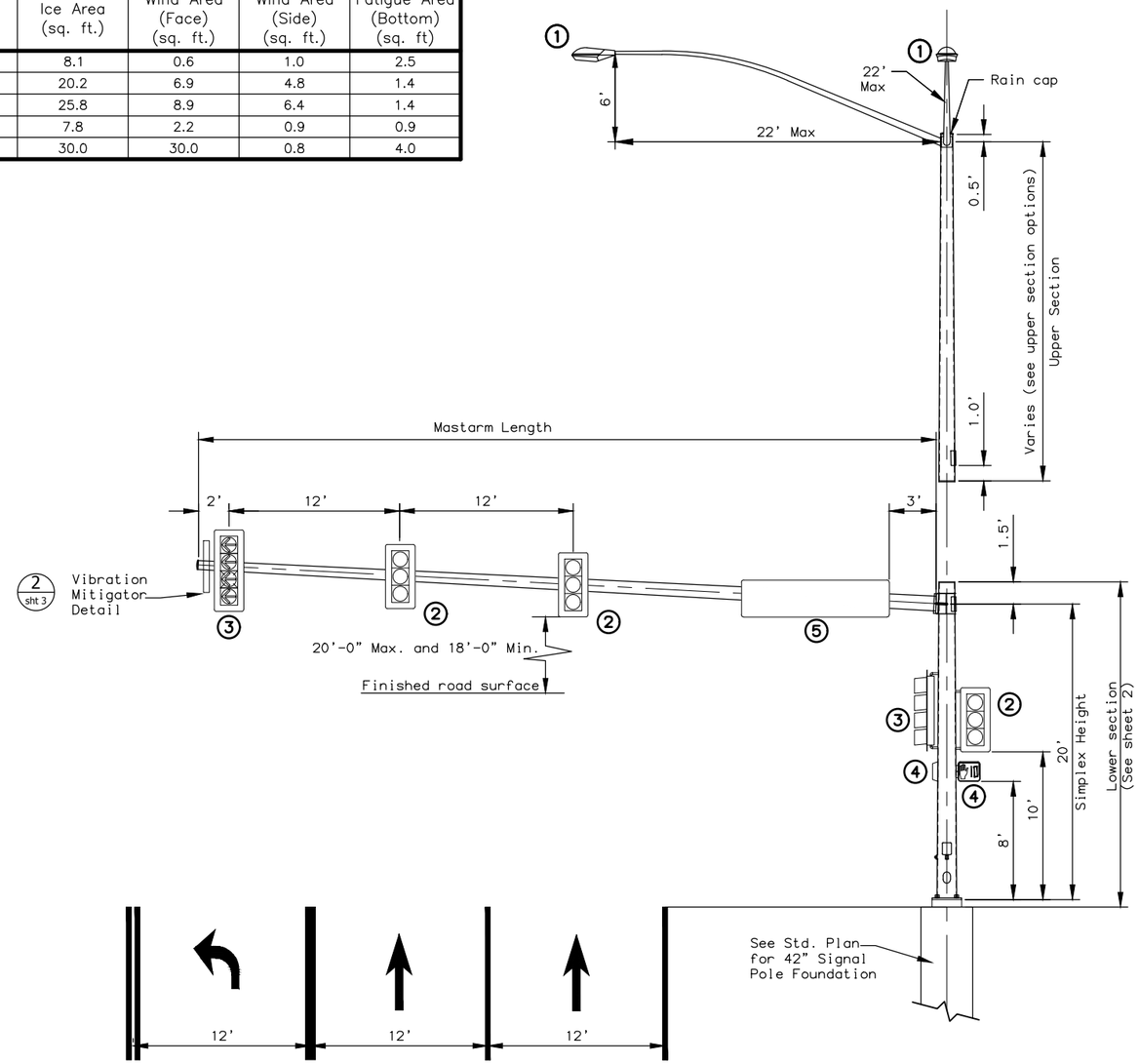


## ELEVATION VIEW

## NOTES:

1. Provide pole assemblies designed, manufactured and installed according to: 2013 AASHTO Standard Specifications for Structural Supports for Highway Signs, Luminaires and Traffic Signals with 2013 Errata and 2015 Interim Revision, the latest edition of the Alaska Standard Specifications for Highway Construction including standard modifications, and special provisions. Design structures for a 50-year Design Life, Fatigue Category I with ice loading. Fatigue design shall include Natural Wind Gust, Truck-Induced Gust, and an approved vibration mitigating device in lieu of Galloping effect.

2. Provide poles to accommodate the maximum length shown in the mastarm data with the given loads, dimensions, and material requirements.

3. This drawing shows loads (signs and signals) to be used by manufacturers when designing poles. It does not show actual loading of poles/mastarms on individual projects. This pole/mastarm design may be used without further analysis if the following conditions are met:
   - The guide sign (load #5) is attached to the mastarm base section and,
   - Not more than 5 traffic signals and/or signs are attached to the mastarm.

   If these conditions are not met, this standard pole/mastarm design may only be used if design computations are submitted that demonstrate conformance to design criteria (note 1) using actual loads. Devices with less than 1 square foot of projected area may be added to the mastarm without causing a need for additional design computations.

4. The manufacturer is to determine weld sizes. All welds and testing shall conform to the latest edition of the structural welding code AWS D1.1. Provide visual testing (VT) of 100% of all welds. Provide magnetic particle testing (MT) of 100% of all fillet welds. Provide radiographic (RT) or ultrasonic testing (UT) of 100% of all complete joint penetration welds and a random 25% of all partial joint penetration longitudinal seam welds.

5. Fabricate pole tubes and mastarm tubes from no more than 2 pieces of steel. When using 2 pieces, place the longitudinal welded seams directly opposite one another. Transverse weld seams prohibited.

6. Fabricate luminaire arms and connections according to the latest lighting standard detail.

7. Provide permanent tags on all pole sections per section 740 table 740-1 of the specifications. Provide a weather proof rain cap on all exposed sections of the structure.

8. The Department will reject damaged or defective poles for any of the following; variances from approved shop drawings, variances from material requirements, sections more than 2-percent out of round, flanged mounting surfaces with flatness variation greater than 0.030", sections bowed more than 1-inch throughout the length of the pole, mastarm, or segment, and damaged or dented finishes.

9. To allow for wiring, field drill a 1" maximum diameter hole at each traffic signal head location. Orient the hole on the horizontal axis of mastarms.

10. Install pole raked outward from plumb position in the direction opposite the mastarm such that the side of the pole opposite the mastarm is vertical.

11. Clean and remove dirt, burrs, mill scale, and excess galvanization on all faying surfaces and threaded parts before assembly. Lubricate the threads of all bolts and nuts with lubricant containing a visible dye. Tighten all bolts according to section 504 of the specifications.

| MASTARM DATA | | | | | | | | | | |
|---|---|---|---|---|---|---|---|---|---|---|
| MASTARM | | MASTARM END SECTION | | | MASTARM BASE SECTION | | | MASTARM BASEPLATE | | |
| Length (ft.) | Maximum Allowed Galloping Deflection (in.) | Free End Diameter (in.) | Length (ft.) | Tube Thickness (in.) | Length (ft.) | Fixed End Diameter* (in.) | Tube Thickness (in.) | Plate Opening Diameter (in.) | Bolt Circle Diameter (in.) | Plate Thickness (in.) |
| 40 | 8.0 | 7.3 | 25.0 | 0.1793 | 18.34 | 12.5 | 0.3125 | 4.0 | 22.0 | 3.0 |
| 45 | 8.0 | 7.3 | 25.0 | 0.1793 | 23.34 | 13.2 | 0.3125 | 4.0 | 22.0 | 3.0 |
| 50 | 8.0 | 7.3 | 25.0 | 0.1793 | 28.34 | 13.9 | 0.3125 | 4.0 | 22.0 | 3.0 |

*Fixed end diameter measured at connection to Baseplate

State of Alaska DOT&PF
ALASKA STANDARD PLAN

SIGNAL POLE
WITH 40' TO 50' MASTARM
LOADING & NOTES

Adopted as an Alaska Standard Plan by: Carolyn Morehouse
Carolyn Morehouse, P.E.
Chief Engineer

Adoption Date: 07/17/2020

Last Code and Stds. Review
By: Date:

Next Code and Standards Review date: 07/17/2030

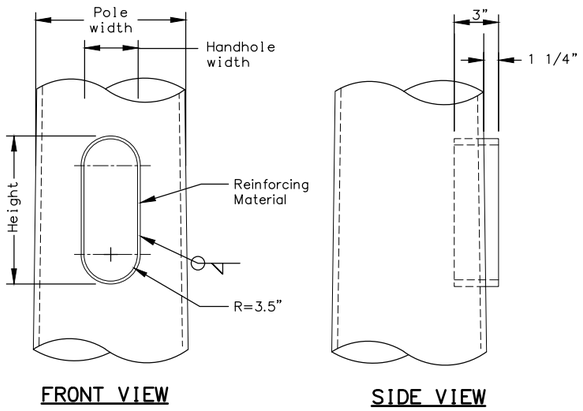


1 REINFORCED HANDHOLE DETAILS
(See material requirements table for dimensions)
NTS

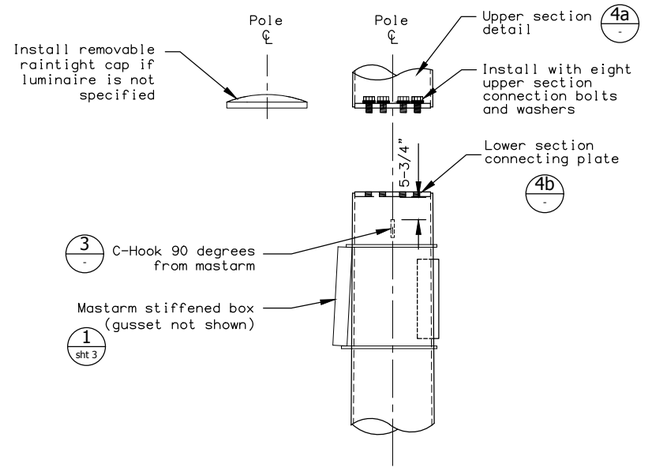


4 LOWER SECTION POST TOP DETAIL

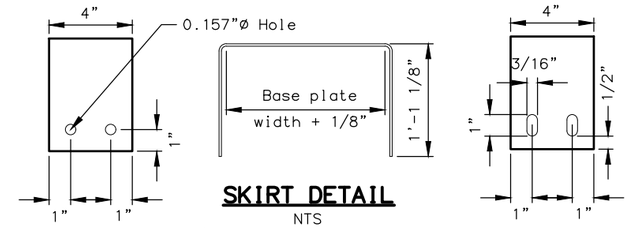


SKIRT DETAIL
NTS
(Two required per pole)

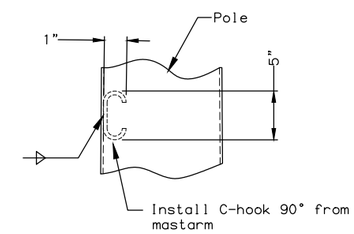


3 C-HOOK DETAIL
(Typical throughout lower section)
NTS

| MATERIAL REQUIREMENTS | |
|---|---|
| MATERIAL QUALITY GUIDANCE | |
| Steel ≤ 1/2" Thick | ASTM A572 OR A595 |
| Steel > 1/2" Thick | AASHTO M270 F3 (50ksi) |
| Finish | AASHTO M111 & M232 |
| Mastarm Bolts | AASHTO M164 |
| Mastarm Washers | ASTM F436 |
| Anchor Rods | See T–52.21 |
| | |
| POLE (LOWER SECTION) | |
| Design Length | 21.50' |
| Section Shape | Round |
| Simplex Height | 20.0' |
| Taper | 0.14'/ft |
| Baseplate Bolt Circle Diameter | 24.0" |
| Diameter Concentric Opening | 12.0" |
| Tube Thickness | 0.375" |
| Fixed End Diameter | 17.0" OD |
| Base Plate | 24" x 24" x 3" |
| Backing Ring | 0.25" x 3" |
| | |
| HANDHOLE DIMENSIONS | |
| Outside Dimensions | 7" x 12.89" |
| Reinforcing Material | 0.5" x 3" |
| Handhole Cover | 0.125" |
| | |
| MISCELLANEOUS | |
| Post Top Connecting Plates | 1.00" |
| Pole Skirt | 0.125" |
| C–Hook | 0.50" |

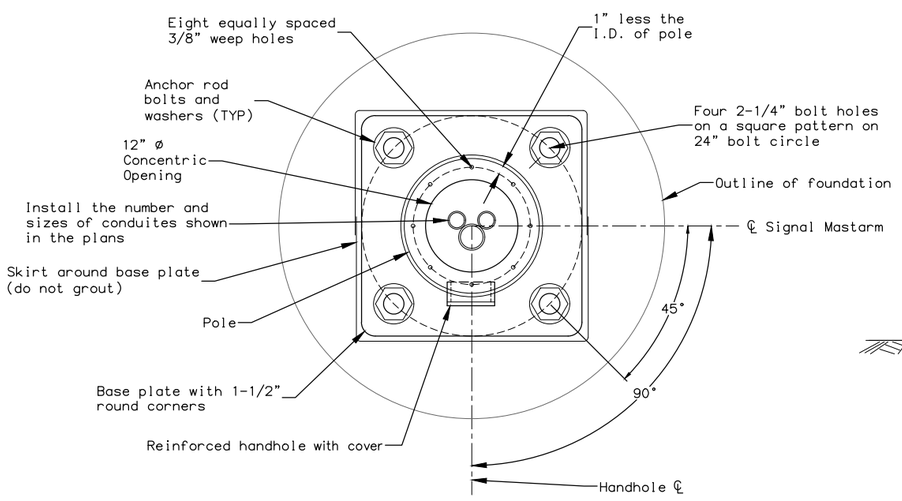


PLAN VIEW
(Shown without anchor bolts and nuts for clarity)

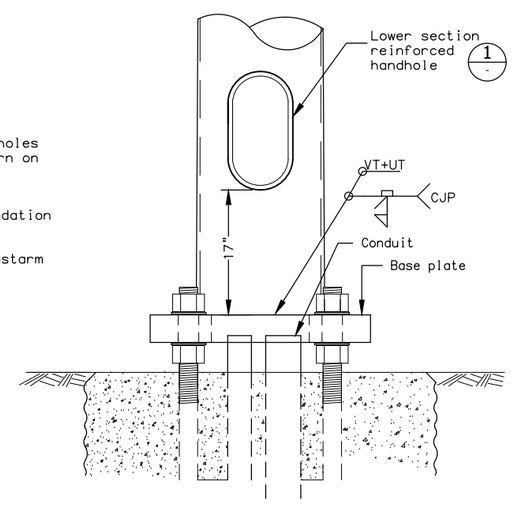


FRONT VIEW
(Skirt omitted for clarity) 2

5 POLE BASE DETAILS
NTS

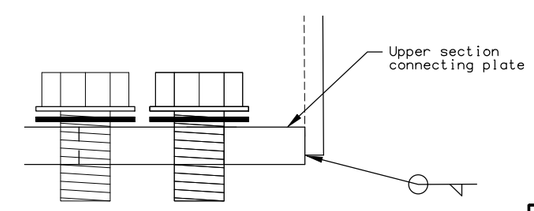


4a POST TOP UPPER SECTION CONNECTING PLATE

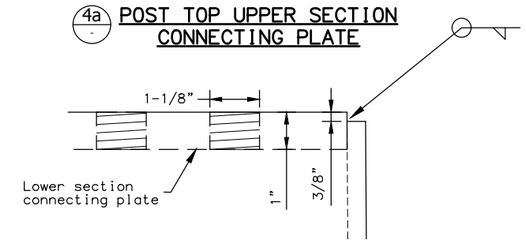


4b POST TOP LOWER SECTION CONNECTING PLATE

State of Alaska DOT&PF
ALASKA STANDARD PLAN

SIGNAL POLE
WITH 40' TO 50' MASTARM
LOWER SECTION

Adopted as an Alaska Standard Plan by: Carolyn Morehouse
Carolyn Morehouse, P.E.
Chief Engineer

Adoption Date: 07/17/2020

Last Code and Stds. Review
By: Date:

Next Code and Standards Review date: 07/17/2030

T–55.10

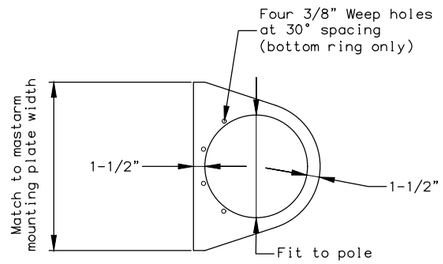


RING DETAIL

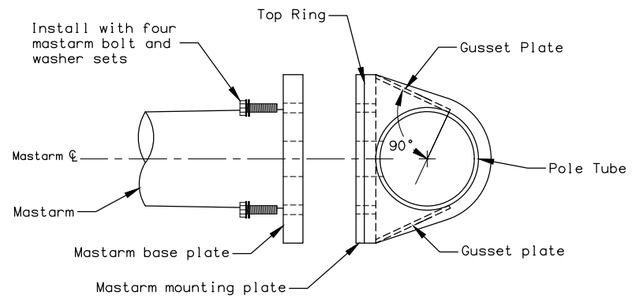


SECTION B-B

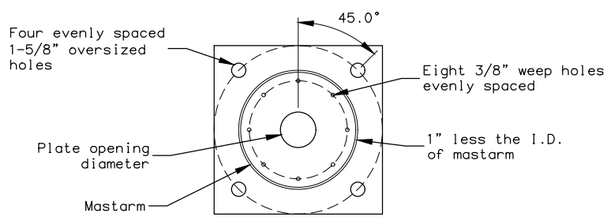


MASTARM BASE PLATE

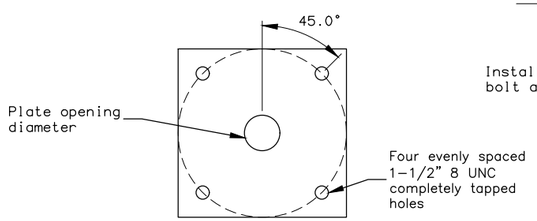


MASTARM MOUNTING PLATE

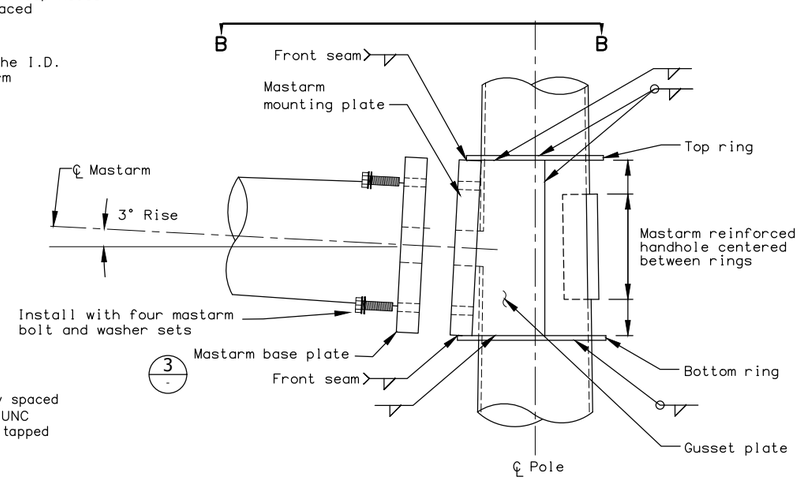


3

SIDE VIEW

1 RING - STIFFENED BOX DETAILS

NTS

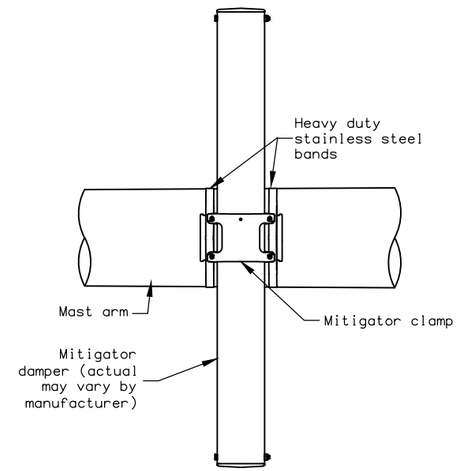


2 VIBRATION MITIGATOR CONNECTION DETAIL

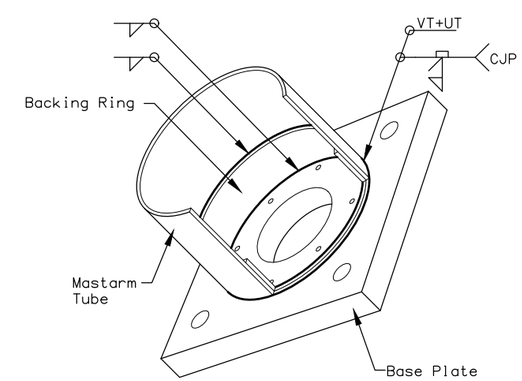


ISO VIEW

3 TUBE TO TRANSVERSE PLATE WELD DETAIL

(Shown with tube and backing ring cutout for clairity)

| MATERIAL REQUIREMENTS | |
|---|---|
| MATERIAL QUALITY GUIDANCE | |
| Steel ≤ 1/2" Thick | ASTM A572 OR A595 |
| Steel > 1/2" Thick | AASHTO M270 F3 (50ksi) |
| Finish | AASHTO M111 & M232 |
| Mastarm Bolts | AASHTO M164 |
| Mastarm Washers | ASTM F436 |
| Anchor Rods | See T–52.20 |
| | |
| RING–STIFFENED BOX | |
| Mastarm Mounting Plate | 22" x 22" x 3" |
| Plate Opening Diameter | Mastarm Data (See Sheet 1) |
| Top Ring Thickness | 0.375" |
| Bottom Ring Thickness | 0.375" |
| Gusset Plate Thickness | 0.375" |
| | |
| MASTARM HANDHOLE | |
| Outside Dimensions | 7" x 12.89" |
| Reinforcing Material | 0.5" x 3" |
| Handhold Cover | 0.125" |
| | |
| MASTARM | |
| Design Length | 50' |
| Section Shape | Round |
| Bolt Circle Diameter | Mastarm Data (See Sheet 1) |
| Plate Opening Diameter | Mastarm Data (See Sheet 1) |
| Mastarm Tube Thickness | Mastarm Data (See Sheet 1) |
| Fixed End Diameter | Mastarm Data (See Sheet 1) |
| Mastarm Rise | 3.0 Degrees |
| Mastarm Baseplate | 22" x 22" x 3" |
| Backing Ring | 0.25" x 3" |
| Mastarm Bolts | 1.5" 6 UNC x 5.5" |

State of Alaska DOT&PF
ALASKA STANDARD PLAN

SIGNAL POLE
WITH 40' TO 50' MASTARM
MASTARM & STIFFENED BOX

Adopted as an Alaska Standard Plan by: Carolyn Morehouse
Carolyn Morehouse, P.E.
Chief Engineer

Adoption Date: 07/17/2020

Last Code and Stds. Review
By: Date:

Next Code and Standards Review date: 07/17/2030

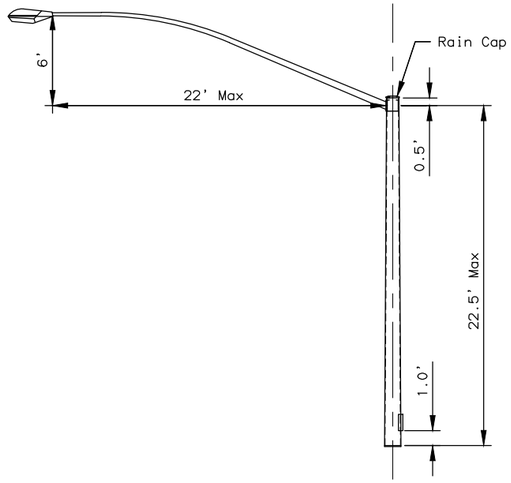


SINGLE LUMINAIRE

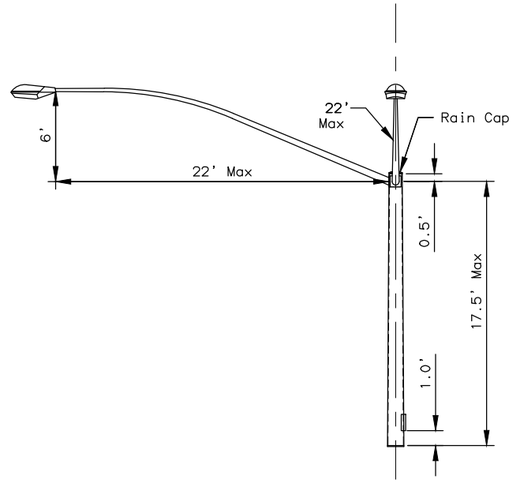


DOUBLE LUMINAIRE

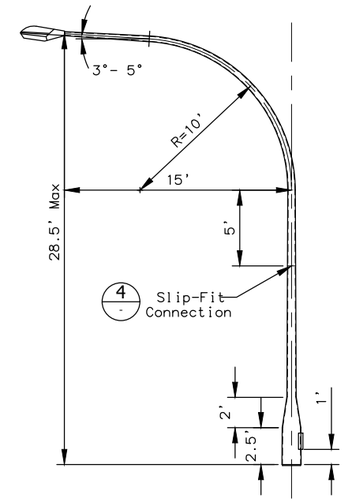


DAVIT LUMINAIRE

## UPPER SECTION OPTIONS

NTS

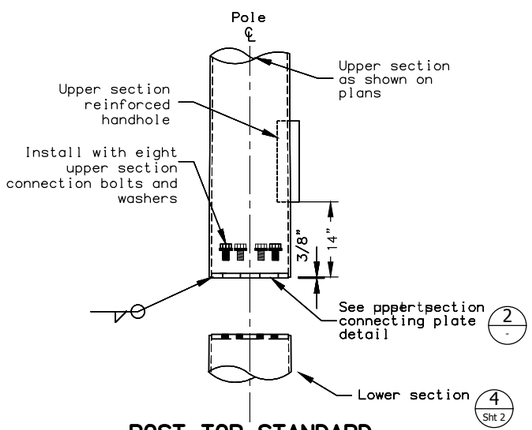


1 POST TOP STANDARD UPPER SECTION BASE DETAIL

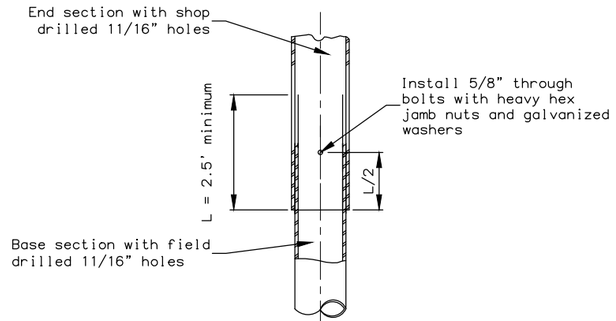


4 MASTARM SLIP SPLICE ELEVATION DETAIL

NTS

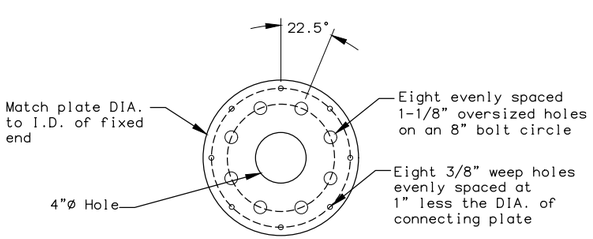


2 POST TOP CONNECTING PLATE DETAIL

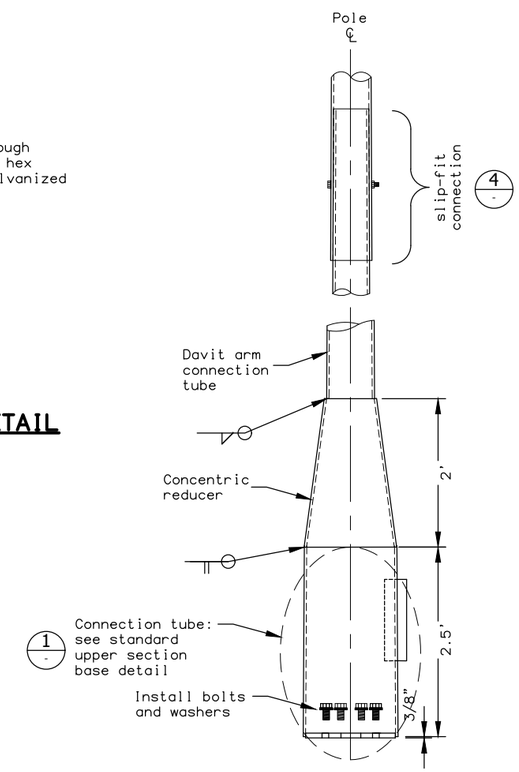


3 DAVIT UPPER SECTION BASE DETAIL

NTS

| MATERIAL REQUIREMENTS | |
|---|---|
| MATERIAL QUALITY GUIDANCE | |
| Tube Material | A572, A595 GR A, or A1011 (50ksi min) |
| Post Top Connecting Plates | AASHTO M270 F3 |
| Concentric Reducer | A572 OR A595 GR A |
| Connection Tube | A572 OR A595 GR A |
| Luminaire, Arm, and Mounting | See Lighting Standard Details |
| Upper Section Connection Bolts | AASHTO M164 |
| Upper Section Connection Washers | ASTM F436 |
| Slip Fit Through Bolt | AASHTO M164 |
| Finish | AASHTO M111 & M232 |
| | |
| STANDARD UPPER SECTION | |
| Fixed End Diameter | 13.99" O.D. |
| Taper | 0.14"/ft |
| Connecting Plate Thickness | 1" |
| Post Top Connection Bolts | 1" 8 UNC x 2.75" |
| Tube Thickness | 7 GA |
| | |
| HANDHOLE DIMENSIONS | |
| Upper Section Handhole | 7" x 12.89" |
| Reinforcing Material | 0.5" x 3" |
| Handhole Cover | 0.125" |
| | |
| SINGLE LUMINAIRE | |
| Design Length | 22.5' |
| Section Shape | Round |
| | |
| DOUBLE LUMINAIRE | |
| Design Length | 17.5' |
| Section Shape | Round |
| | |
| DAVIT LUMINAIRE | |
| Design Length | 28.5' |
| Section Shape | Round |
| Taper | 0.14'/ft |
| Free End Diameter | 2.375" O.D. |
| Connection Tube | 7 GA |
| Concentric Reducer | 7 GA |
| Davit Arm Connection Tube | 7 GA |
| Davit Arm | 7 GA |

State of Alaska DOT&PF
ALASKA STANDARD PLAN

SIGNAL POLE
WITH 40' TO 50' MASTARM
UPPER SECTION

Adopted as an Alaska Standard Plan by: Carolyn Morehouse
Carolyn Morehouse, P.E.
Chief Engineer

Adoption Date: 07/17/2020

Last Code and Stds. Review
By: Date:

Next Code and Standards Review date: 07/17/2030

T-55.10

| POLE DESIGN LOADING | | | | | | |
|---|---|---|---|---|---|---|
| Load Component | Height (ft.) | Weight (lbs.) | Ice Area (sq. ft.) | Wind Area (Face) (sq. ft.) | Wind Area (Side) (sq. ft.) | Fatigue Area (Bottom) (sq. ft) |
| 1 = Luminaire | 0.5 | 25 | 8.1 | 0.6 | 1.0 | 2.5 |
| 2 = Signal | 4.2 | 54 | 20.2 | 6.9 | 4.8 | 1.4 |
| 3 = Signal | 5.3 | 70 | 25.8 | 8.9 | 6.4 | 1.4 |
| 4 = Ped Head | 1.4 | 22 | 7.8 | 2.2 | 0.9 | 0.9 |
| 5 = Sign | 2.5 | 120 | 30.0 | 30.0 | 0.8 | 4.0 |

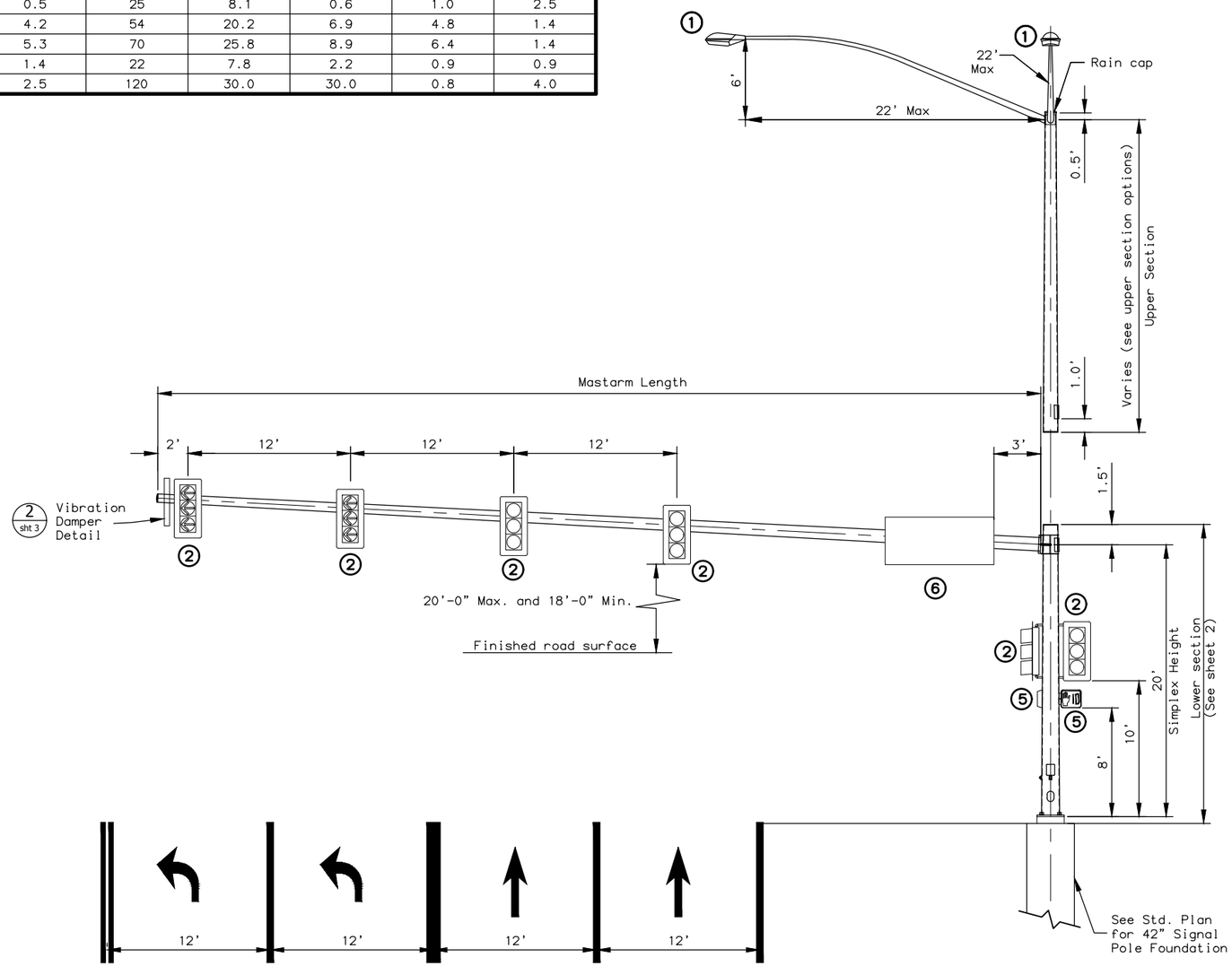


## ELEVATION VIEW

NTS

## NOTES:

1. Provide pole assemblies designed, manufactured and installed according to: 2013 AASHTO Standard Specifications for Structural Supports for Highway Signs, Luminaires and Traffic Signals with 2013 Errata and 2015 Interim Revision, the latest edition of the Alaska Standard Specifications for Highway Construction including standard modifications, and special provisions. Design structures for a 50-year Design Life, Fatigue Category I with ice loading. Fatigue design shall include Natural Wind Gust, Truck-Induced Gust, and an approved vibration mitigating device in lieu of Galloping effect.

2. Provide poles to accommodate the maximum length shown in the mastarm data with the given loads, dimensions, and material requirements.

3. This drawing shows loads (signs and signals) to be used by manufacturers when designing poles. It does not show actual loading of poles/mastarms on individual projects. This pole/mastarm design may be used without further analysis if the following conditions are met:
   - The guide sign (load #5) is attached to the mastarm base section and,
   - Not more than 5 traffic signals and/or signs are attached to the mastarm.

   If these conditions are not met, this standard pole/mastarm design may only be used if design computations are submitted that demonstrate conformance to design criteria (note 1) using actual loads. Devices with less than 1 square foot of projected area may be added to the mastarm without causing a need for additional design computations.

4. The manufacturer is to determine weld sizes. All welds and testing shall conform to the latest edition of the structural welding code AWS D1.1. Provide visual testing (VT) of 100% of all welds. Provide magnetic particle testing (MT) of 100% of all fillet welds. Provide radiographic (RT) or ultrasonic testing (UT) of 100% of all complete joint penetration welds and a random 25% of all partial joint penetration longitudinal seam welds.

5. Fabricate pole tubes and mastarm tubes from no more than 2 pieces of steel. When using 2 pieces, place the longitudinal welded seams directly opposite one another. Transverse weld seams prohibited.

6. Fabricate luminaire arms and connections according to the latest lighting standard detail.

7. Provide permanent tags on all pole sections per section 740 table 740-1 of the specifications. Provide a weather proof rain cap on all exposed sections of the structure.

8. The Department will reject damaged or defective poles for any of the following; variances from approved shop drawings, variances from material requirements, sections more than 2-percent out of round, flanged mounting surfaces with flatness variation greater than 0.030", sections bowed more than 1-inch throughout the length of the pole, mastarm, or segment, and damaged or dented finishes.

9. To allow for wiring, field drill a 1" maximum diameter hole at each traffic signal head location. Orient the hole on the horizontal axis of mastarms.

10. Install pole raked outward from plumb position in the direction opposite the mastarm such that the side of the pole opposite the mastarm is vertical.

11. Clean and remove dirt, burrs, mill scale, and excess galvanization on all faying surfaces and threaded parts before assembly. Lubricate the threads of all bolts and nuts with lubricant containing a visible dye. Tighten all bolts according to section 504 of the specifications.

| MASTARM DATA | | | | | | | | | |
|---|---|---|---|---|---|---|---|---|---|
| MASTARM | | MASTARM END SECTION | | | MASTARM BASE SECTION | | | MASTARM BASEPLATE | |
| Length (ft.) | Maximum Allowed Galloping Deflection (in.) | Free End Diameter (in.) | Length (ft.) | Tube Thickness (in.) | Length (ft.) | Fixed End Diameter* (in.) | Tube Thickness (in.) | Plate Opening Diameter (in.) | Plate Thickness (in.) |
| 55 | 10.0 | 7.3 | 25.0 | 0.1793 | 33.34 | 14.6 | 0.375 | 4.0 | 3.0 |
| 60 | 10.0 | 7.3 | 25.0 | 0.1793 | 38.34 | 15.3 | 0.375 | 4.0 | 3.0 |
| 65 | 10.0 | 7.3 | 25.0 | 0.1793 | 43.34 | 16.0 | 0.375 | 4.0 | 3.0 |

*Fixed end diameter measured at connection to Baseplate

State of Alaska DOT&PF
ALASKA STANDARD PLAN

SIGNAL POLE
WITH 55' TO 65' MASTARM
LOADING & NOTES

Adopted as an Alaska Standard Plan by: Carolyn Morehouse
Carolyn Morehouse, P.E.
Chief Engineer

Adoption Date: 07/17/2020

Last Code and Stds. Review
By: Date:

Next Code and Standards Review date: 07/17/2030

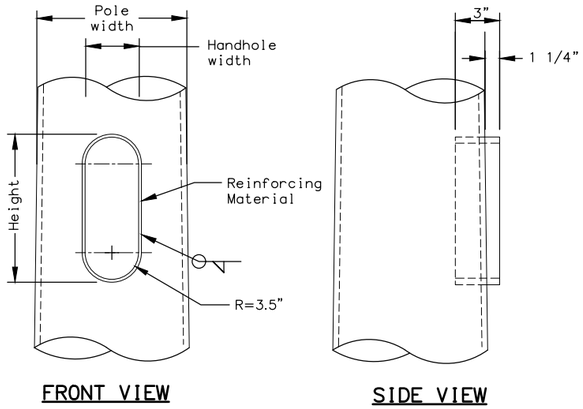


1/- REINFORCED HANDHOLE DETAILS
(See material requirements table for dimensions)
NTS

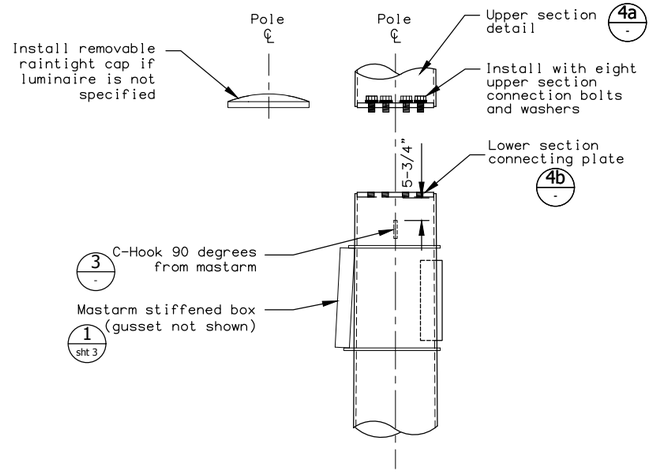


4/- LOWER SECTION POST TOP DETAIL

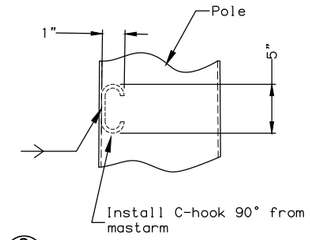


3/- C-HOOK DETAIL
(Typical throughout lower section)
NTS

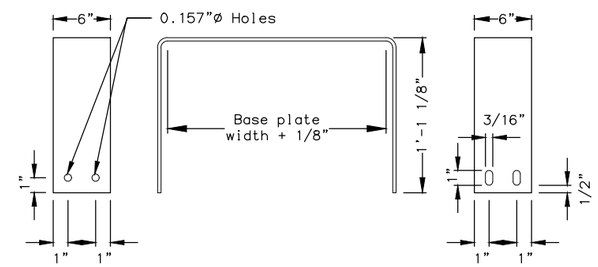


2/- SKIRT DETAIL
NTS
(Two required per pole)

| MATERIAL REQUIREMENTS | |
|---|---|
| MATERIAL QUALITY GUIDANCE | |
| Steel ≤1/2" Thick | ASTM A572 OR A595 |
| Steel > 1/2" Thick | AASHTO M270 F3 (50ksi) |
| Finish | AASHTO M111 & M232 |
| Mastarm Bolts | ASTM F1325, Grade A325 |
| Mastarm Washers | ASTM F436 |
| Anchor Rods | See T-52.21 |
| | |
| POLE (LOWER SECTION) | |
| Design Length | 21.50' |
| Section Shape | Round |
| Simplex Height | 20.0' |
| Taper | 0.14'/ft |
| Baseplate Bolt Circle Diameter | 24.0" |
| Diameter Concentric Opening | 12.0" |
| Tube Thickness | 0.375" |
| Fixed End Diameter | 19.0" OD |
| Base Plate | 24" x 24" x 3" |
| Backing Ring | 0.25" x 3" |
| | |
| HANDHOLE DIMENSIONS | |
| Outside Dimensions | 7" x 12.89" |
| Reinforcing Material | 0.5" x 3" |
| Handhole Cover | 0.125" |
| | |
| MISCELLANEOUS | |
| Post Top Connecting Plates | 1.00" |
| Pole Skirt | 0.125" |
| C-Hook | 0.50" |

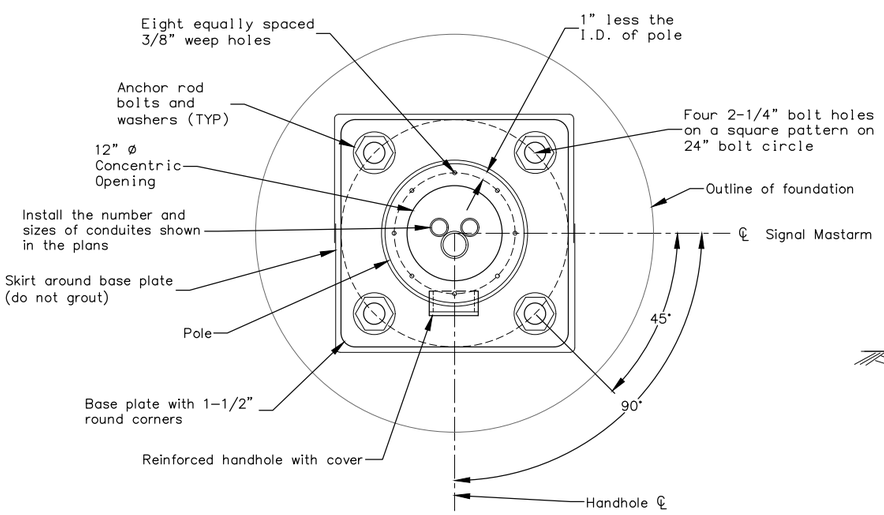


PLAN VIEW
(Shown without anchor bolts and nuts for clarity)

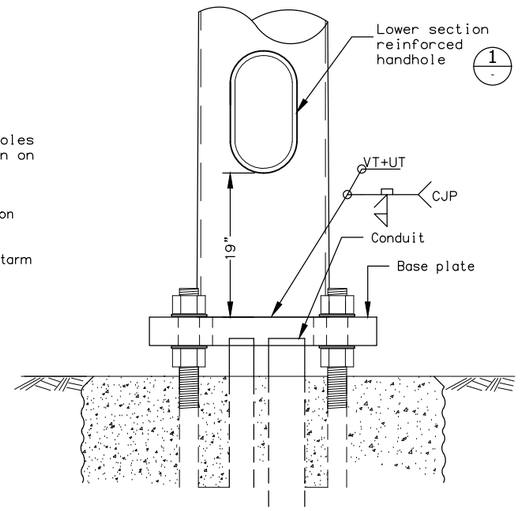


FRONT VIEW
(Skirt omitted for clarity) 2/-

5/- POLE BASE DETAILS
NTS

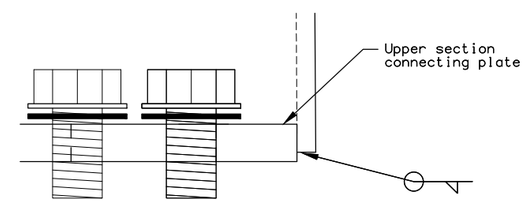


4a/- POST TOP UPPER SECTION CONNECTING PLATE

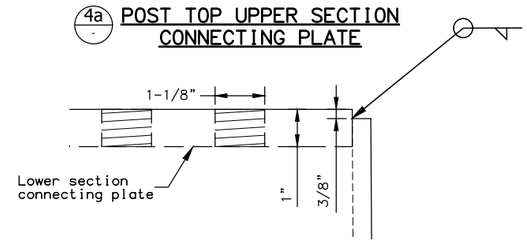


4b/- POST TOP LOWER SECTION CONNECTING PLATE

State of Alaska DOT&PF
ALASKA STANDARD PLAN

SIGNAL POLE
WITH 55' TO 65' MASTARM
LOWER SECTION

Adopted as an Alaska Standard Plan by: Carolyn Morehouse
Carolyn Morehouse, P.E.
Chief Engineer

Adoption Date: 07/17/2020

Last Code and Stds. Review
By: Date:

Next Code and Standards Review date: 07/17/2030

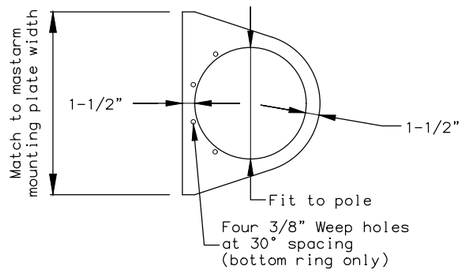


RING DETAIL

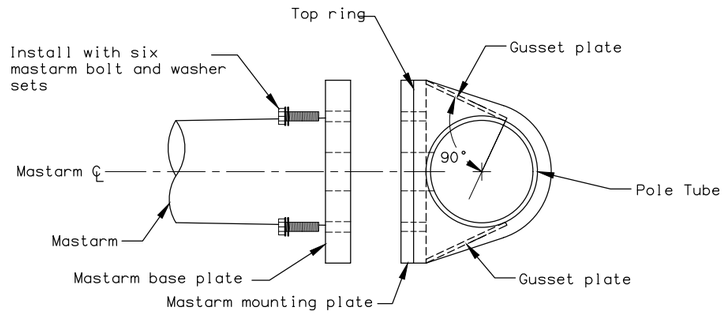


SECTION B-B

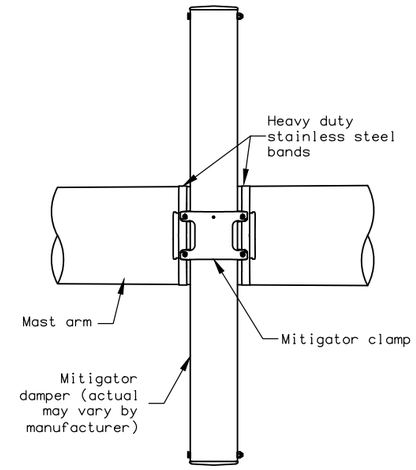


2 VIBRATION MITIGATOR CONNECTION DETAIL

| MATERIAL REQUIREMENTS | |
|---|---|
| MATERIAL QUALITY GUIDANCE | |
| Steel ≤1/2" Thick | ASTM A572 OR A595 |
| Steel > 1/2" Thick | AASHTO M270 F3 (50ksi) |
| Finish | AASHTO M111 & M232 |
| Mastarm Bolts | ASTM F1325, Grade A325 |
| Mastarm Washers | ASTM F436 |
| Anchor Rods | See T-52.20 |
| | |
| RING-STIFFENED BOX | |
| Mastarm Mounting Plate | 24" x 24" x 3" |
| Plate Opening Diameter | 4" Minimum |
| Top Ring Thickness | 0.375" |
| Bottom Ring Thickness | 0.375" |
| Gusset Plate Thickness | 0.375" |
| | |
| MASTARM HANDHOLE | |
| Outside Dimensions | 7" x 12.89" |
| Reinforcing Material | 0.5" x 3" |
| Handhold Cover | 0.125" |
| | |
| MASTARM | |
| Design Length | 65' |
| Section Shape | Round |
| Plate Opening Diameter | Mastarm Data (See Sheet 1) |
| Mastarm Tube Thickness | Mastarm Data (See Sheet 1) |
| Fixed End Diameter | Mastarm Data (See Sheet 1) |
| Mastarm Rise | 3.5 Degrees |
| Mastarm Baseplate | 24" x 24" x 3" |
| Backing Ring | 0.25" x 3" |
| Mastarm Bolts | 1.5" 6 UNC x 5.5" |

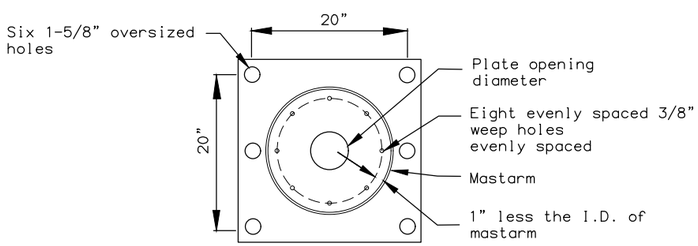


MASTARM BASE PLATE

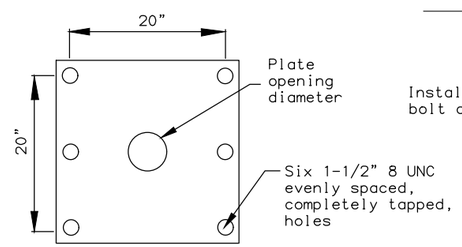


MASTARM MOUNTING PLATE

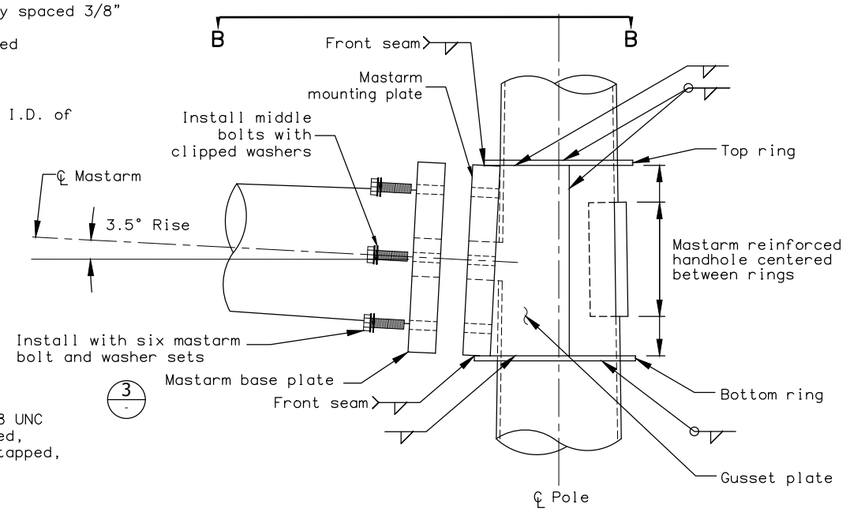


SIDE VIEW

1 RING - STIFFENED BOX DETAILS

NTS

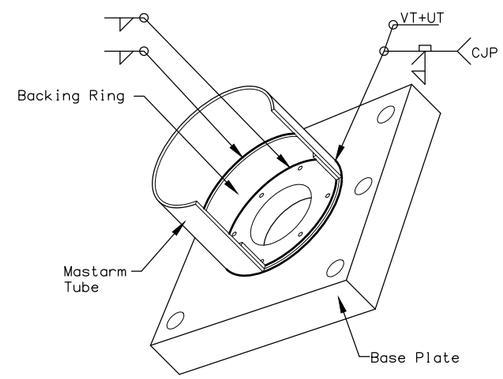


ISO VIEW

TUBE TO TRANSVERSE PLATE WELD DETAIL

3 (Shown with tube and backing ring cutout for clairity)

State of Alaska DOT&PF
ALASKA STANDARD PLAN

SIGNAL POLE
WITH 55' TO 65' MASTARM
MASTARM & STIFFENED BOX

Adopted as an Alaska Standard Plan by: Carolyn Morehouse
Carolyn Morehouse, P.E.
Chief Engineer

Adoption Date: 07/17/2020

Last Code and Stds. Review
By: Date:

Next Code and Standards Review date: 07/17/2030

T-56.10

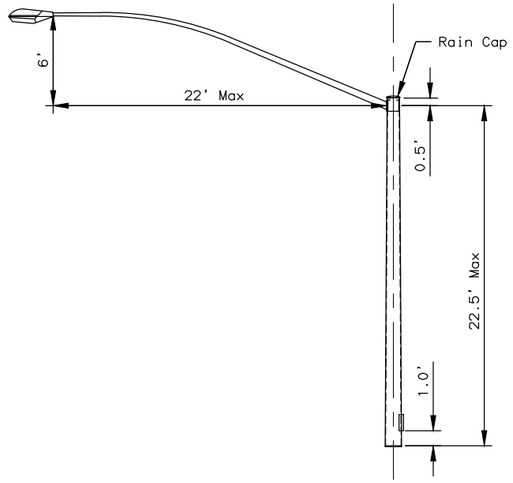


SINGLE LUMINAIRE

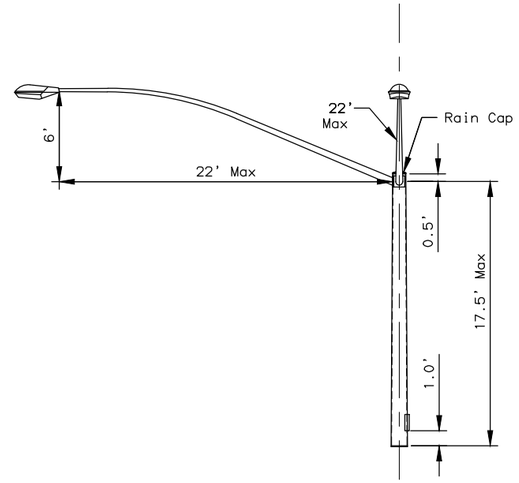


DOUBLE LUMINAIRE

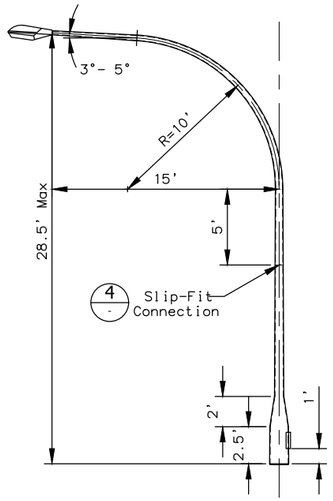


DAVIT LUMINAIRE

## UPPER SECTION OPTIONS

NTS

| MATERIAL REQUIREMENTS | |
|---|---|
| MATERIAL QUALITY GUIDANCE | |
| Tube Material | A572, A595 GR A, or A1011 (50ksi min) |
| Post Top Connecting Plates | AASHTO M270 F3 |
| Concentric Reducer | A572 OR A595 GR A |
| Connection Tube | A572 OR A595 GR A |
| Luminaire, Arm, and Mounting | See Lighting Standard Details |
| Upper Section Connection Bolts | ASTM F1325, Grade A325 |
| Upper Section Connection Bolts | ASTM F436 |
| Slip Fit Through Bolt | ASTM F1325, Grade A325 |
| Finish | AASHTO M111 & M232 |
| | |
| STANDARD UPPER SECTION | |
| Fixed End Diameter | 15.99" O.D. |
| Taper | 0.14"/ft |
| Connecting Plate Thickness | 1" |
| Post Top Connection Bolts | 1" 8 UNC x 2.75" |
| Tube Thickness | 7 GA |
| | |
| HANDHOLE DIMENSIONS | |
| Upper Section Handhole | 7" x 12.89" |
| Reinforcing Material | 0.5" x 3" |
| Handhole Cover | 0.125" |
| | |
| SINGLE LUMINAIRE | |
| Design Length | 22.5' |
| Section Shape | Round |
| | |
| DOUBLE LUMINAIRE | |
| Design Length | 17.5' |
| Section Shape | Round |
| | |
| DAVIT LUMINAIRE | |
| Design Length | 28.5' |
| Section Shape | Round |
| Taper | 0.14'/ft |
| Free End Diameter | 2.375" O.D. |
| Connection Tube | 7 GA |
| Concentric Reducer | 7 GA |
| Davit Arm Connection Tube | 7 GA |
| Davit Arm | 7 GA |

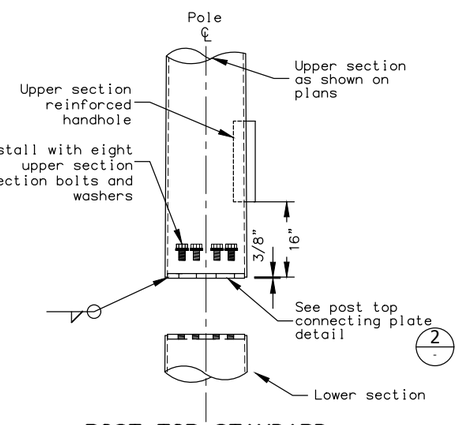


1 POST TOP STANDARD UPPER SECTION BASE DETAIL

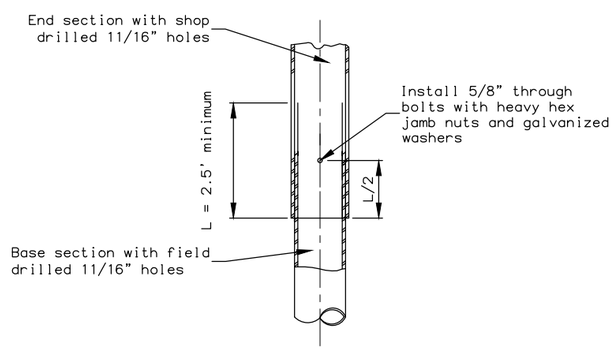


4 MASTARM SLIP SPLICE ELEVATION DETAIL

NTS

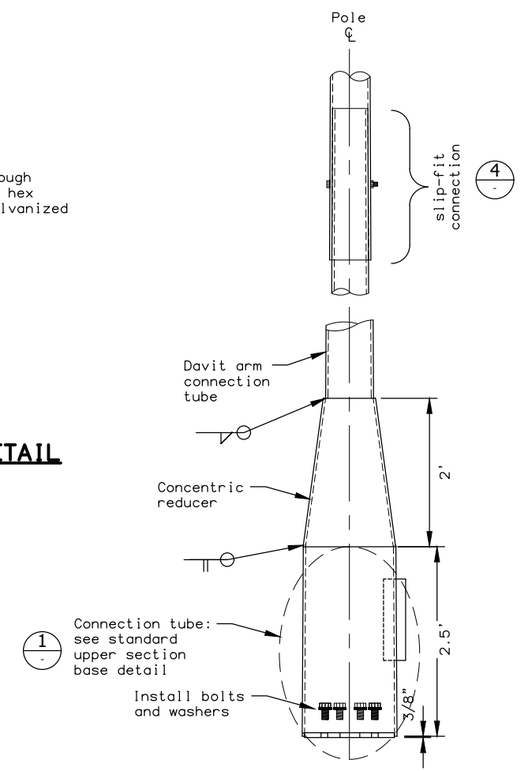


3 DAVIT UPPER SECTION BASE DETAIL

NTS

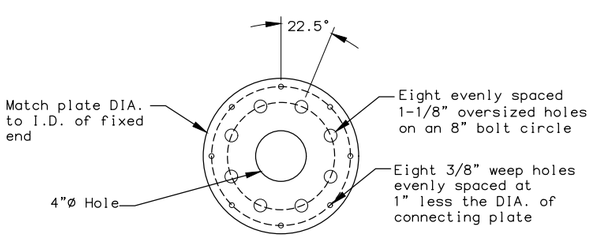


2 POST TOP CONNECTING PLATE DETAIL

State of Alaska DOT&PF
ALASKA STANDARD PLAN

SIGNAL POLE
WITH 55' TO 65' MASTARM
UPPER SECTION

Adopted as an Alaska Standard Plan by: Carolyn Morehouse
Carolyn Morehouse, P.E.
Chief Engineer

Adoption Date: 07/17/2020

Last Code and Stds. Review
By: Date:

Next Code and Standards Review date: 07/17/2030

| POLE DESIGN LOADING | | | | | | |
|---|---|---|---|---|---|---|
| Load Component | Height (ft.) | Weight (lbs.) | Ice Area (sq. ft.) | Wind Area (Face) (sq. ft.) | Wind Area (Side) (sq. ft.) | Fatigue Area (Bottom) (sq. ft) |
| 1 = Luminaire | 0.5 | 25 | 8.1 | 0.6 | 1.0 | 2.5 |
| 2 = Signal | 4.2 | 54 | 20.2 | 6.9 | 4.8 | 1.4 |
| 3 = Signal | 5.3 | 70 | 25.8 | 8.9 | 6.4 | 1.4 |
| 4 = Ped Head | 1.4 | 22 | 7.8 | 2.2 | 0.9 | 0.9 |
| 5 = Sign | 2.5 | 120 | 30.0 | 30.0 | 0.8 | 4.0 |

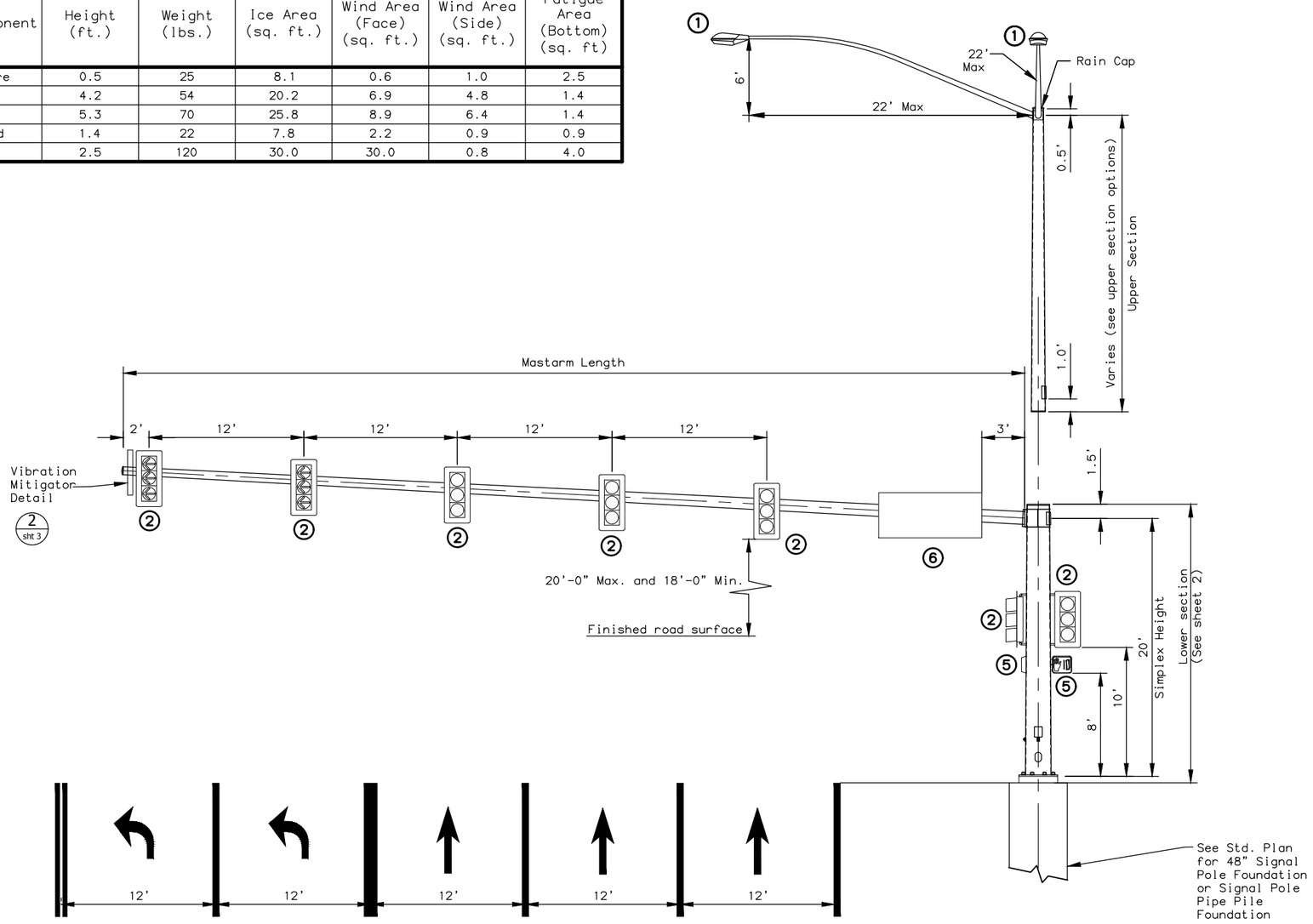


**ELEVATION VIEW**

NTS

| MASTARM DATA | | | | | | | | | |
|---|---|---|---|---|---|---|---|---|---|
| MASTARM | | MASTARM END SECTION | | | MASTARM BASE SECTION | | | MASTARM BASEPLATE | |
| Length (ft.) | Maximum Allowed Galloping Deflection (in.) | Free End Diameter (in.) | Length (ft.) | Tube Thickness (in.) | Length (ft.) | Fixed End Diameter* (in.) | Tube Thickness (in.) | Plate Opening Diameter (in.) | Plate Thickness (in.) |
| 70 | 12.0 | 7.5 | 40.0 | 0.1793 | 32.9 | 16.7 | 0.375 | 4.0 | 3.0 |
| 75 | 12.0 | 7.5 | 40.0 | 0.1793 | 37.9 | 17.4 | 0.375 | 4.0 | 3.0 |

*Fixed end diameter measured at connection to Baseplate

## NOTES:

1. Provide pole assemblies designed, manufactured and installed according to: 2013 AASHTO Standard Specifications for Structural Supports for Highway Signs, Luminaires and Traffic Signals with 2013 Errata and 2015 Interim Revision, the latest edition of the Alaska Standard Specifications for Highway Construction including standard modifications, and special provisions. Design structures for a 50-year Design Life, Fatigue Category I with ice loading. Fatigue design shall include Natural Wind Gust, Truck-Induced Gust, and an approved vibration mitigating device in lieu of Galloping Effect.

2. Provide poles to accommodate the maximum length shown in the mastarm data with the given loads, dimensions, and material requirements.

3. This drawing shows loads (signs and signals) to be used by manufacturers when designing poles. It does not show actual loading of poles/mastarms on individual projects. This pole/mastarm design may be used without further analysis if the following conditions are met:
   - The guide sign (load #5) is attached to the mastarm base section and,
   - Not more than 5 traffic signals and/or signs are attached to the mastarm.

   If these conditions are not met, this standard pole/mastarm design may only be used if design computations are submitted that demonstrate conformance to design criteria (note 1) using actual loads. Devices with less than 1 square foot of projected area may be added to the mastarm without causing a need for additional design computations.

4. The manufacturer is to determine weld sizes. All welds and testing shall conform to the latest edition of the structural welding code AWS D1.1. Provide visual testing (VT) of 100% of all welds. Provide magnetic particle testing (MT) of 100% of all fillet welds. Provide radiographic (RT) or ultrasonic testing (UT) of 100% of all complete joint penetration welds and a random 25% of all partial joint penetration longitudinal seam welds.

5. Fabricate pole tubes and mastarm tubes from no more than 2 pieces of steel. When using 2 pieces, place the longitudinal welded seams directly opposite one another. Transverse weld seams prohibited.

6. Fabricate luminaire arms and connections according to the latest lighting standard detail.

7. Provide permanent tags on all pole sections per section 740 table 740-1 of the specifications. Provide a weather proof rain cap on all exposed sections of the structure.

8. The Department will reject damaged or defective poles for any of the following; variances from approved shop drawings, variances from material requirements, sections more than 2-percent out of round, flanged mounting surfaces with flatness variation greater than 0.030", sections bowed more than 1-inch throughout the length of the pole, mastarm, or segment, and damaged or dented finishes.

9. To allow for wiring, field drill a 1" maximum diameter hole at each traffic signal head location. Orient the hole on the horizontal axis of mastarms.

10. Install pole raked outward from plumb position in the direction opposite the mastarm such that the side of the pole opposite the mastarm is vertical.

11. Clean and remove dirt, burrs, mill scale, and excess galvanization on all faying surfaces and threaded parts before assembly. Lubricate the threads of all bolts and nuts with lubricant containing a visible dye. Tighten all bolts according to section 504 of the specifications.

State of Alaska DOT&PF
ALASKA STANDARD PLAN

SIGNAL POLE
WITH 70' TO 75' MASTARM
LOADING & NOTES

Adopted as an Alaska Standard Plan by: Carolyn Morehouse
Carolyn Morehouse, P.E.
Chief Engineer

Adoption Date: 07/17/2020

Last Code and Stds. Review
By: Date:

Next Code and Standards Review date: 07/17/2030

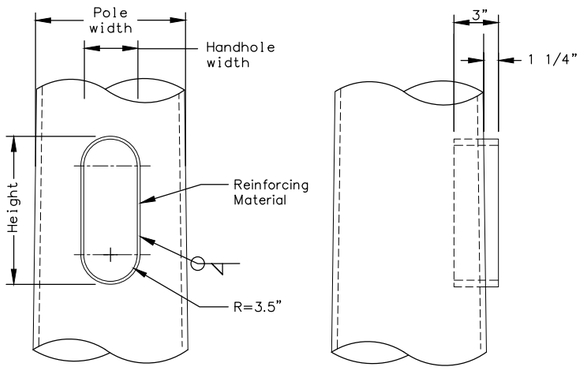


FRONT VIEW SIDE VIEW

## REINFORCED HANDHOLE DETAILS

1 (See material requirements table for dimensions)

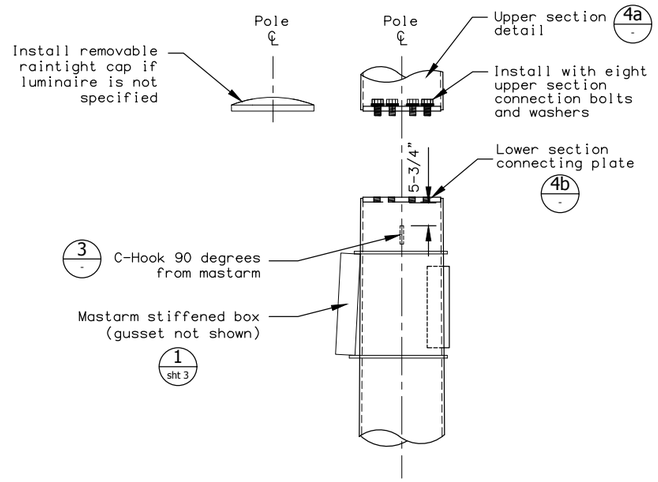


## 4 LOWER SECTION POST TOP DETAIL

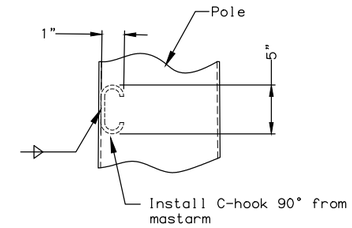


## 3 C-HOOK DETAIL

(Typical throughout lower section)
NTS

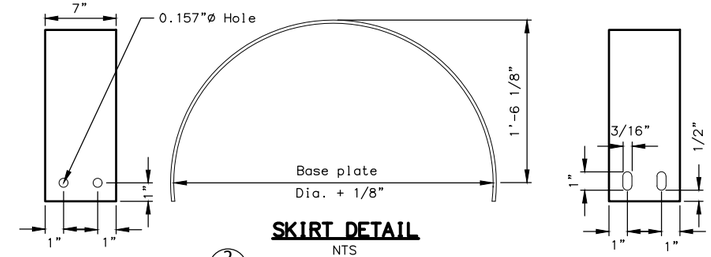


## SKIRT DETAIL

NTS
2 (Two required per pole)

| MATERIAL REQUIREMENTS | |
|---|---|
| MATERIAL QUALITY GUIDANCE | |
| Steel ≤1/2" Thick | ASTM A572 OR A595 |
| Steel > 1/2" Thick | AASHTO M270 F3 (50ksi) |
| Finish | AASHTO M111 & M232 |
| Mastarm Bolts | AASHTO M164 |
| Mastarm Washers | ASTM F436 |
| Anchor Rods | See T-53.01 |
| | |
| POLE (LOWER SECTION) | |
| Design Length | 21.50' |
| Section Shape | Round |
| Simplex Height | 20.0' |
| Taper | 0.14'/ft |
| Baseplate Bolt Circle Diameter | 30.0" |
| Diameter Concentric Opening | 12.0" |
| Tube Thickness | 0.375" |
| Fixed End Diameter | 21.0" OD |
| Base Plate | 36" O.D. x 4" |
| Backing Ring | 0.25" x 3" |
| | |
| HANDHOLE DIMENSIONS | |
| Outside Dimensions | 7" x 12.89" |
| Reinforcing Material | 0.5" x 3" |
| Handhole Cover | 0.125" |
| | |
| MISCELLANEOUS | |
| Post Top Connecting Plates | 1.00" |
| Pole Skirt | 0.125" |
| C-Hook | 0.50" |

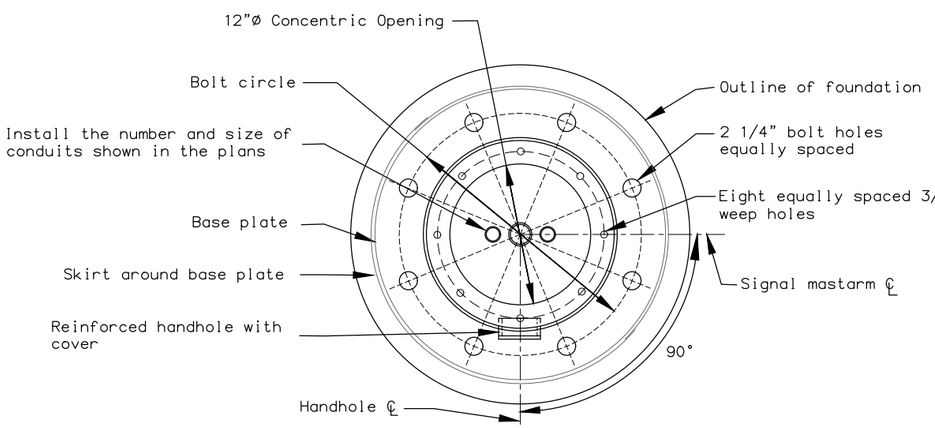


PLAN VIEW

(Shown without anchor bolts and nuts for clarity)

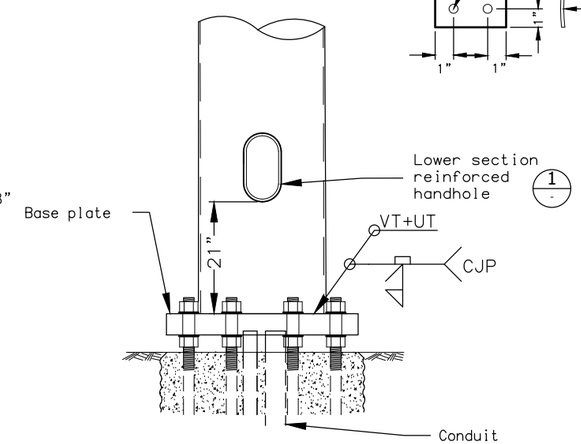


FRONT VIEW

(Skirt omitted for clarity) 2

## 5 POLE BASE DETAIL

NTS

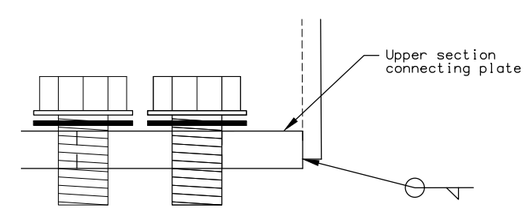


## 4a POST TOP UPPER SECTION CONNECTING PLATE

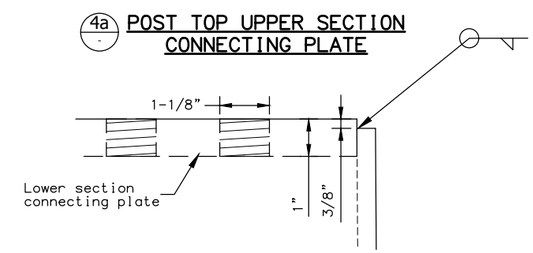


## 4b POST TOP LOWER SECTION CONNECTING PLATE

State of Alaska DOT&PF
ALASKA STANDARD PLAN

SIGNAL POLE
WITH 70' TO 75' MASTARM
LOWER SECTION

Adopted as an Alaska Standard Plan by: Carolyn Morehouse
Carolyn Morehouse, P.E.
Chief Engineer

Adoption Date: 07/17/2020

Last Code and Stds. Review
By: Date:

Next Code and Standards Review date:07/17/2030

T-57.10

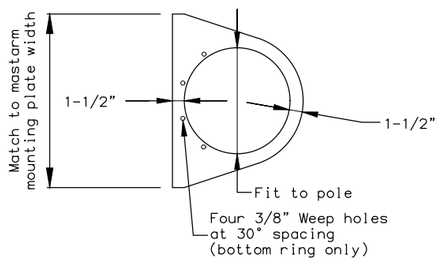


RING DETAIL

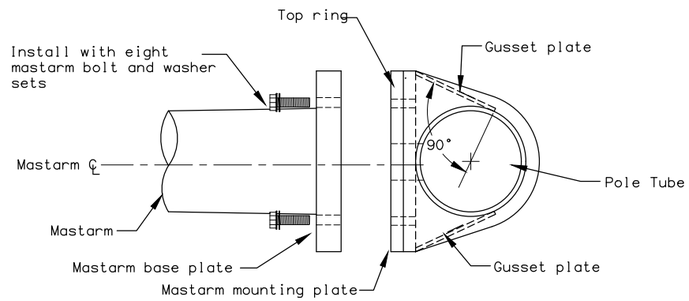


SECTION B-B

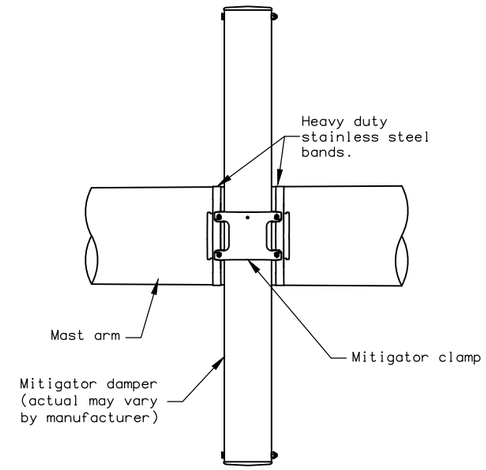


2

VIBRATION MITIGATOR CONNECTION DETAIL

| MATERIAL REQUIREMENTS | |
|---|---|
| MATERIAL QUALITY GUIDANCE | |
| Steel ≤ 1/2" Thick | ASTM A572 OR A595 |
| Steel > 1/2" Thick | AASHTO M270 F3 (50ksi) |
| Finish | AASHTO M111 & M232 |
| Mastarm Bolts | AASHTO M164 |
| Mastarm Washers | ASTM F436 |
| Anchor Rods | See T-53.00 |
| | |
| RING-STIFFENED BOX | |
| Mastarm Mounting Plate | 26" x 26" x 3" |
| Plate Opening Diameter | Mastarm Data (See Sheet 1) |
| Top Ring Thickness | 0.375" |
| Bottom Ring Thickness | 0.375" |
| Gusset Plate Thickness | 0.375" |
| | |
| MASTARM HANDHOLE | |
| Outside Dimensions | 7" x 12.89" |
| Reinforcing Material | 0.5" x 3" |
| Handhold Cover | 0.125" |
| | |
| MASTARM | |
| Design Length | 75' |
| Section Shape | Round |
| Plate Opening Diameter | Mastarm Data (See Sheet 1) |
| Mastarm Tube Thickness | Mastarm Data (See Sheet 1) |
| Fixed End Diameter | Mastarm Data (See Sheet 1) |
| Mastarm Rise | 4.0 degrees |
| Mastarm Baseplate | 26" x 26" x 3" |
| Backing Ring | 0.25" x 3" |
| Mastarm Bolts | 1.5" 6 UNC x 5.5" |

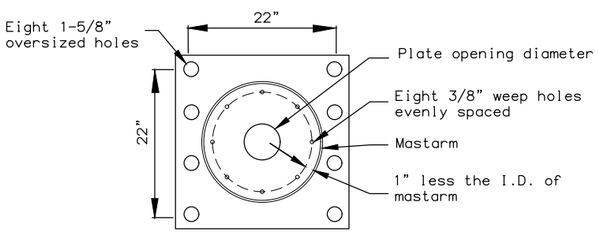


MASTARM BASE PLATE

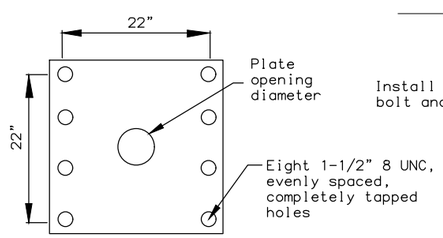


MASTARM MOUNTING PLATE

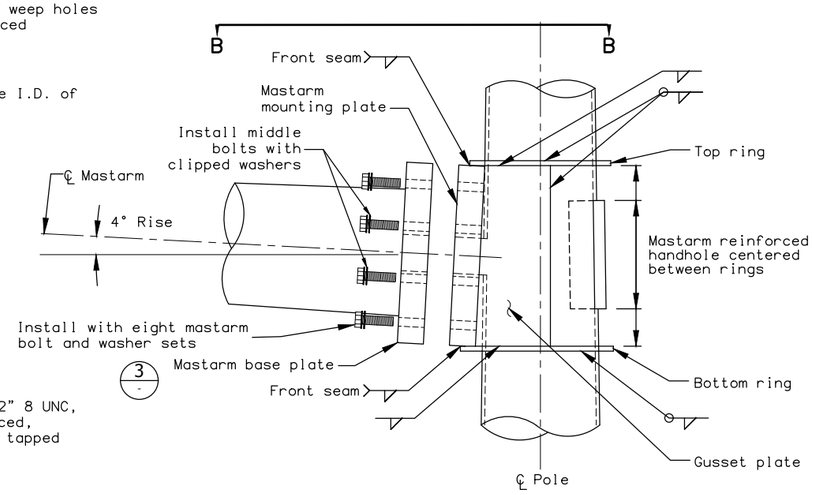


3

SIDE VIEW

1 RING - STIFFENED BOX DETAILS

NTS

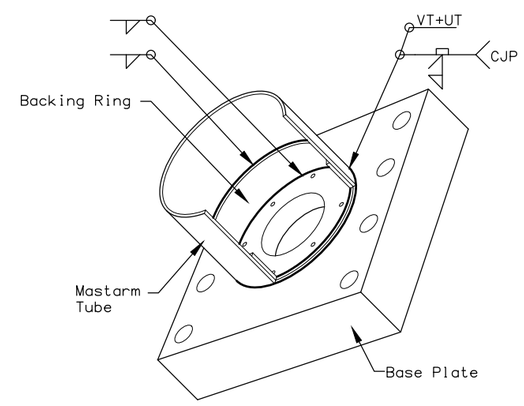


ISO VIEW

3

TUBE TO TRANSVERSE PLATE WELD DETAIL

(Shown with tube and backing ring cutout for clairity)

State of Alaska DOT&PF
ALASKA STANDARD PLAN

SIGNAL POLE
WITH 70' TO 75' MASTARM
MASTARM & STIFFENED BOX

Adopted as an Alaska Standard Plan by: Carolyn Morehouse
Carolyn Morehouse, P.E.
Chief Engineer

Adoption Date: 07/17/2020

Last Code and Stds. Review
By: Date:

Next Code and Standards Review date: 07/17/2030

T-57.10

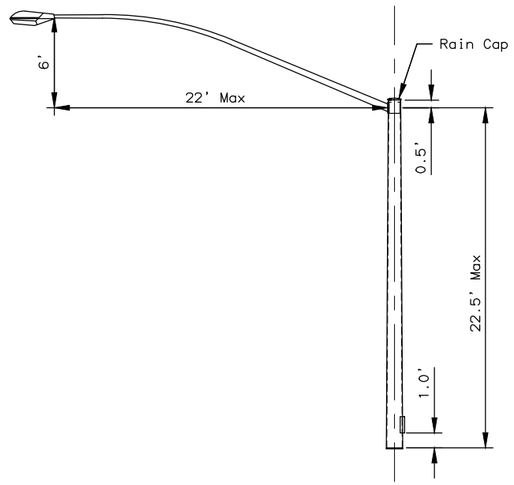


SINGLE LUMINAIRE

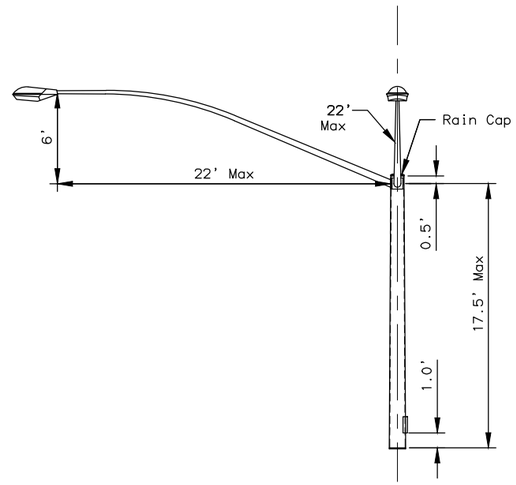


DOUBLE LUMINAIRE

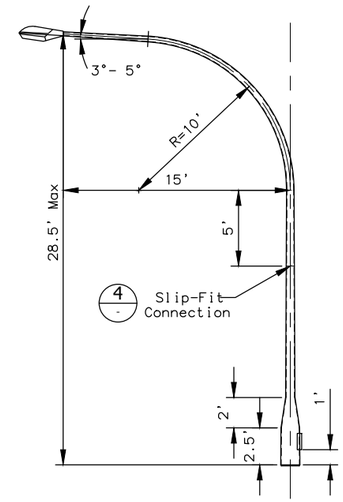


DAVIT LUMINAIRE

## UPPER SECTION OPTIONS

NTS

| MATERIAL REQUIREMENTS | |
|---|---|
| MATERIAL QUALITY GUIDANCE | |
| Tube Material | A572, A595 GR A, or A1011 (50ksi min) |
| Post Top Connecting Plates | AASHTO M270 F3 |
| Concentric Reducer | A572 OR A595 GR A |
| Connection Tube | A572 OR A595 GR A |
| Luminaire, Arm, and Mounting | See Lighting Standard Details |
| Upper Section Connection Bolts | AASHTO M164 |
| Upper Sectoin Connection Bolts | ASTM F436 |
| Slip Fit Through Bolt | AASHTO M164 |
| Finish | AASHTO M111 & M232 |
| | |
| STANDARD UPPER SECTION | |
| Fixed End Diameter | 17.99" O.D. |
| Taper | 0.14"/ft |
| Connecting Plate Thickness | 1" |
| Post Top Connection Bolts | 1" 8 UNC x 2.75" |
| Tube Thickness | 7 GA |
| | |
| HANDHOLE DIMENSIONS | |
| Upper Section Handhole | 7" x 12.89" |
| Reinforcing Material | 0.5" x 3" |
| Handhole Cover | 0.125" |
| | |
| SINGLE LUMINAIRE | |
| Design Length | 22.5' |
| Section Shape | Round |
| | |
| DOUBLE LUMINAIRE | |
| Design Length | 17.5' |
| Section Shape | Round |
| | |
| DAVIT LUMINAIRE | |
| Design Length | 28.5' |
| Section Shape | Round |
| Taper | 0.14'/ft |
| Free End Diameter | 2.375" O.D. |
| Connection Tube | 7 GA |
| Concentric Reducer | 7 GA |
| Davit Arm Connection Tube | 7 GA |
| Davit Arm | 7 GA |

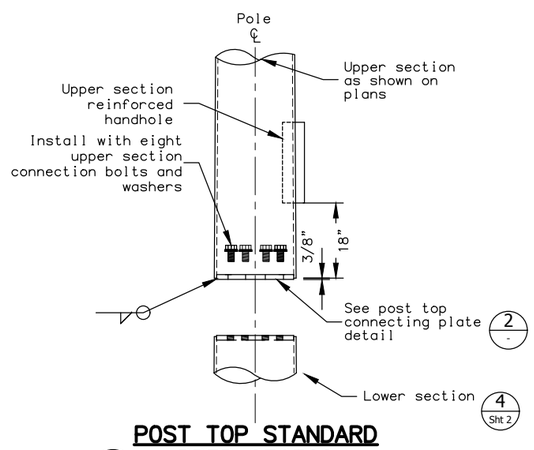


1 POST TOP STANDARD UPPER SECTION BASE DETAIL

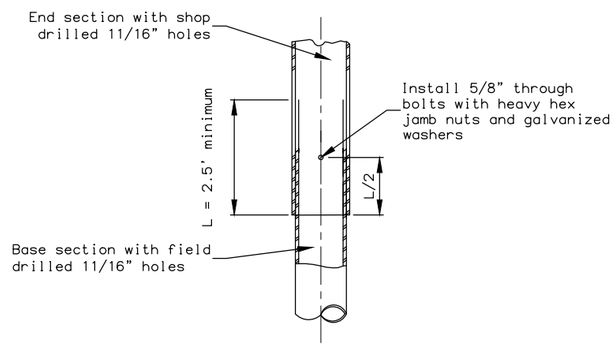


4 MASTARM SLIP SPLICE ELEVATION DETAIL

NTS

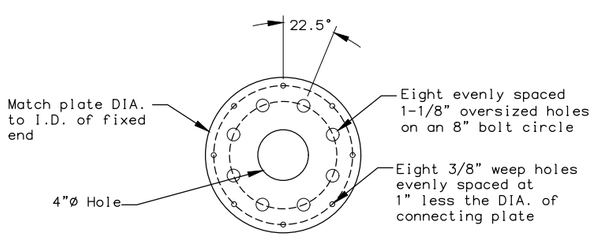


2 POST TOP CONNECTING PLATE DETAIL

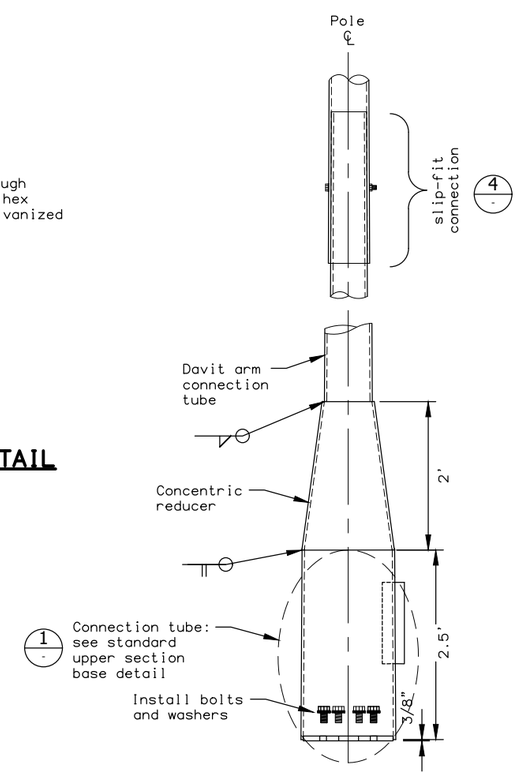


3 DAVIT UPPER SECTION BASE DETAIL

NTS

State of Alaska DOT&PF
ALASKA STANDARD PLAN

SIGNAL POLE
WITH 70' TO 75' MASTARM
UPPER SECTION

Adopted as an Alaska Standard Plan by: Carolyn Morehouse
Carolyn Morehouse, P.E.
Chief Engineer

Adoption Date: 07/17/2020

Last Code and Stds. Review
By: Date:

Next Code and Standards Review date: 07/17/2030

| THRUST BLOCK MINIMUM SIZE TABLE | | | | | | |
|---|---|---|---|---|---|---|
| For Bends Greater Than 45°, Tee Branches & Crosses | | | | | | |
| Pipe Diam. (In.) | Water Pressure in Pipe (P.S.I.) | | | | | |
| | 50 | | 150 | | 250 | |
| | Bearing Area (Sq. Ft.) | Concrete Volume (Cu. Ft.) | Bearing Area (Sq. Ft.) | Concrete Volume (Cu. Ft.) | Bearing Area (Sq. Ft.) | Concrete Volume (Cu. Ft.) |
| 2 | 0.5 | 0.5 | 0.8 | 1.0 | 1.0 | 1.3 |
| 3 | 0.6 | 0.8 | 1.0 | 1.3 | 1.1 | 1.5 |
| 4 | 0.8 | 1.0 | 1.6 | 3.1 | 1.5 | 3.0 |
| 6 | 1.0 | 1.3 | 1.9 | 4.0 | 3.2 | 7.0 |
| 8 | 1.1 | 1.5 | 3.2 | 7.0 | 5.4 | 11.0 |
| 10 | 1.7 | 3.2 | 4.9 | 10.0 | 8.3 | 19.0 |
| 12 | 2.4 | 5.2 | 7.1 | 17.0 | 11.8 | 24.3 |
| 14 | 3.2 | 7.0 | 9.8 | 21.0 | 16.1 | 32.0 |
| 16 | 4.1 | 8.0 | 12.3 | 25.0 | 20.5 | 40.0 |
| 18 | 5.4 | 11.0 | 16.2 | 32.0 | 27.1 | 50.0 |
| 20 | 6.8 | 15.0 | 20.6 | 40.0 | 34.4 | 70.0 |
| 24 | 8.2 | 19.0 | 25.3 | 50.0 | 42.0 | 80.0 |
| For Bends 45° or Less | | | | | | |
| 2 | 0.5 | 0.5 | 0.5 | 0.5 | 0.6 | 0.8 |
| 3 | 0.5 | 0.5 | 0.7 | 0.9 | 0.8 | 1.0 |
| 4 | 0.5 | 0.5 | 0.9 | 1.1 | 1.0 | 1.5 |
| 6 | 0.6 | 0.8 | 1.2 | 2.0 | 1.7 | 3.2 |
| 8 | 0.8 | 1.0 | 1.8 | 3.6 | 2.9 | 6.0 |
| 10 | 1.0 | 1.3 | 2.7 | 5.8 | 4.5 | 9.0 |
| 12 | 1.3 | 2.5 | 3.8 | 7.5 | 6.4 | 14.0 |
| 14 | 1.7 | 3.2 | 5.2 | 11.0 | 8.6 | 19.0 |
| 16 | 2.2 | 4.5 | 6.7 | 15.0 | 11.2 | 24.0 |
| 18 | 2.8 | 5.9 | 8.5 | 19.0 | 14.1 | 30.0 |
| 20 | 3.5 | 7.0 | 10.5 | 22.2 | 17.5 | 35.0 |
| 24 | 4.2 | 8.0 | 12.8 | 26.0 | 21.5 | 40.0 |

| VALVES REQUIRING ANCHORAGE | |
|---|---|
| WORKING PRESSURE (P.S.I.) | VALVES REQUIRING ANCHORAGE |
| 50 - 100 | 12 Inch and up |
| 101 - 150 | 8 Inch and up |
| 151 - 200 | All Sizes |

| THRUST AT VERTICAL BEND PER DEGREE DEFLECTION AT 100 P.S.I. WATER PRESSURE | | | |
|---|---|---|---|
| PIPE SIZE | THRUST (LB.) | PIPE SIZE | THRUST (LB.) |
| 4" | 35 | 10" | 197 |
| 6" | 72 | 12" | 278 |
| 8" | 122 | 14" | 377 |
| | | 16" | 486 |

## GENERAL NOTES:

1. Thrust blocks are to be concrete poured in place between the fitting and undisturbed trench wall.
2. Concrete shall be kept centered behind bell of fitting and not obstructing pipe joints.
3. Thrust blocks are required whenever pipe-line changes direction, changes size, dead ends, or develops thrust at valves.
4. Material, behind the thrust blocks, deemed unsuitable by the engineer shall be removed and replaced as directed by the engineer.
5. In impervious soils, a hole shall be dug beneath the hydrant thrust block tp a minimum volume of 7 cubic feet. The hole shall be filled with porous backfill material.
6. Refer to AWWA C600-64 Section II for placement of hydrant
7. Orient hydrant with nozzles facing street.

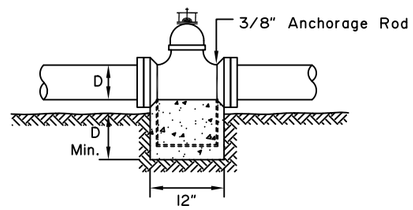


ANCHORAGE OF VALVES

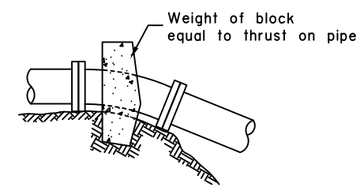


VERTICAL BENDS

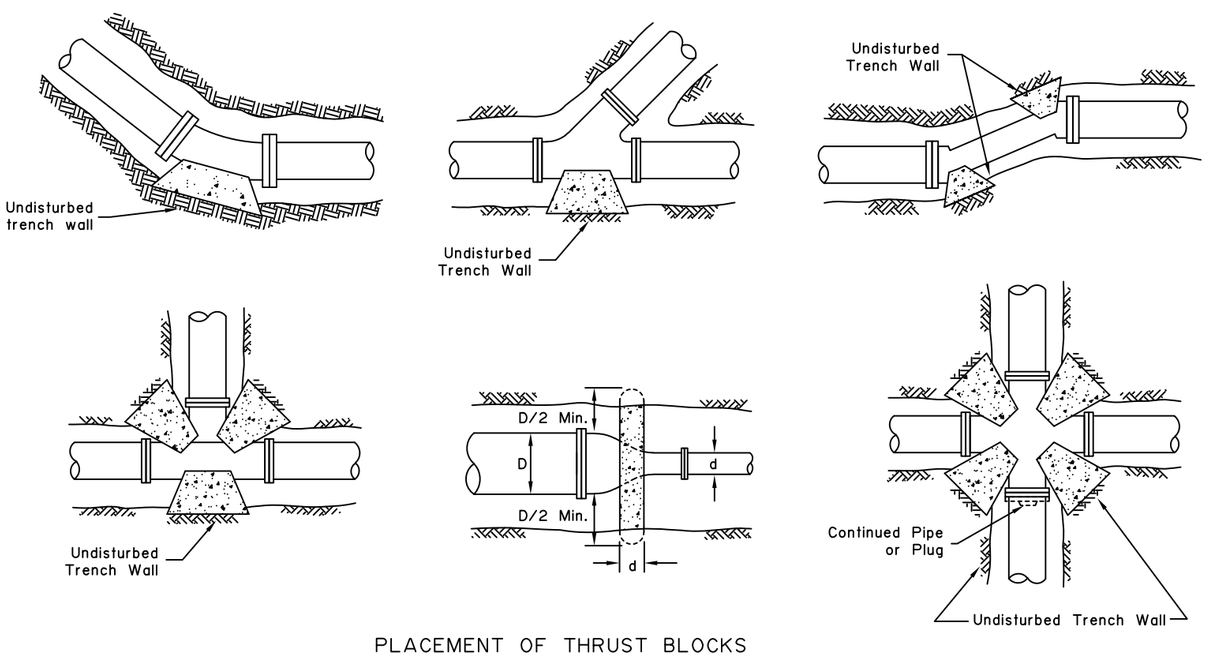


PLACEMENT OF THRUST BLOCKS

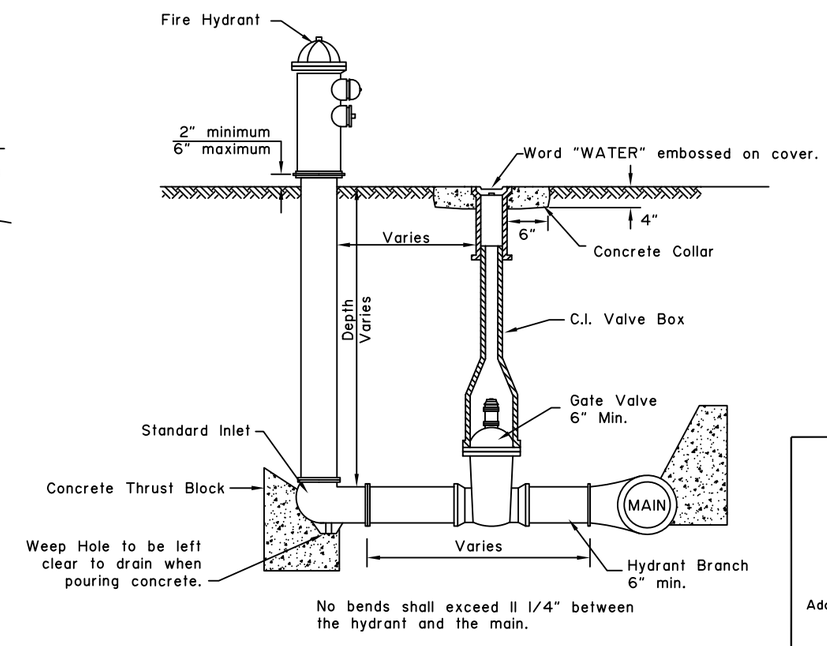


STANDARD HYDRANT

State of Alaska DOT&PF
ALASKA STANDARD PLAN

**THRUST BLOCKS**

Adopted as an Alaska Standard Plan by: Kenneth J. Fisher, P.E.
Chief Engineer

Adoption Date: 02/08/2019

Last Code and Stds. Review
By: Date:

Next Code and Standards Review date: 02/08/2029