STATE	PROJECT DESIGNATION	YEAR	SHEET NO.	TOTAL SHEETS
ALASKA	SFHWY00072/0902043	2019	N1	TtlShts

PROFILE GRADE DATA

No Scale

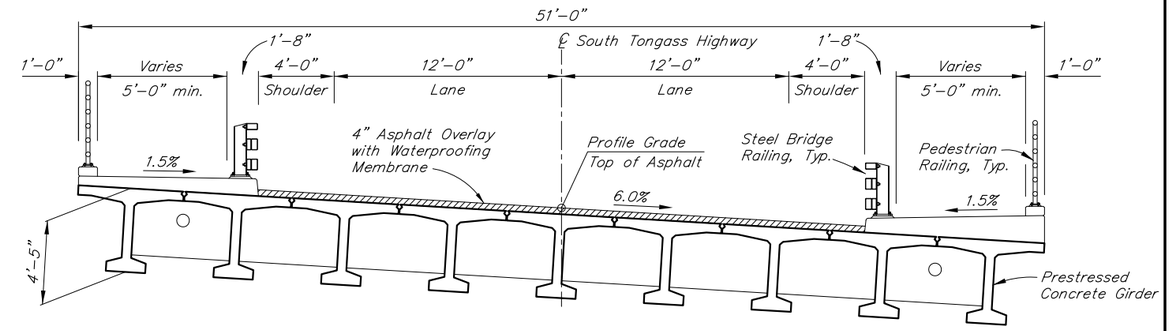

TYPICAL SECTION

12 0 4 8
In. Feet

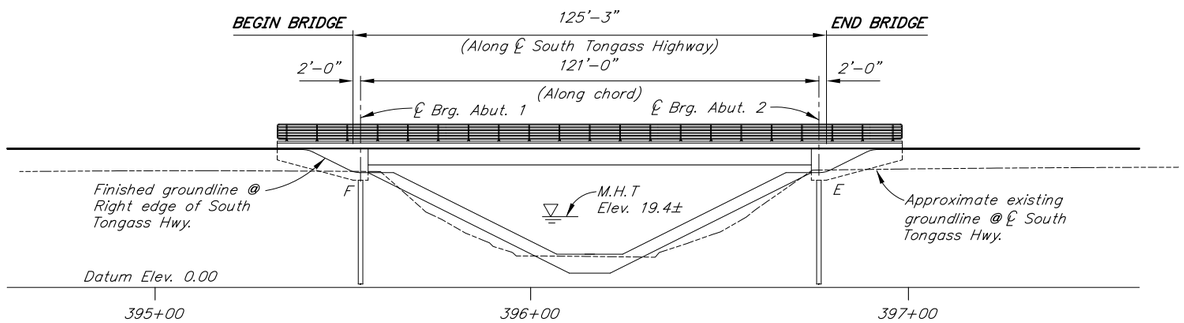

ELEVATION

10 0 20 40
Feet

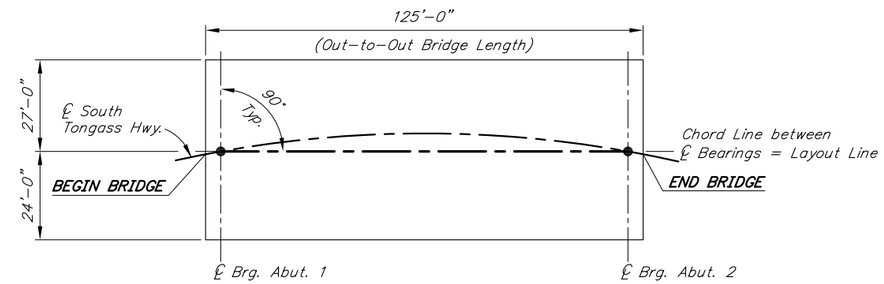

LAYOUT LINE

No Scale

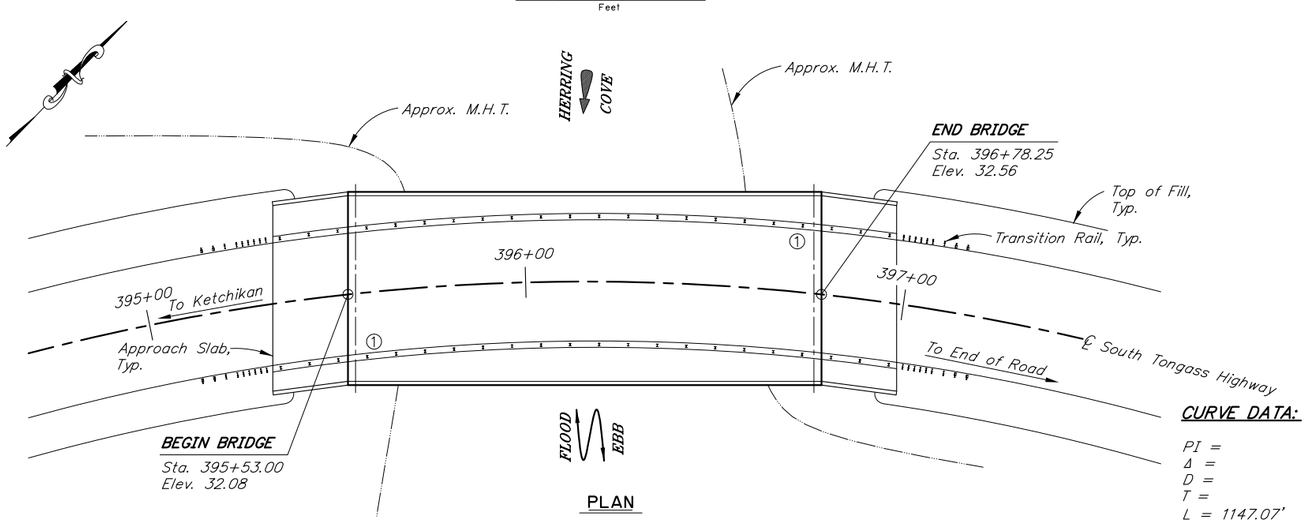

PLAN

10 0 20 40
Feet

CURVE DATA:

PI =
Δ =
D =
T =
L = 1147.07'
R = 578.74'
S = 6.00%

DRAWING INDEX

TITLE	DWG. NO.
GENERAL LAYOUT	1
SITE PLAN	2
RIPRAP LAYOUT	3
RIPRAP DETAILS	4
ABUTMENT 1	5
ABUTMENT 2	6
ABUTMENT DETAILS	7
WINGWALLS	8
FRAMING PLAN AND TYPICAL SECTION	9
GIRDERS	10
GIRDER DETAILS	11
SIDEWALK DETAILS	12
APPROACH SLABS	13
PEDESTRIAN RAILING	14
STEEL BRIDGE RAILING	15
THRIE BEAM TRANSITION RAIL	16
LOG OF TEST BORINGS	17-

PRELIMINARY PLAN

DRAFT

NOTES

① Approximate location of Bridge Number Plate.

DESIGNED BY: Elmer Marx	CHECKED: Checker	LAYOUT BY: Elmer Marx	CHECKED BY: Checker
DRAWN BY: Sam Sollie	CHECKED: Elmer Marx	SPECIFICATIONS BY: Elmer Marx	P S & E COMPARED: Checker
QUANTITIES BY: Elmer Marx	CHECKED: Checker	APPROVAL RECOMMENDED BY: Rich Pratt	

STATE OF ALASKA
DEPARTMENT OF TRANSPORTATION AND PUBLIC FACILITIES
BRIDGE SECTION
3132 Channel Drive
Juneau, Alaska 99801
907-465-2975

HERRING COVE BRIDGE

SOUTH TONGASS HIGHWAY

GENERAL LAYOUT

BRIDGE NO. 253

DWG. NO. 1

R:\cad\253\253-GENERAL LAYOUT Wed, Oct/03/18 01:27pm

STATE	PROJECT DESIGNATION	YEAR	SHEET NO.	TOTAL SHEETS
ALASKA	SFHWY00072/0902043	2019	N2	TtlShts

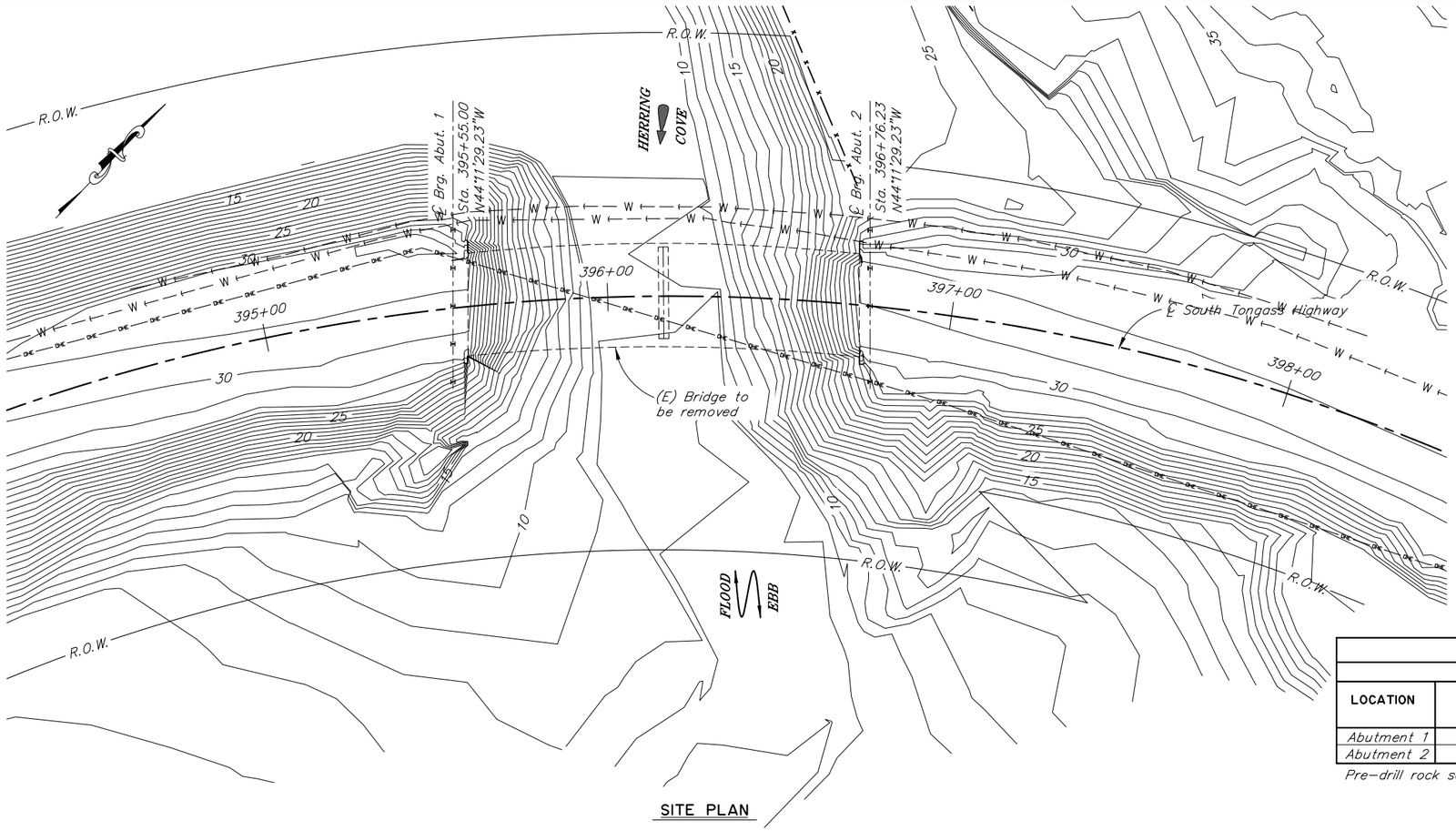

SITE PLAN

10 0 20 40
Feet

GENERAL NOTES

DESIGN:..... AASHTO LRFD Bridge Design Specifications, 2017 Edition, with latest interim specifications.

Seismic design per AASHTO Guide Specifications for LRFD Seismic Bridge Design, 2011 with latest interim revisions.

LIVE LOAD:..... HL-93

DEAD LOAD:..... Includes 50 psf for all wearing surfaces.

SEISMIC PARAMETERS:..... PGA = 0.09
Ss = 0.18
S1 = 0.14
Site Class = D
Liquefaction Potential = Moderate
AASHTO 7% probability of exceedance in 75 years.

REINFORCEMENT:..... ASTM A706, Grade 60, Fy = 60,000 psi
ASTM A970 Headed bars, Class HA.
Space reinforcement evenly unless otherwise noted.

PRESTRESSED CONCRETE:..... See "GIRDERS" Dwg.

CONCRETE:..... Class A Concrete unless otherwise noted, f'c = 4000 psi

STRUCTURAL STEEL:..... ASTM A709, Grade 36T3, Fy = 36,000 psi
Galvanize structural steel in accordance with AASHTO M111 unless shown otherwise.

STRUCTURAL STEEL PILING:..... ASTM A709, GR50T3, Fy = 50,000 psi.
Pile Tip reinforcing is required.
Embed piles into rock sockets

PILE DATA TABLE

		DRIVING CRITERIA			DESIGN DATA		
LOCATION	PILE TYPE	MINIMUM PENETRATION (ft)	ESTIMATED PILE TIP ELEVATION (ft)	DRIVING RESISTANCE (K)	STRENGTH I FACTORED LOAD (K)	NOMINAL RESISTANCE (K)	RESISTANCE FACTOR, Φ
Abutment 1	HP 14x117						0.65
Abutment 2	HP 14x117						0.65

Pre-drill rock socket to avoid waterline

ESTIMATE OF QUANTITIES

ITEM NO.	ITEM	PAY UNIT	ESTIMATING UNIT	SUBST.	SUPERST.	TOTAL QUANTITY
202.0023.0000	Removal of Existing Bridge No. 253	LS	LS			
205.0006.0000	Structural Fill	CY	CY			
501.0001.0000	Class A Concrete	LS	CY			
501.0007.0000	Precast Concrete Member (123'-0" Decked Bulb-Tee)	EA	EA			
503.0001.0000	Reinforcing Steel	LS	LBS			
503.0002.0000	Epoxy-Coated Reinforcing Steel	LS	LBS			
505.0005.0000	Furnish Structural Steel Piles (HP 14x117)	LF	LF			
505.0006.0000	Drive Structural Steel Piles (HP 14x117)	EA	EA			
507.0001.0000	Steel Bridge Railing	LF	LF			
507.0002.0000	Pedestrian Railing	LF	LF			
508.2000.0000	Waterproofing Membrane (Spray-on)	LS	SF			
520.0001.0000	Temporary Crossings	LS	LS			
606.0016.0000	Transition Rail	EA	EA			
611.0002.0001	Riprap, Class II	CY	CY			
631.0001.0000	Geotextile, Erosion Control, Class I	SY	SY			

Item numbers are for reference only. Quantities shown are not necessarily the pay quantities nor the total quantity of the particular item.

DRAFT

ABBREVIATIONS:

℄	= centerline	E	= expansion	N/A	= not applicable
ℙ	= plate	(E)	= existing	n.f.	= near face
&	= and	EA	= each	No.	= number
@	= at	Elev.	= elevation	o.c.	= on center
ø	= diameter	e.f.	= each face	O.H.W.	= ordinary high water
±	= approximate	e.w.	= each way	—— OHE ——	= overhead electrical cable
AASHTO	= American Association of State Highway and Transportation Officials	Ext.	= exterior	pcf	= pounds per cubic foot
		F	= fixed	psf	= pounds per square foot
		f.f.	= front/air face	psi	= pounds per square inch
ASTM	= American Society for Testing and Materials	f'c	= specified concrete compressive strength	R.O.W.	= right of way
				Rt.	= right
About.	= abutment	Fy	= yield stress	Rd.	= road
Approx.	= approximate	Glav.	= galvanize	spc.	= space, spaces
b.f.	= back/dirt face	Hwy.	= highway	Sta.	= station
bot.	= bottom	Int.	= interior	Std.	= standard
Br.	= bridge	Jt.	= joint	SF	= square feet
btwn.	= between	ksf	= 1000 pounds per square foot	Symm.	= symmetric
Brg.	= bearings	ksi	= 1000 pounds per square inch	Typ.	= typical
C.I.P.	= cast in place	LB	= pound	UT	= ultrasonic testing
C.G.	= center of gravity	LF	= linear foot	VPC	= point of vertical curve
CJP	= complete joint penetration	LS	= lump sum	VPI	= point of vertical intersection
Clr.	= clear, clearance	Lt.	= left	VPT	= point of vertical tangent
CY	= cubic yard	m	= multiple presence factor	— W ——	= underground waterline
dia.	= diameter	max.	= maximum	w/	= with
Dwg.	= drawing	min.	= minimum		

DESIGNED BY: Elmer Marx	CHECKED: Checker	FOUNDATIONS REVIEWED BY: Engineer	STATE OF ALASKA DEPARTMENT OF TRANSPORTATION AND PUBLIC FACILITIES BRIDGE SECTION 3132 Channel Drive Juneau, Alaska 99801 907-465-2975		HERRING COVE BRIDGE SOUTH TONGASS HIGHWAY SITE PLAN
DRAWN BY: Sam Sollie	CHECKED: Elmer Marx	PRELIMINARY PLAN			BRIDGE NO. 253
QUANTITIES BY: Elmer Marx	CHECKED: Checker				DWG. NO. 2

R:\cad\253\253-SITE PLAN Wed, Oct/03/18 01:27pm

STATE	PROJECT DESIGNATION	YEAR	SHEET NO.	TOTAL SHEETS
ALASKA	SFHWY00072/0902043	2019	N3	TtlShts

DRAFT

R:\cad\253\253-RIPRAP LAYOUT Wed, Oct/03/18 01:27pm

DESIGNED BY: Designer	CHECKED: Checker		
DRAWN BY: Sam Sollie	CHECKED: Designer		
QUANTITIES BY: Designer	CHECKED: Checker		

PRELIMINARY PLAN

STATE OF ALASKA
DEPARTMENT OF TRANSPORTATION AND PUBLIC FACILITIES
BRIDGE SECTION
3132 Channel Drive
Juneau, Alaska 99801
907-465-2975

HERRING COVE BRIDGE

SOUTH TONGASS HIGHWAY

RIPRAP LAYOUT

BRIDGE NO. 253

DWG. NO. 3

STATE	PROJECT DESIGNATION	YEAR	SHEET NO.	TOTAL SHEETS
ALASKA	SFHWY00072/0902043	2019	N4	TtlShts

DRAFT

R:\cad\253\253-RIPRAP DETAILS Wed, Oct/03/18 01:27pm

DESIGNED BY: Designer	CHECKED: Checker	PRELIMINARY PLAN	STATE OF ALASKA DEPARTMENT OF TRANSPORTATION AND PUBLIC FACILITIES BRIDGE SECTION 3132 Channel Drive Juneau, Alaska 99801 907-465-2975
DRAWN BY: Sam Sollie	CHECKED: Designer		
QUANTITIES BY: Designer	CHECKED: Checker		

HERRING COVE BRIDGE

SOUTH TONGASS HIGHWAY

RIPRAP DETAILS

BRIDGE NO. 253

DWG. NO. 4

STATE	PROJECT DESIGNATION	YEAR	SHEET NO.	TOTAL SHEETS
ALASKA	SFHWY00072/0902043	2019	N5	TtlShts

REINFORCING STEEL - ABUTMENT I

MARK	NOTE	SIZE	NO.	LENGTH	TYPE	BENDING DIAGRAM
A401		4	132	12'-3"	STIRRUP	A401
A402	E	4	40	7'-0"	---	
A501	E	5	50	15'-11"	STIRRUP	A501
A601		6	10	50'-8"	---	
A602	E	6	9	48'-6"	---	
A603	E	6	8	3'-3"	---	
A604	E	6	7	50'-8"	---	
A701	E	7	8	3'-0"	BENT	A701
A1001	H,M	10	14	50'-8"	---	A1001

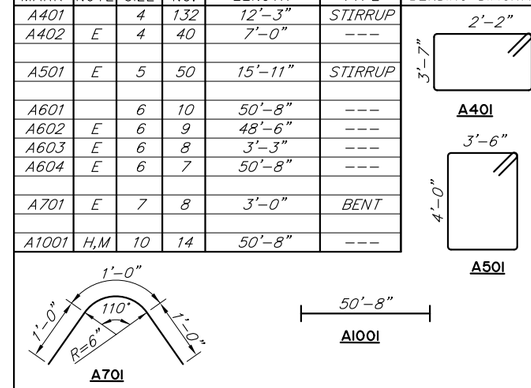

E – Epoxy-Coated
H – Headed Reinforcing Steel
M – Match cross slope

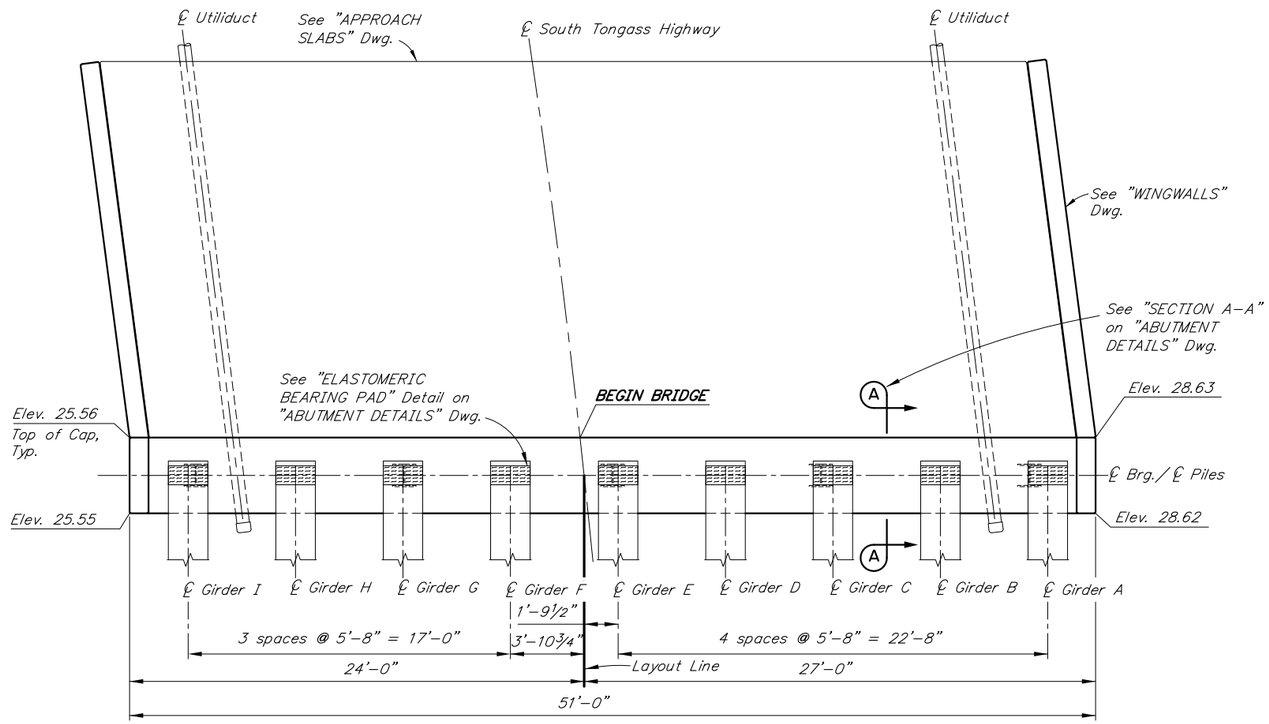

PLAN

12 0 4 8
In. Feet

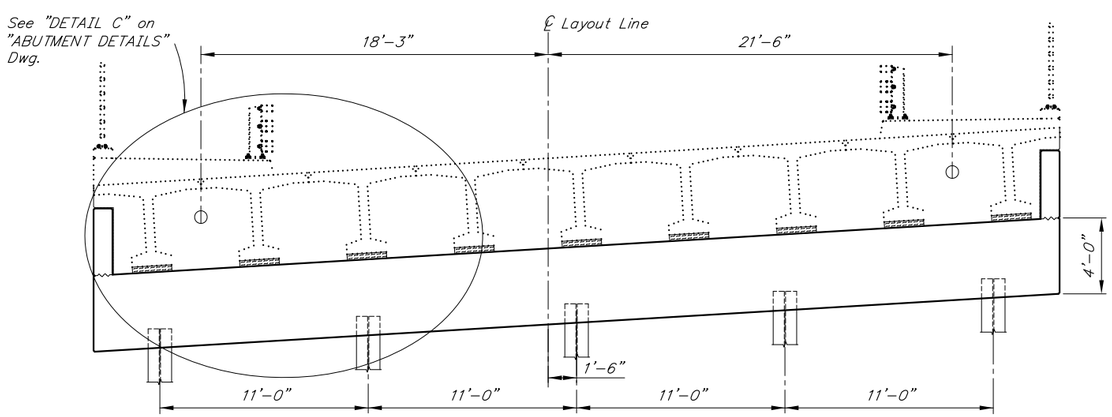

ELEVATION
(Looking Back on Station)

12 0 4 8
In. Feet

DRAFT

DESIGNED BY: Elmer Marx	CHECKED: Checker		
DRAWN BY: Sam Sollie	CHECKED: Elmer Marx		
QUANTITIES BY: Elmer Marx	CHECKED: Checker		

STATE OF ALASKA
DEPARTMENT OF TRANSPORTATION AND PUBLIC FACILITIES
BRIDGE SECTION
3132 Channel Drive
Juneau, Alaska 99801
907-465-2975

HERRING COVE BRIDGE

SOUTH TONGASS HIGHWAY

ABUTMENT 1

BRIDGE NO. 253
DWG. NO. 5

R:\cad\253\253-1-ABUT 1 Wed, Oct/03/18 01:29pm

STATE	PROJECT DESIGNATION	YEAR	SHEET NO.	TOTAL SHEETS
ALASKA	SFHWY00072/0902043	2019	N6	TtlShts

REINFORCING STEEL - ABUTMENT 2

MARK	NOTE	SIZE	NO.	LENGTH	TYPE	BENDING DIAGRAM
A401		4	132	12'-3"	STIRRUP	A401
A501	E	5	50	15'-11"	STIRRUP	A501
A601		6	10	50'-8"	---	
A602	E	6	9	48'-6"	---	
A603	E	6	8	3'-3"	---	
A604	E	6	7	50'-8"	---	
A701	E	7	8	3'-0"	BENT	A701
A1001	H,M	10	14	50'-8"	---	A1001

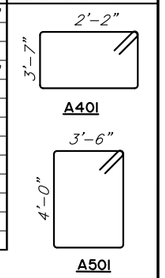

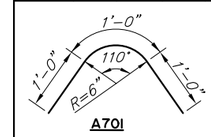

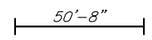

E – Epoxy-Coated
H – Headed Reinforcing Steel
M – Match cross slope

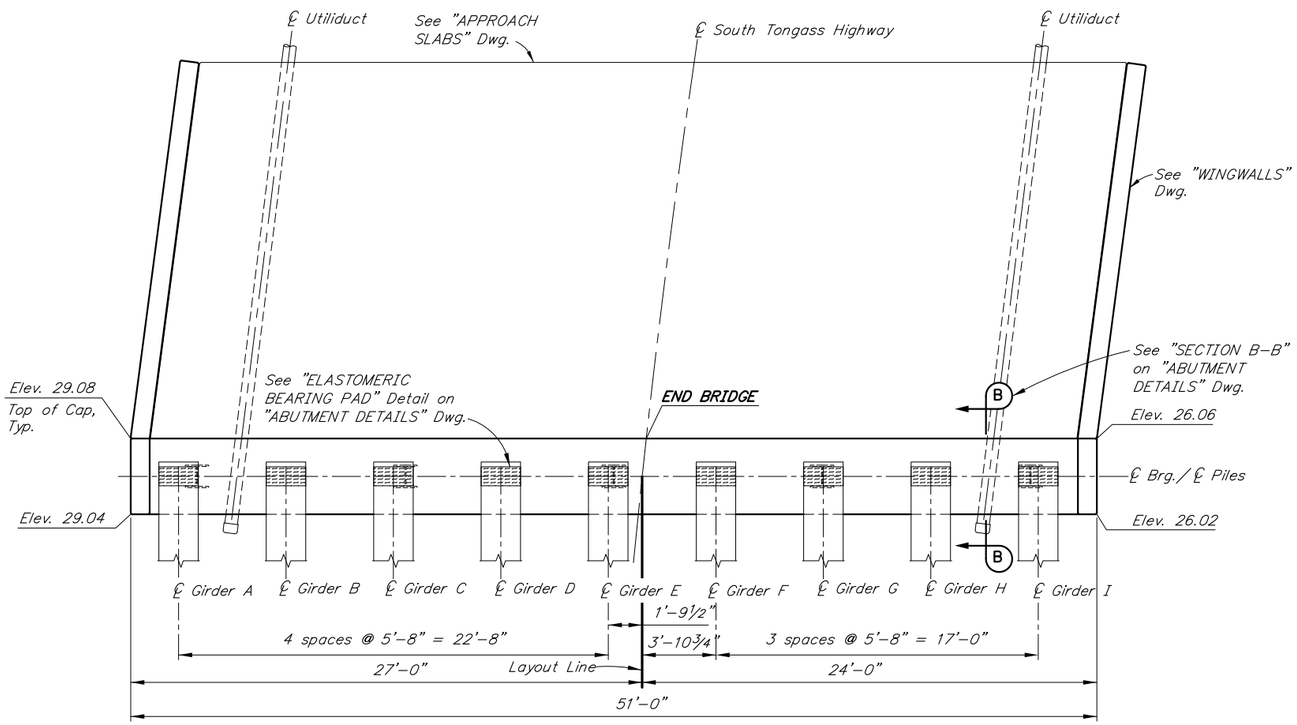

PLAN

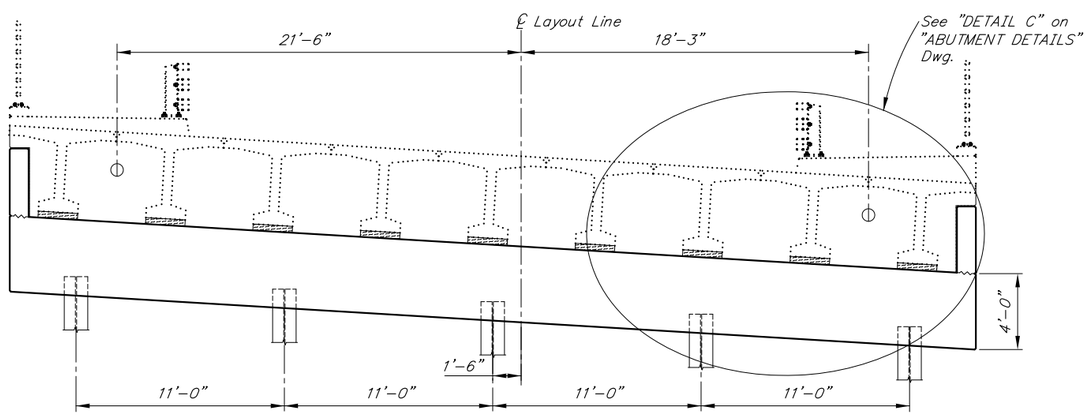

ELEVATION

DRAFT

DESIGNED BY: Elmer Marx	CHECKED: Checker	STATE OF ALASKA DEPARTMENT OF TRANSPORTATION AND PUBLIC FACILITIES BRIDGE SECTION 3132 Channel Drive Juneau, Alaska 99801 907-465-2975	HERRING COVE BRIDGE SOUTH TONGASS HIGHWAY ABUTMENT 2
DRAWN BY: Sam Sollie	CHECKED: Elmer Marx		BRIDGE NO. 253
QUANTITIES BY: Elmer Marx	CHECKED: Checker		DWG. NO. 6

R:\cad\253\253-1-ABUT 2 Wed, Oct/03/18 01:29pm

STATE	PROJECT DESIGNATION	YEAR	SHEET NO.	TOTAL SHEETS
ALASKA	SFHWY00072/0902043	2019	N7	TtlShts

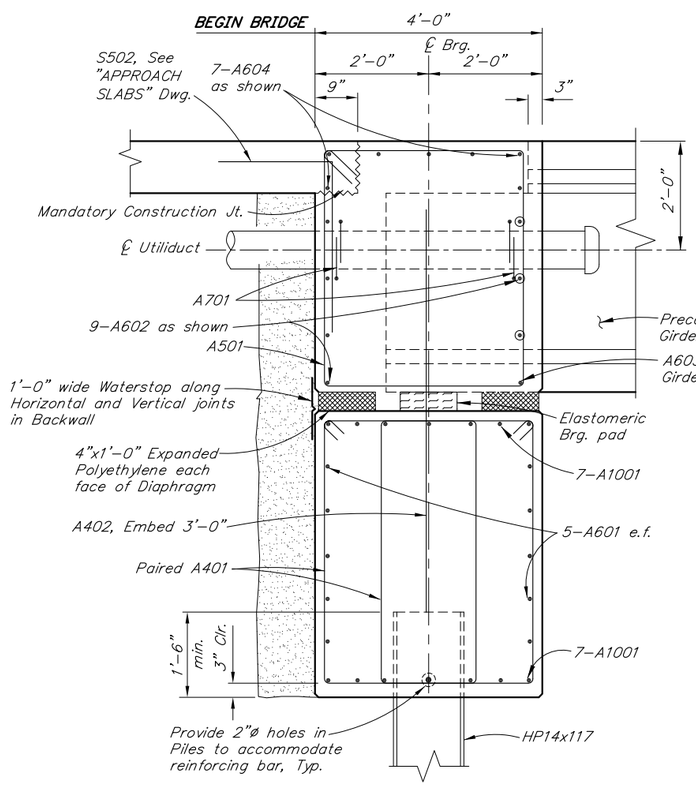

SECTION A-A

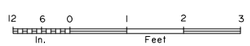

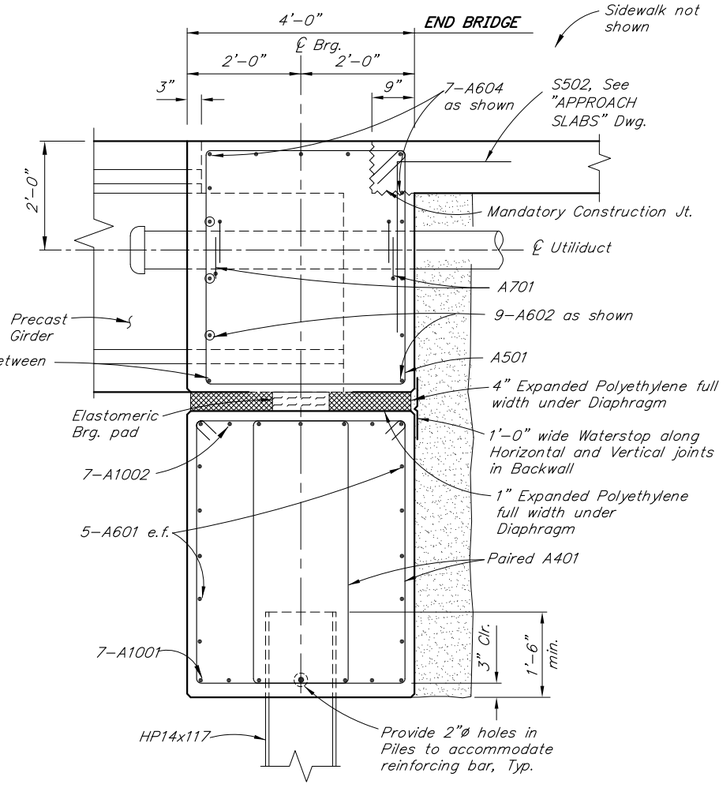

SECTION B-B

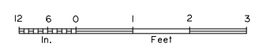

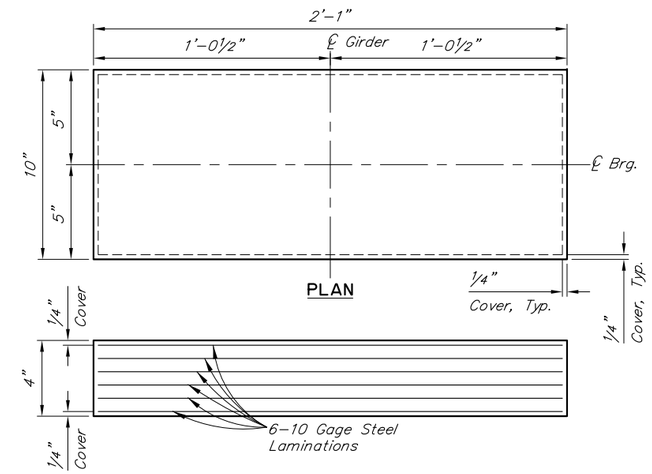

ELEVATION
ELASTOMERIC BEARING PAD

Grade 5
Shear Modulus = 0.115 ksi
Dead Load = 104 k Live
Load = 73 k

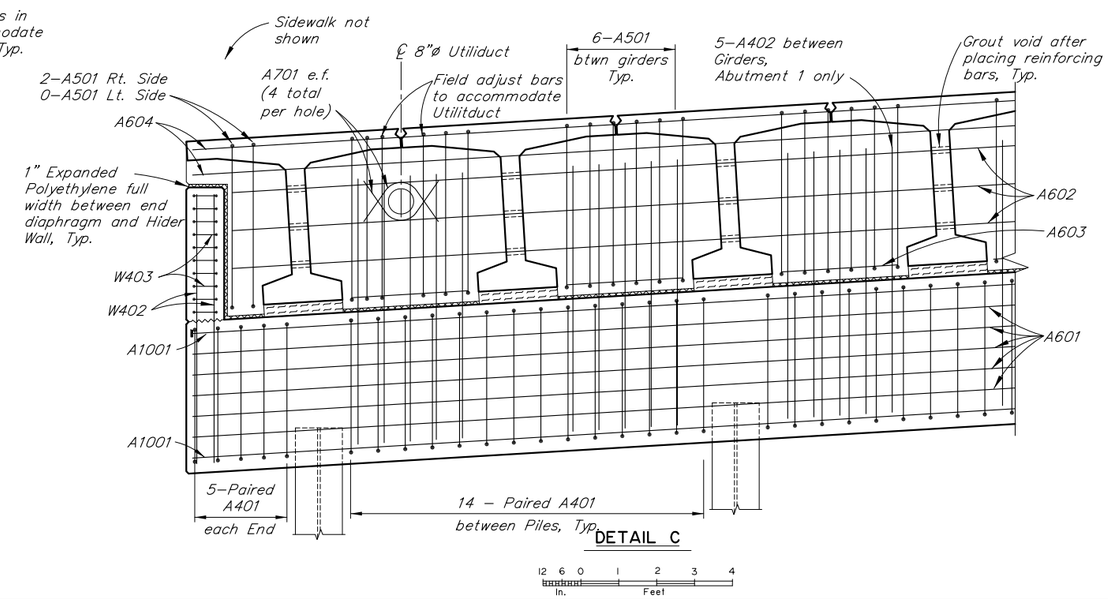

DETAIL C

DRAFT

DESIGNED BY: Elmer Marx	CHECKED: Checker	STATE OF ALASKA **DEPARTMENT OF TRANSPORTATION AND PUBLIC FACILITIES** BRIDGE SECTION 3132 Channel Drive Juneau, Alaska 99801 907-465-2975	**HERRING COVE BRIDGE** SOUTH TONGASS HIGHWAY **ABUTMENT DETAILS**
DRAWN BY: Sam Sollie	CHECKED: Elmer Marx		BRIDGE NO. 253
QUANTITIES BY: Elmer Marx	CHECKED: Checker		DWG. NO. 7

R:\cad\253\253-1-ABUT DET Wed, Oct/03/18 01:28pm

STATE	PROJECT DESIGNATION	YEAR	SHEET NO.	TOTAL SHEETS
ALASKA	SFHWY00072/0902043	2019	N8	TtlShts

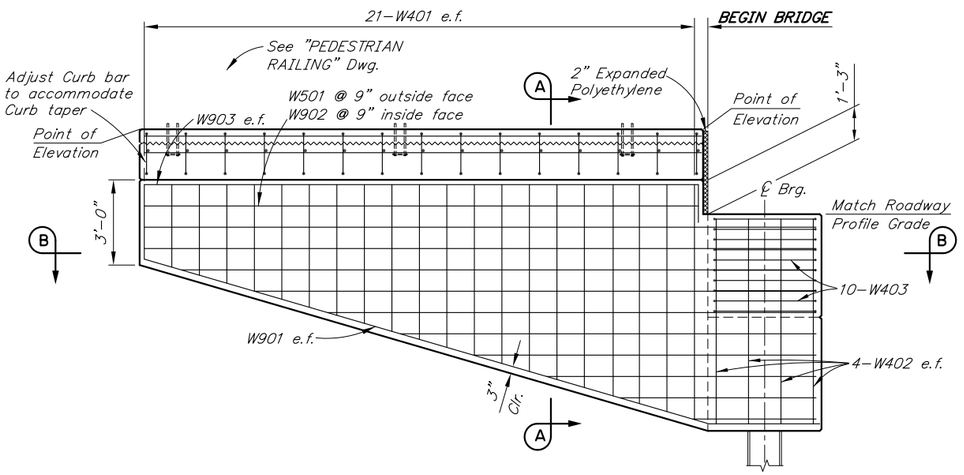

ELEVATION

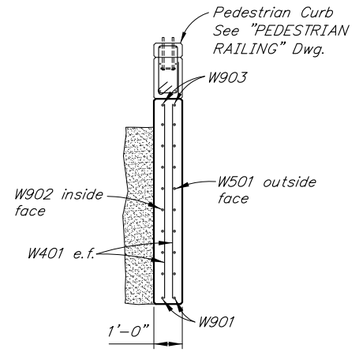

SECTION A-A

DRAFT

REINFORCING STEEL - ONE ABUTMENT

MARK	NOTE	SIZE	NO.	LENGTH	TYPE
W401		4	84	VARIES	---
W402		4	16	7'–3"	---
W403		4	20	9'–5"	STIRRUP
W501	M	5	22	VARIES	---
W901	M	9	4	24'–5"	BENT
W902	M	9	22	VARIES	---
W903		9	4	21'–6"	BENT
C402	E,U	4	15	5'–3"	STIRRUP
C402	D,E	4	15	3'–3"	STIRRUP
C502	E	5	4	19'–6"	---

BENDING DIAGRAM

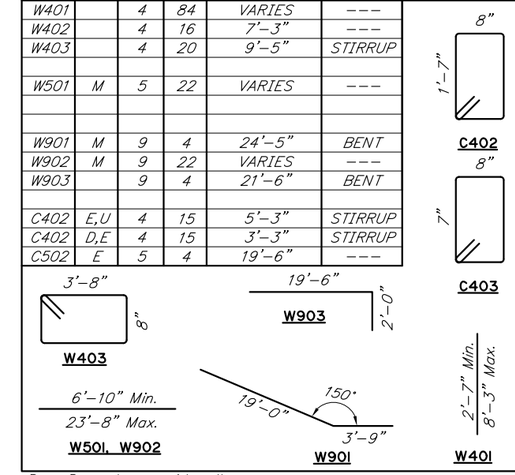

D – Downstream sidewalk
E – Epoxy–Coated
M – Field adjust bar to match Angle
U – Upstream sidewalk

TOP OF WINGWALL ELEVATION TABLE (FT)

LOCATION	A UPSTREAM	B UPSTREAM	C DOWNSTREAM	D DOWNSTREAM
ABUTMENT 1	34.22	34.30	32.08	32.16
ABUTMENT 2	34.82	34.76	32.74	32.66

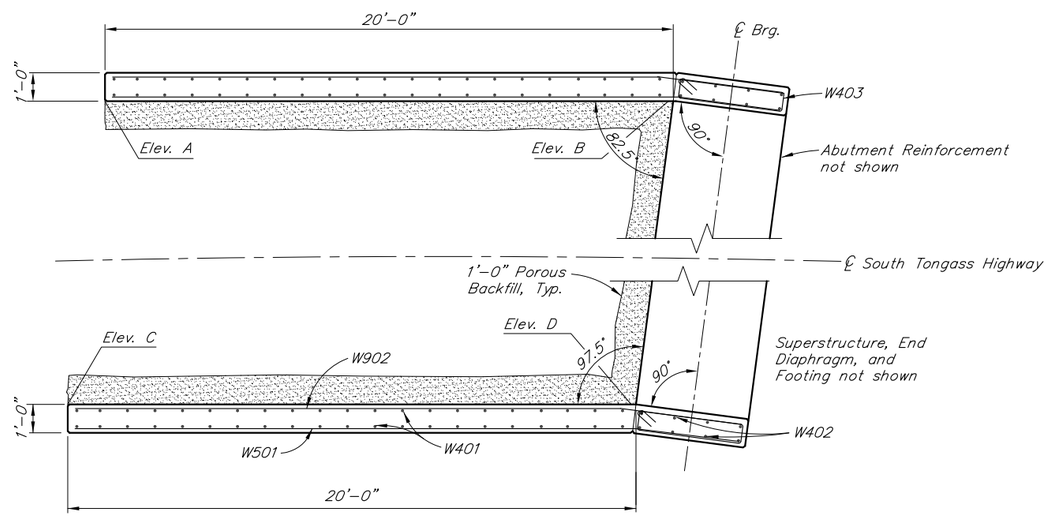

SECTION B-B

(Abut. 1 shown, Abut. 2 similar)

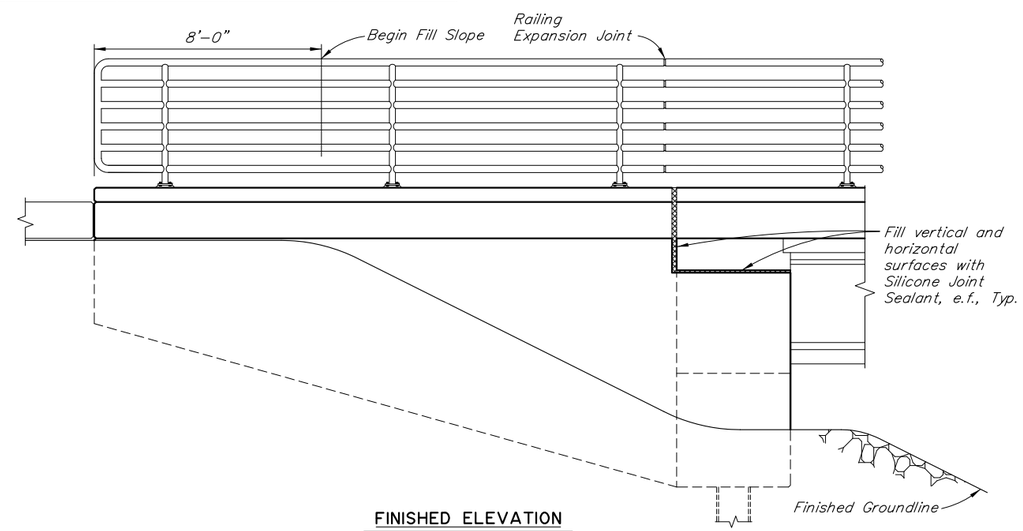

FINISHED ELEVATION

DESIGNED BY: Elmer Marx	CHECKED: Checker	STATE OF ALASKA DEPARTMENT OF TRANSPORTATION AND PUBLIC FACILITIES BRIDGE SECTION 3132 Channel Drive Juneau, Alaska 99801 907–465–2975	HERRING COVE BRIDGE SOUTH TONGASS HIGHWAY WINGWALLS
DRAWN BY: Sam Sollie	CHECKED: Elmer Marx		BRIDGE NO. 253
QUANTITIES BY: Elmer Marx	CHECKED: Checker		DWG. NO. 8

R:\cad\253\253–1–WINGWALLS Wed, Oct/03/18 01:28pm

STATE	PROJECT DESIGNATION	YEAR	SHEET NO.	TOTAL SHEETS
ALASKA	SFHWY00072/0902043	2019	N9	TtlShts

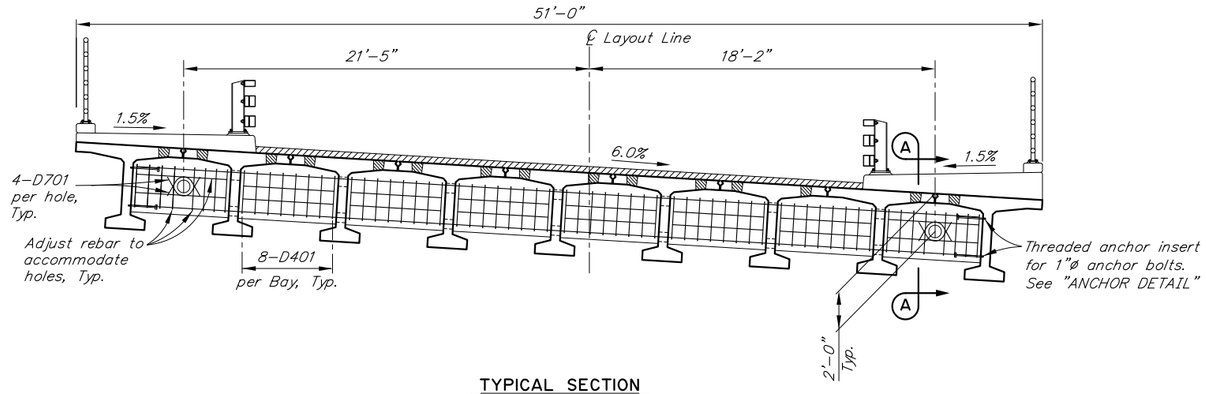

TYPICAL SECTION

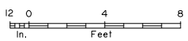

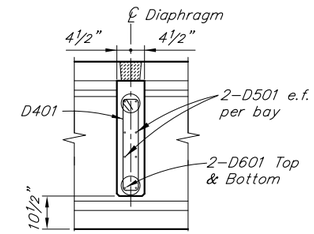

SECTION A-A

REINFORCING STEEL - ONE DIAPHRAGM

MARK	NOTE	SIZE	NO.	LENGTH	TYPE	BENDING DIAGRAM
D401	E	4	64	6'-1"	STIRRUP	
D501	E	5	32	4'-9"	---	
D601	E,S	6	4	44'-7"	---	
D701	E	7	8	3'-0"	BENT	

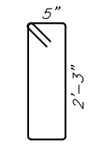

D401

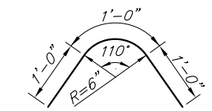

D701

E – Epoxy-Coated
S – Splice permitted. Length does not include splices

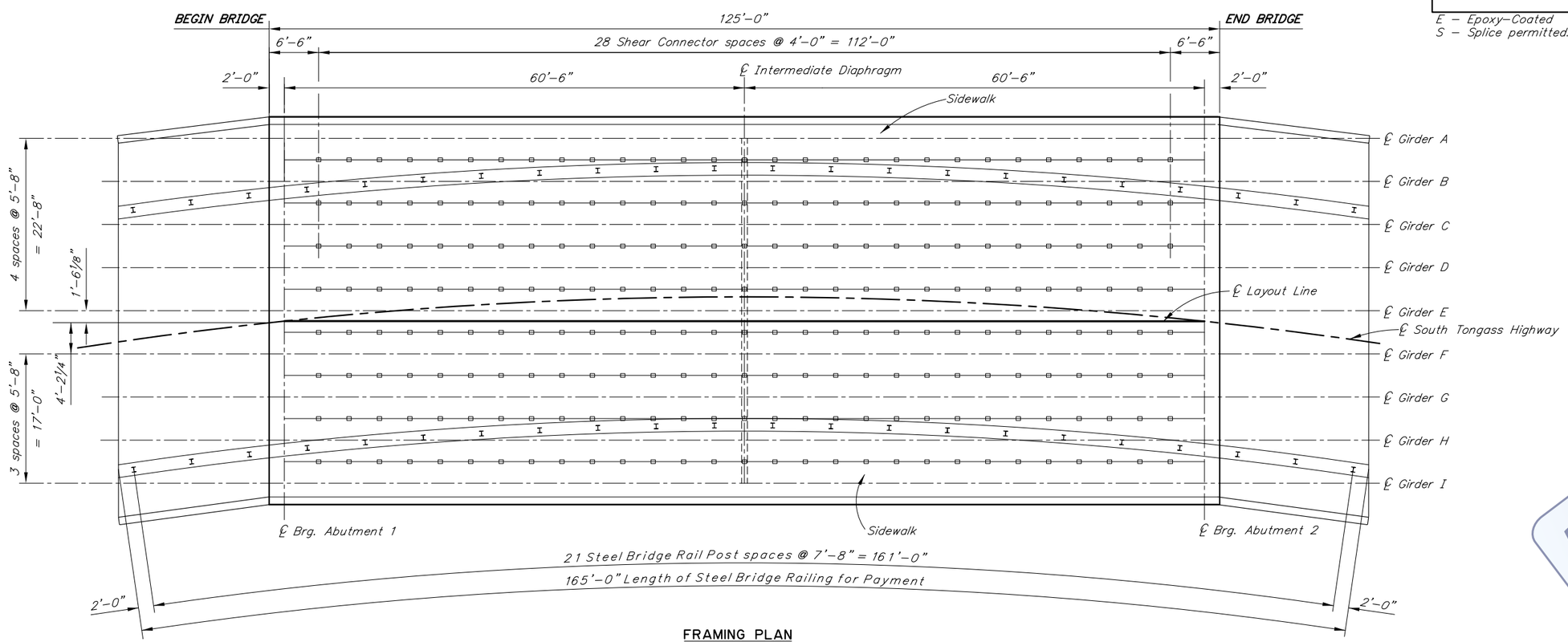

FRAMING PLAN

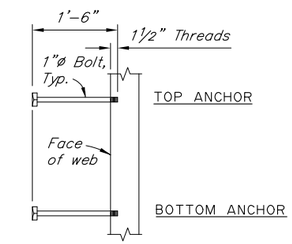

ASTM A307 GALVANIZED

ANCHOR DETAIL

No Scale

DRAFT

DESIGNED BY: Elmer Marx	CHECKED: Checker	STATE OF ALASKA DEPARTMENT OF TRANSPORTATION AND PUBLIC FACILITIES BRIDGE SECTION 3132 Channel Drive Juneau, Alaska 99801 907-465-2975	HERRING COVE BRIDGE SOUTH TONGASS HIGHWAY FRAMING PLAN AND TYPICAL SECTION
DRAWN BY: Sam Sollie	CHECKED: Elmer Marx		BRIDGE NO. 253
QUANTITIES BY: Elmer Marx	CHECKED: Checker		DWG. NO. 9

R:\cad\253\253-1-FRAMING PLAN Wed, Oct/03/18 01:28pm

STATE	PROJECT DESIGNATION	YEAR	SHEET NO.	TOTAL SHEETS
ALASKA	SFHWY00072/0902043	2019	N10	TtlShts

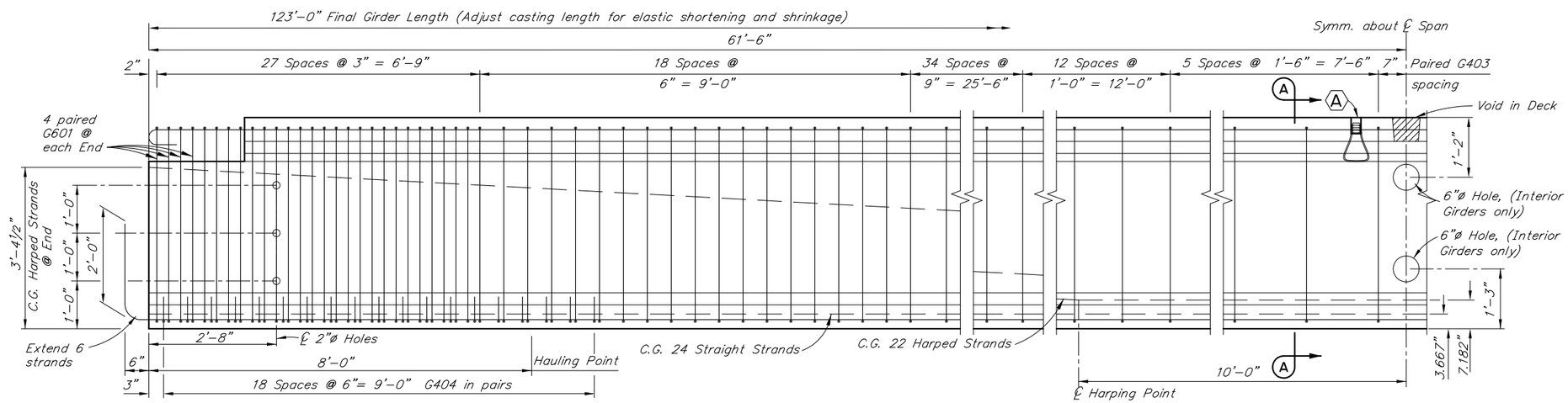

ELEVATION

REINFORCING STEEL-ONE GIRDER					
MARK	NOTE	SIZE	NO.	LENGTH	TYPE
G401	E	4	177	5'-5"	BENT
G401X	E	4	202	5'-5"	BENT
G402	E,S	4	8	117'-2"	---
G402X	E,S	4	8	117'-2"	---
G403	E	4	372	5'-11"	BENT
G404	E	4	76	3'-3"	BENT
G501	E	5	177	5'-2"	---
G501X	E	5	202	5'-10"	BENT
G502	E,S	5	8	124'-2"	BENT
G502X	E,S	5	8	124'-2"	BENT
G601	E	6	16	5'-11"	BENT

BENDING DIAGRAM

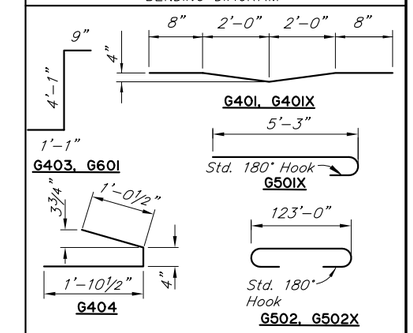

E – Epoxy-Coated
S – Length does not include splices
X – Exterior Girders only

DRAFT

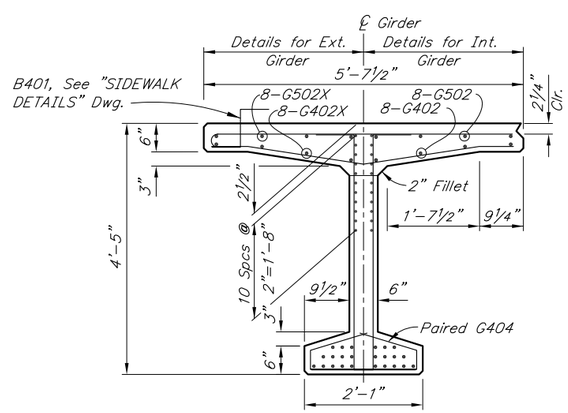

END VIEW

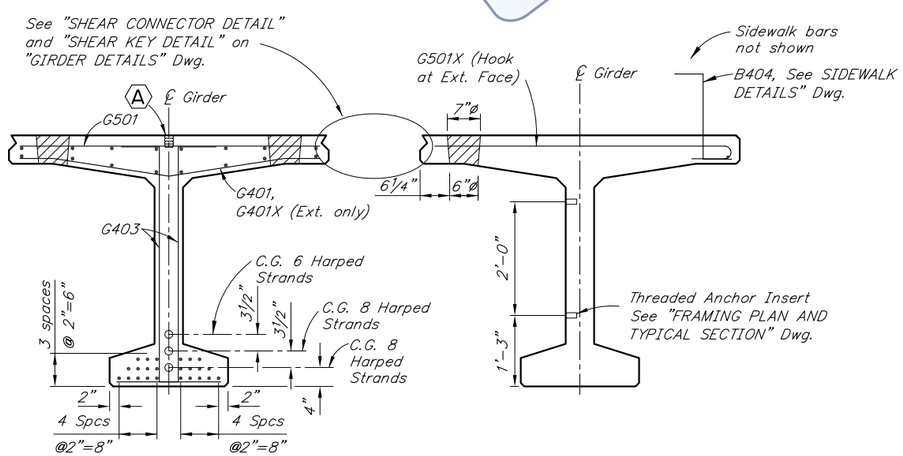

SECTION A-A

EXTERIOR GIRDER NEAR MID SPAN

(Unrelated Reinforcement not shown)

GIRDER NOTES:

Class P Concrete: at Stress Transfer.....f'ci = 7,000 psi
at 28 Days.....f'c = 8,500 psi

0.6"ø low-relaxation prestressing strands with an ultimate strength of 270 ksi and a cross sectional area of 0.217 in².

Steel stresses: Pretensioning – Jacking Stress 189 ksi
After initial losses 167 ksi
After all losses 138 ksi

One inch clear cover on reinforcing steel unless otherwise noted.

See "FRAMING PLAN AND TYPICAL SECTION" Dwg. for Shear Connector spacing.

Deflect forms to compensate for camber.

Galvanize structural steel embedded in girders except for shear connectors.

(A) 1"X1'-0" Coil Anchor Insert for vertical adjustment of girders. Recess 2". Prevent concrete from filling hole.

Omit Shear Key, Shear Key Connector and Deck Void in exterior face of exterior girders.

Cast ends of girders plumb with respect to roadway grade. Install web holes and web anchor inserts parallel to ℄ bearing.

Finish top flange with light broom finish. Roughen the surface under the Sidewalks.

DESIGNED BY: Elmer Marx	CHECKED: Checker	STATE OF ALASKA DEPARTMENT OF TRANSPORTATION AND PUBLIC FACILITIES BRIDGE SECTION 3132 Channel Drive Juneau, Alaska 99801 907-465-2975	HERRING COVE BRIDGE SOUTH TONGASS HIGHWAY GIRDERS
DRAWN BY: Sam Sollie	CHECKED: Elmer Marx		BRIDGE NO. 253
QUANTITIES BY: Elmer Marx	CHECKED: Checker		DWG. NO. 10

R:\cad\253\253-1-GIRDERS Wed, Oct/03/18 01:28pm

STATE	PROJECT DESIGNATION	YEAR	SHEET NO.	TOTAL SHEETS
ALASKA	SFHWY00072/0902043	2019	N11	TtlShts

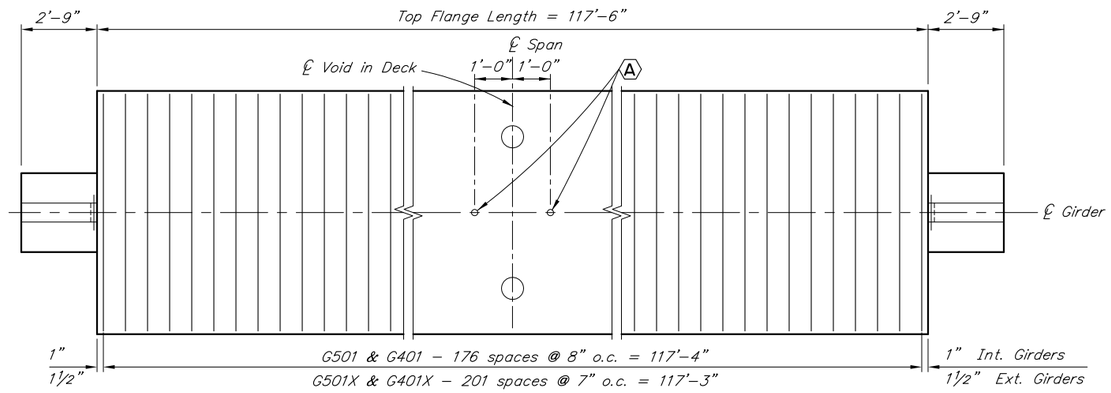

PLAN
No Scale

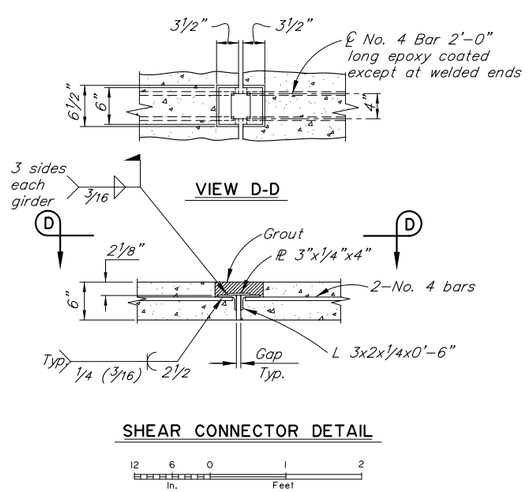

SHEAR CONNECTOR DETAIL

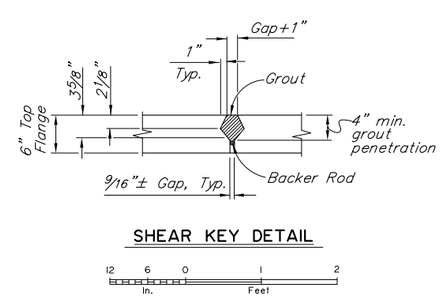

SHEAR KEY DETAIL

DRAFT

DESIGNED BY: Elmer Marx	CHECKED: Checker		STATE OF ALASKA **DEPARTMENT OF TRANSPORTATION AND PUBLIC FACILITIES** BRIDGE SECTION 3132 Channel Drive Juneau, Alaska 99801 907-465-2975		**HERRING COVE BRIDGE** SOUTH TONGASS HIGHWAY **GIRDER DETAILS**	BRIDGE NO. 253 DWG. NO. 11
DRAWN BY: Sam Sollie	CHECKED: Elmer Marx					
QUANTITIES BY: Elmer Marx	CHECKED: Checker					

R:\cad\253\253-1-GIRDER DETAILS Wed, Oct/03/18 01:28pm

STATE	PROJECT DESIGNATION	YEAR	SHEET NO.	TOTAL SHEETS
ALASKA	SFHWY00072/0902043	2019	N12	TtlShts

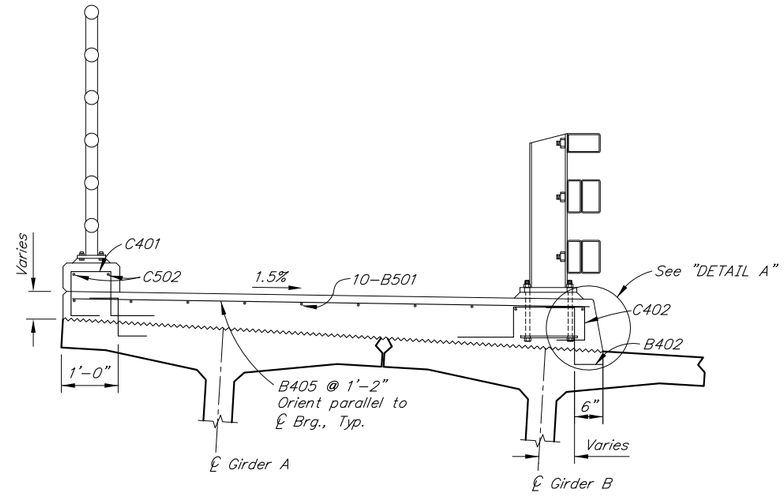

UPSTREAM/ LEFT SIDEWALK SECTION

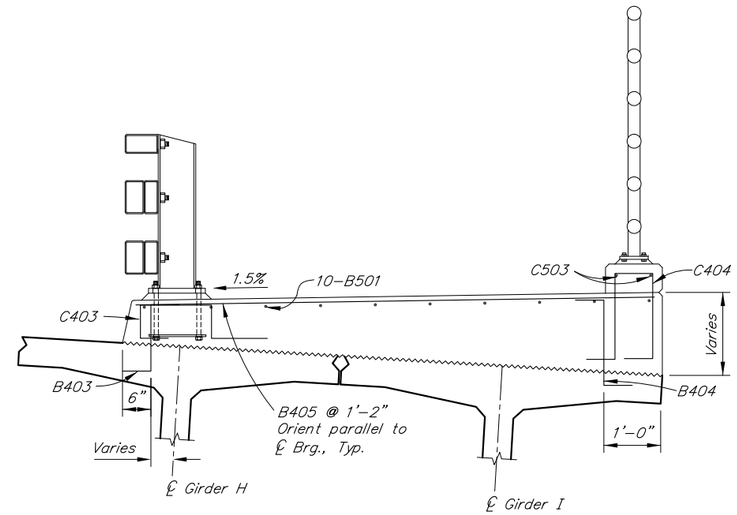

DOWNSTREAM/ RIGHT SIDEWALK SECTION

REINFORCING STEEL

MARK	NOTE	SIZE	NO.	LENGTH	TYPE
B401	E	4	142	1'–8"	BENT
B402	E	4	142	2'–0"	BENT
B403	E	4	142	2'–2"	BENT
B404	E	4	142	2'–6"	BENT
B405	E	4	284	VARIES	---
B501	E	5	20	164'–8"	---
C401	E	4	111	3'–8"	BENT
C402	E	4	111	3'–11"	BENT
C403	E	4	111	3'–4"	BENT
C404	E	4	111	5'–2"	BENT
C502	E	5	4	164'–8"	---

BENDING DIAGRAM

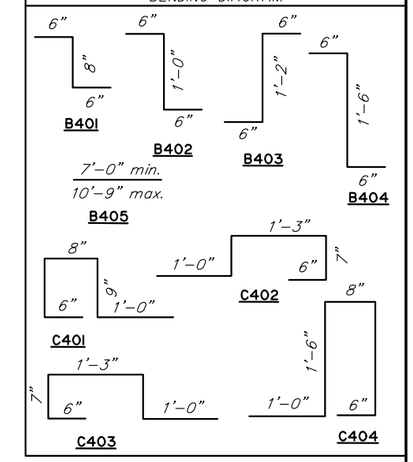

DRAFT

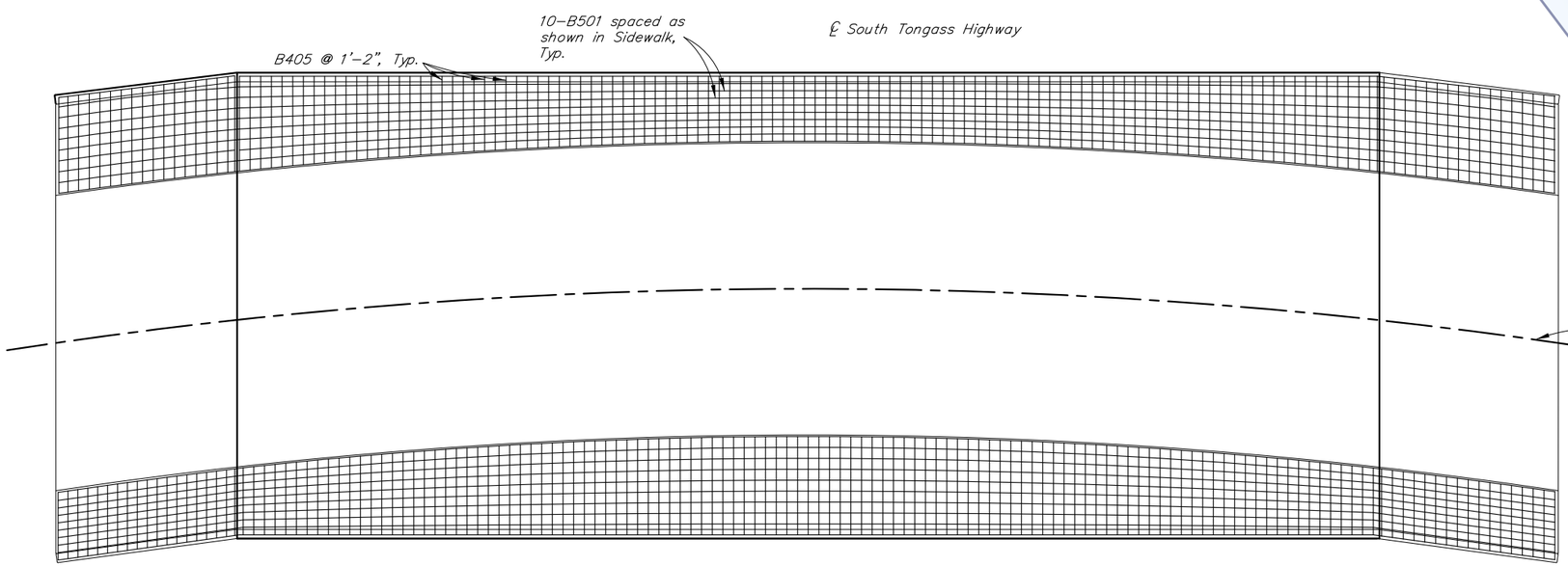

SIDEWALK PLAN

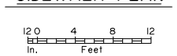

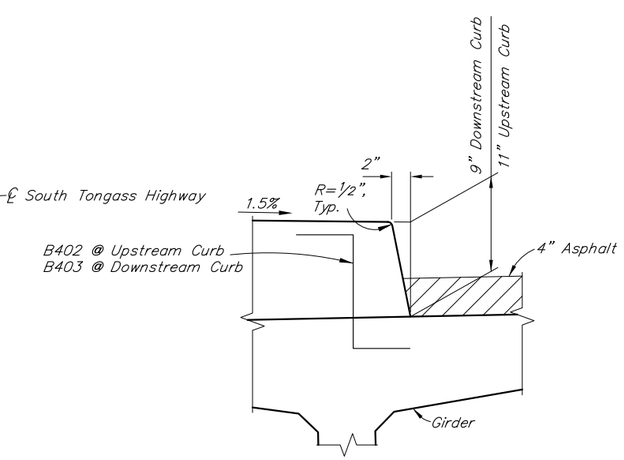

DETAIL A

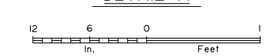

DESIGNED BY: Elmer Marx	CHECKED: Checker	STATE OF ALASKA **DEPARTMENT OF TRANSPORTATION AND PUBLIC FACILITIES** BRIDGE SECTION 3132 Channel Drive Juneau, Alaska 99801 907–465–2975	**HERRING COVE BRIDGE** SOUTH TONGASS HIGHWAY **SIDEWALK DETAILS**
DRAWN BY: Sam Sollie	CHECKED: Elmer Marx		
QUANTITIES BY: Elmer Marx	CHECKED: Checker		BRIDGE NO. 253 DWG. NO. 12

R:\cad\253\253-1-SIDEWALK Wed, Oct/03/18 01:28pm

STATE	PROJECT DESIGNATION	YEAR	SHEET NO.	TOTAL SHEETS
ALASKA	SFHWY00072/0902043	2019	N13	TtlShts

REINFORCING STEEL - ONE APPROACH SLAB

MARK	NOTE	SIZE	NO.	LENGTH	TYPE	BENDING DIAGRAM
S401	E	4	62	48'-11"	---	
S501	E	5	98	20'-5"	---	
S502	E	5	31	5'-0"	BENT	2'-0" / 3'-0" (S502)
S801	E	8	98	20'-5"	---	

E - Epoxy-Coated

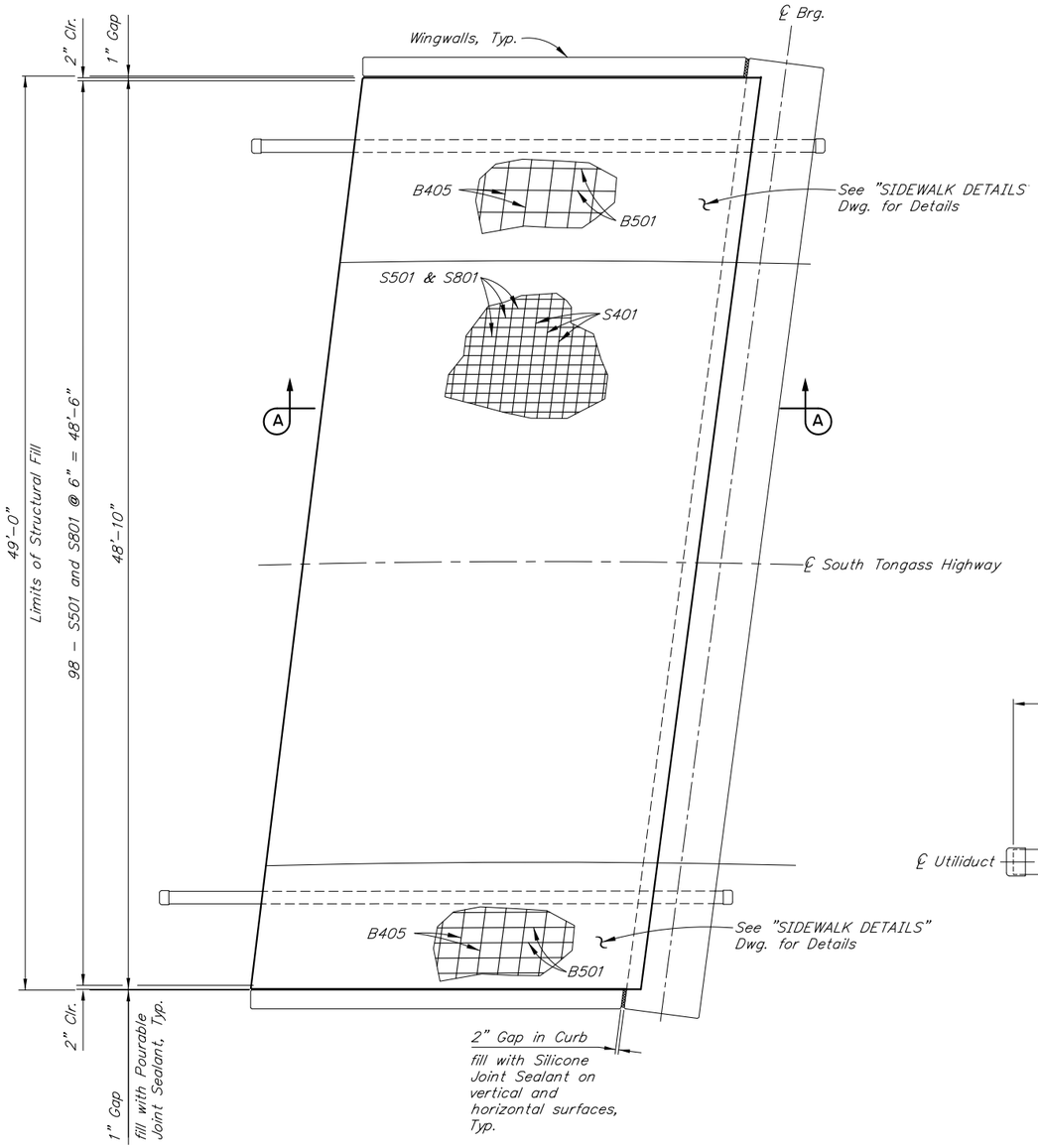

PLAN

(Abutment 1 shown Abutment 2 similar)

12 0 4 8
In. Feet

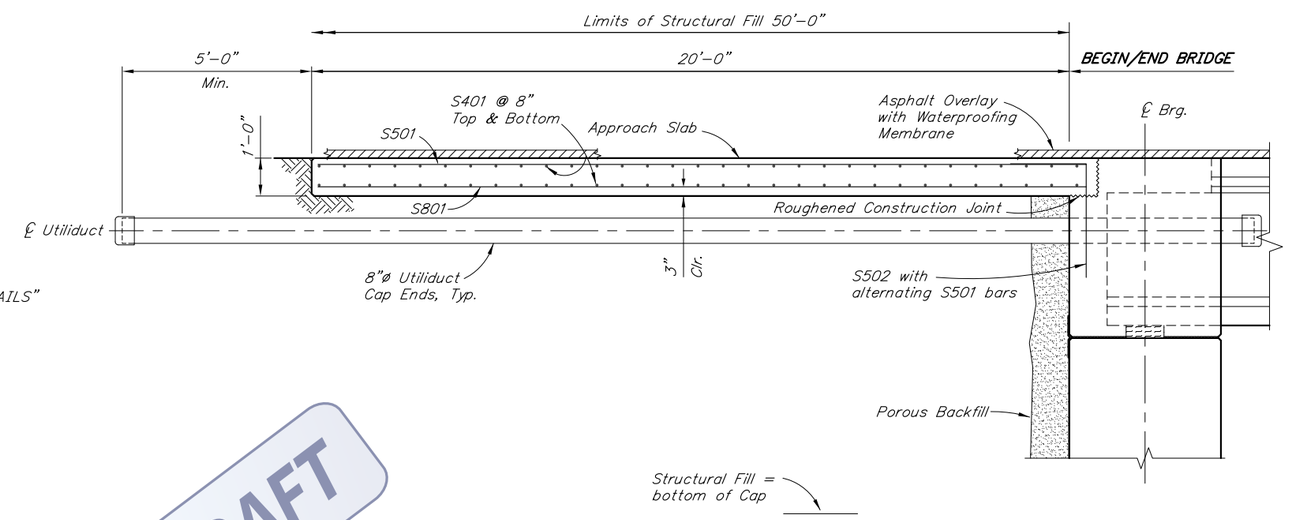

SECTION A-A

12 6 0 1 2 3 4
In. Feet

DRAFT

DESIGNED BY: Elmer Marx	CHECKED: Checker	STATE OF ALASKA **DEPARTMENT OF TRANSPORTATION AND PUBLIC FACILITIES** BRIDGE SECTION 3132 Channel Drive Juneau, Alaska 99801 907-465-2975	**HERRING COVE BRIDGE** SOUTH TONGASS HIGHWAY **APPROACH SLABS**
DRAWN BY: Sam Sollie	CHECKED: Elmer Marx		BRIDGE NO. 253
QUANTITIES BY: Elmer Marx	CHECKED: Checker		DWG. NO. 13

R:\cad\253\253-1-APPROACH SLABS Wed, Oct/03/18 01:28pm

STATE	PROJECT DESIGNATION	YEAR	SHEET NO.	TOTAL SHEETS
ALASKA	SFHWY00072/0902043	2019	N14	TtlShts

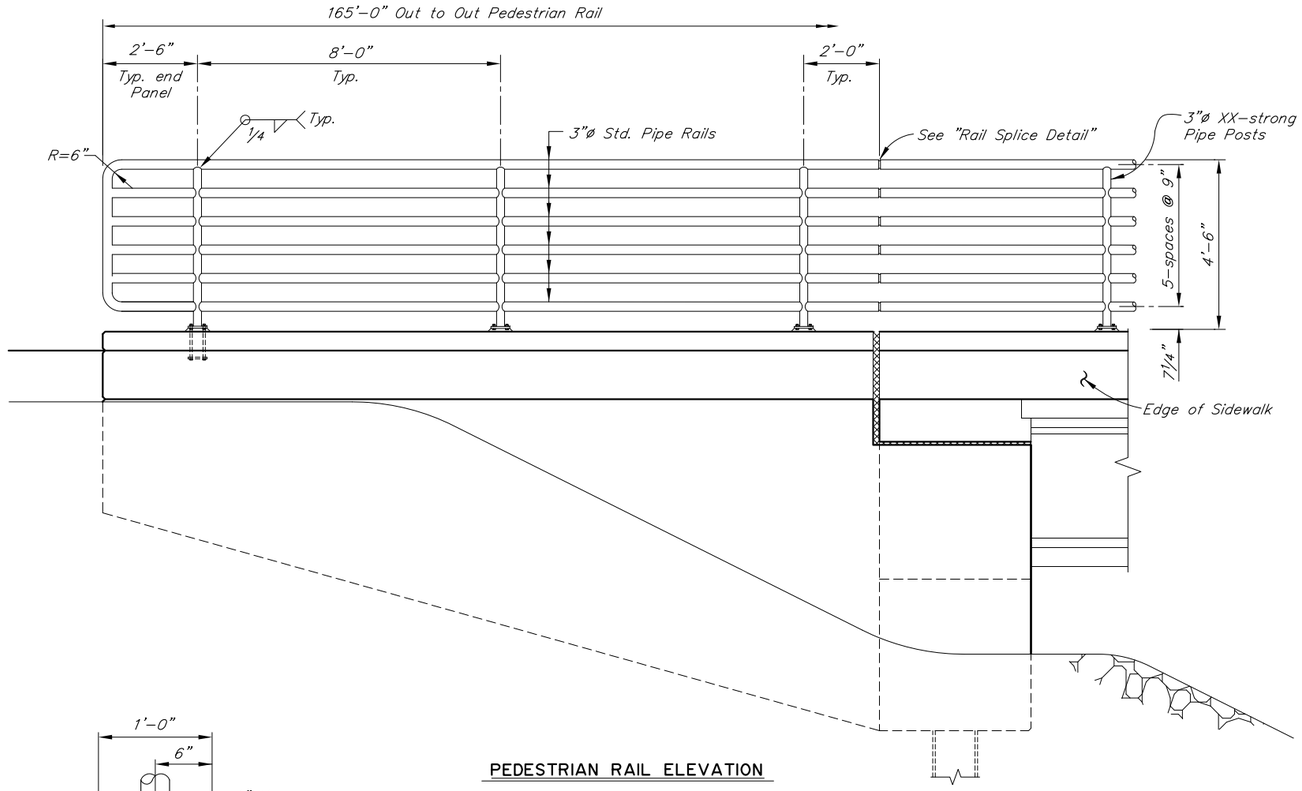

PEDESTRIAN RAIL ELEVATION

12 6 0 1 2 3 4
In. Feet

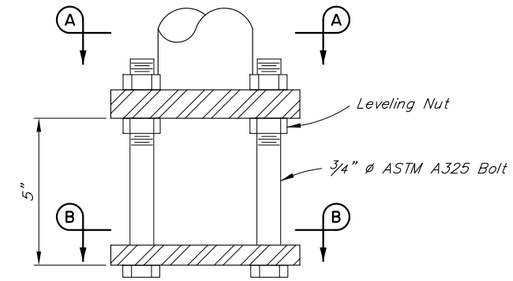

DETAIL "A"

No scale

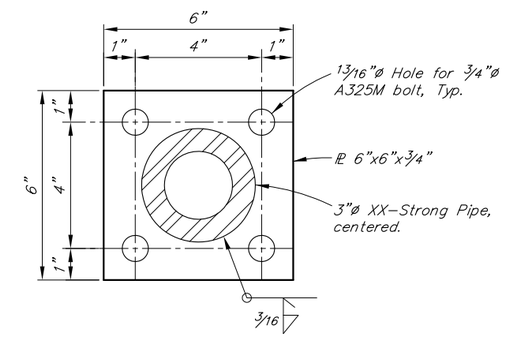

SECTION A-A

No Scale

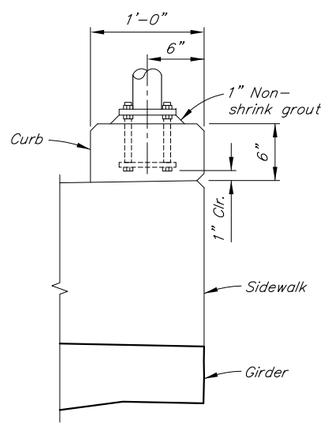

SECTION AT EDGE OF DECK

12 6 0 1
In. Feet

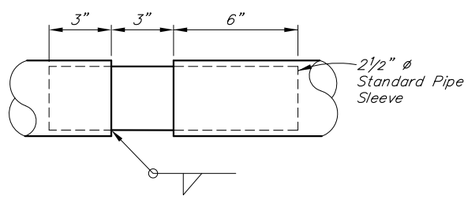

RAIL SPLICE DETAIL

No scale

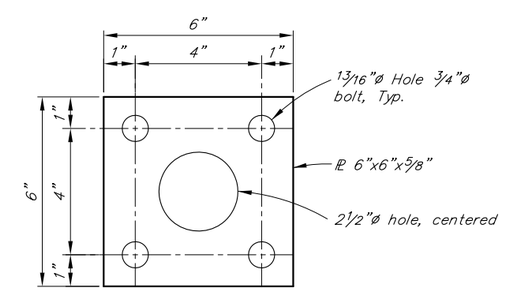

SECTION B-B

No Scale

DRAFT

NOTES:

1. Galvanize all steel for railing in accordance with AASHTO M111.
2. Install all rail posts plumb. Space Rail Splice @ 40' intervals, max.
3. Rail splice required at panel over abutment expansion joint.
4. See "Framing Plan" for rail post layout.

DESIGNED BY: Elmer Marx	CHECKED: Checker	STATE OF ALASKA DEPARTMENT OF TRANSPORTATION AND PUBLIC FACILITIES BRIDGE SECTION 3132 Channel Drive Juneau, Alaska 99801 907-465-2975	HERRING COVE BRIDGE SOUTH TONGASS HIGHWAY PEDESTRIAN RAILING
DRAWN BY: Sam Sollie	CHECKED: Elmer Marx		BRIDGE NO. 253
QUANTITIES BY: Elmer Marx	CHECKED: Checker		DWG. NO. 14

R:\cad\253\253-1-PED RAIL Wed, Oct/03/18 01:28pm

STATE	PROJECT DESIGNATION	YEAR	SHEET NO.	TOTAL SHEETS
ALASKA	SFHWY00072/0902043	2019	N15	TtlShts

DRAFT

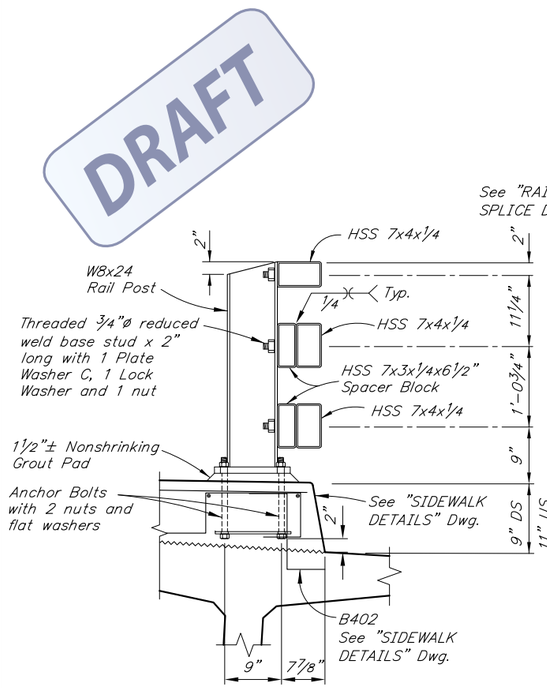

TYPICAL SECTION

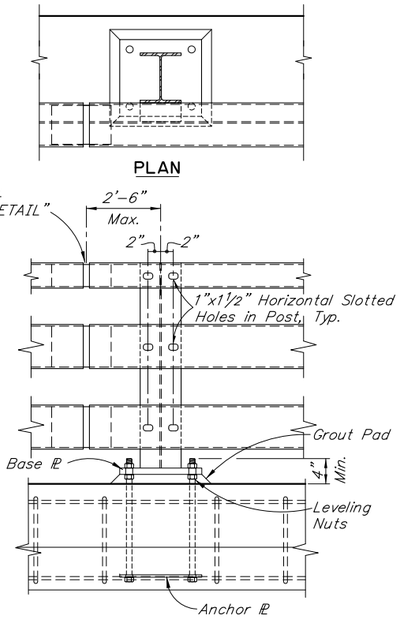

TYPICAL POST ELEVATION

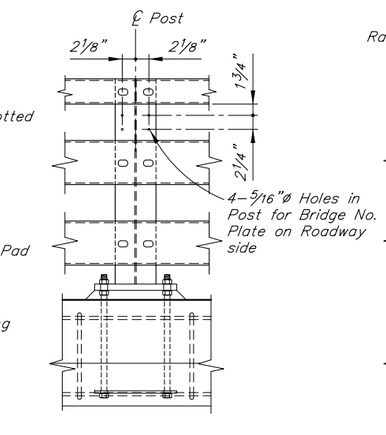

POST ELEVATION

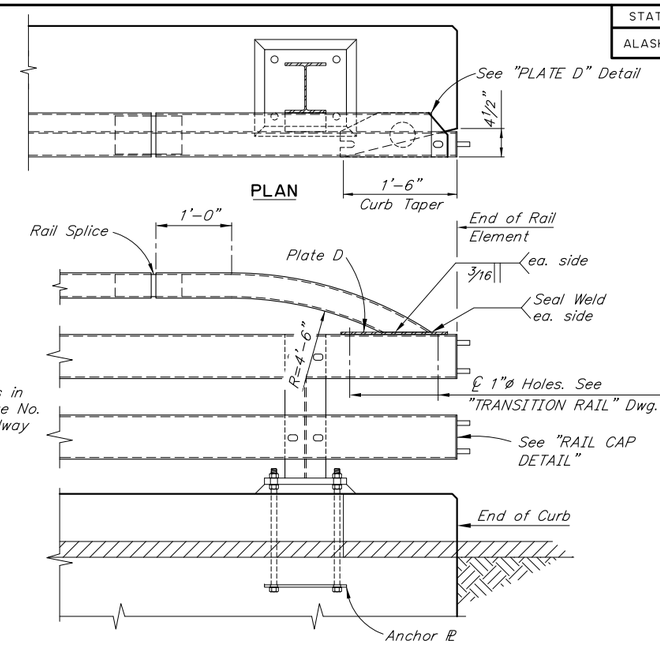

END POST - ELEVATION

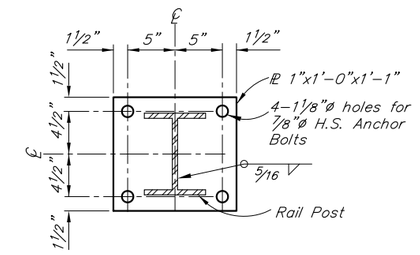

BASE PLATE DETAIL

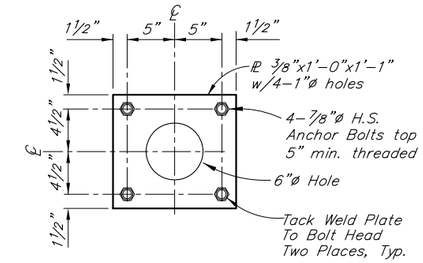

ANCHOR PLATE DETAIL

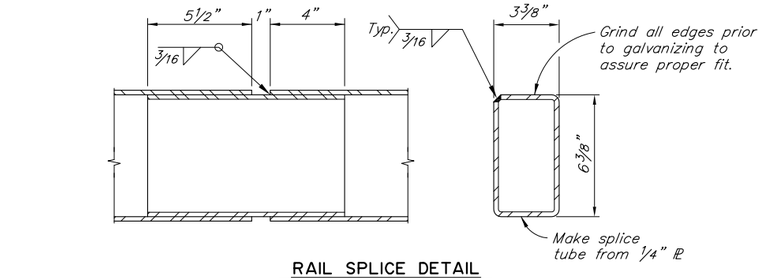

RAIL SPLICE DETAIL

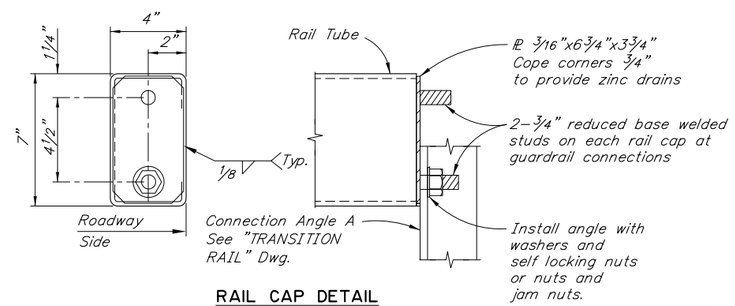

RAIL CAP DETAIL

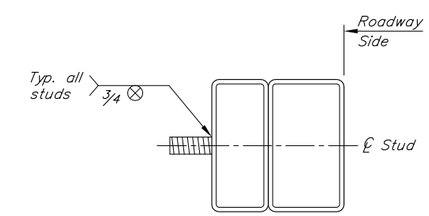

RAILING STUD DETAIL

(Lower rail shown, upper rail similar)
No Scale

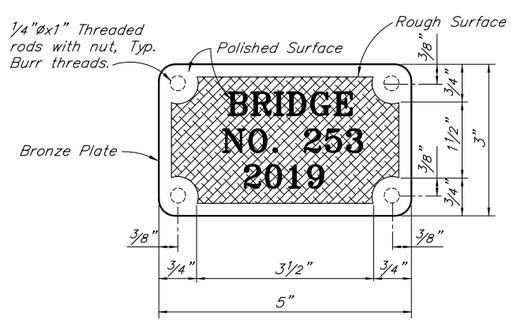

BRONZE BRIDGE NO. PLATE
No Scale

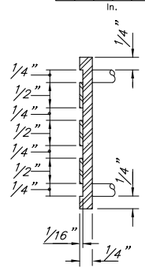

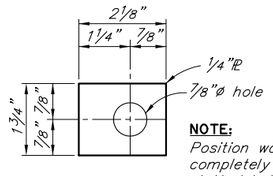

NOTE:
Position washer to completely cover slotted hole

PLATE WASHER C
No Scale

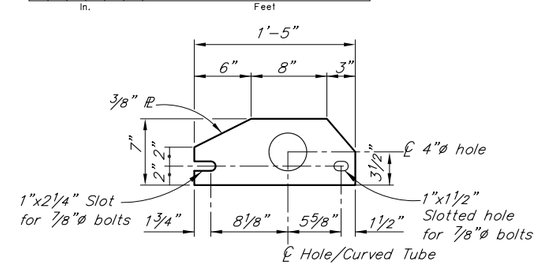

PLATE D

NOTES:

1. Locate bridge number plates as shown (2 total) on "GENERAL LAYOUT" Dwg.
2. Furnish bridge number plates. Use bronze with "Century" type style lettering. Use studs and nuts that conform to UNS C65100 or C65500. Braze 1/4"ø threaded rod to back of plate with nut – 4 required. Use locking nuts or lock washers on all machine bolts.
3. Provide railing expansion joints at 50'-0" max. intervals. Provide a minimum of 2 rail posts between railing expansion joints. Railing expansion joints are required in rail panels that span bridge expansion joints.
4. Install posts plumb.
5. Use grout with a minimum 24-hour f'c of 3,000 psi.
6. See "FRAMING PLAN AND TYPICAL SECTION" Dwg. for rail post spacing.

DESIGNED BY: Elmer Marx	CHECKED: Checker	STATE OF ALASKA DEPARTMENT OF TRANSPORTATION AND PUBLIC FACILITIES BRIDGE SECTION 3132 Channel Drive Juneau, Alaska 99801 907-465-2975	HERRING COVE BRIDGE SOUTH TONGASS HIGHWAY STEEL BRIDGE RAILING
DRAWN BY: Sam Sollie	CHECKED: Elmer Marx		BRIDGE NO. 253
QUANTITIES BY: Elmer Marx	CHECKED: Checker		DWG. NO. 15

R:\cad\253\253-1-STEEL RAIL Wed, Oct/03/18 01:28pm

STATE	PROJECT DESIGNATION	YEAR	SHEET NO.	TOTAL SHEETS
ALASKA	SFHWY00072/0902043	2019	N16	TtlShts

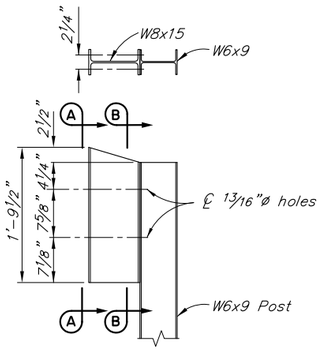

THRIE BEAM STEEL BLOCKOUT

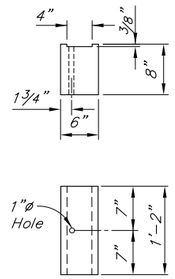

WOOD BLOCKOUT

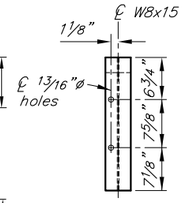

VIEW A-A

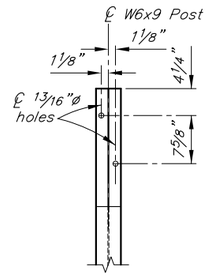

SECTION B-B

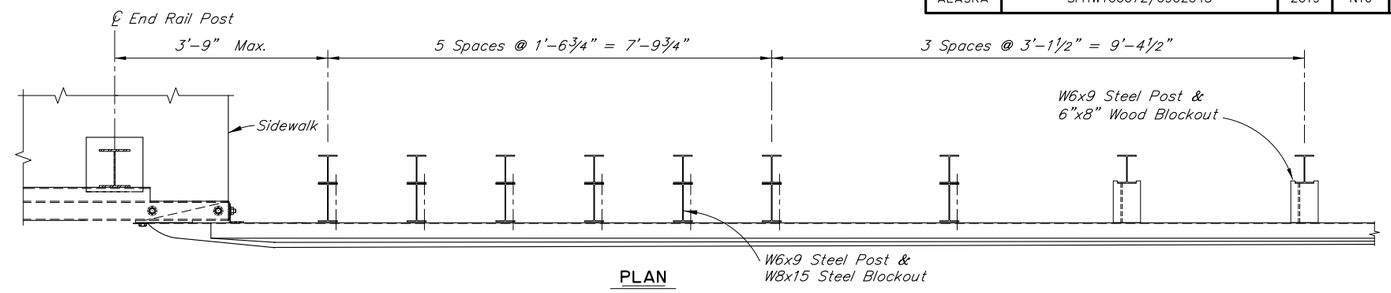

PLAN

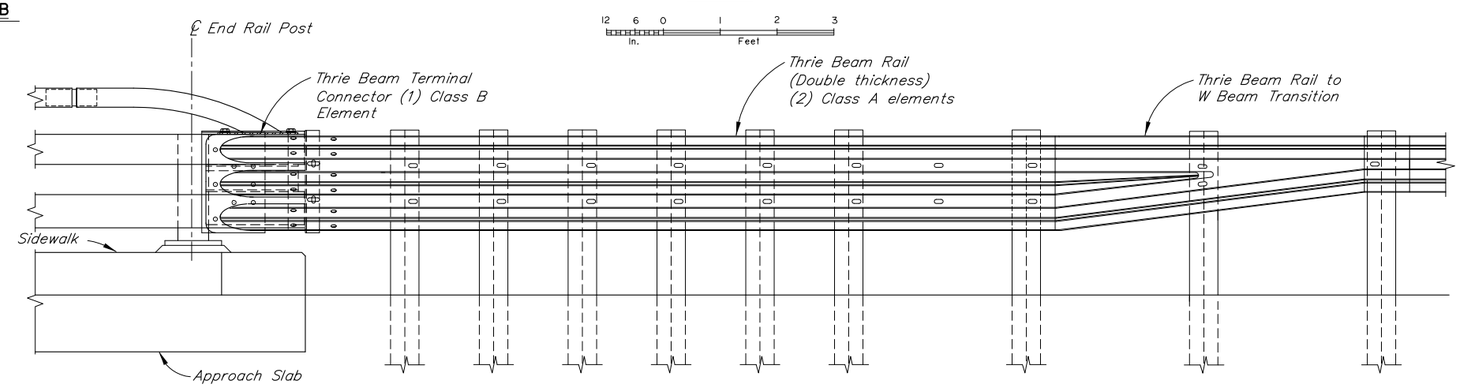

ELEVATION

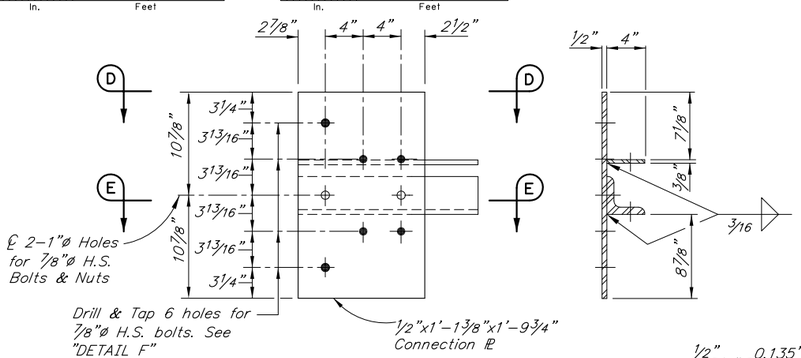

GUARDRAIL CONNECTION PLATE DETAILS

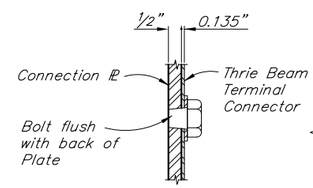

DETAIL F

No Scale

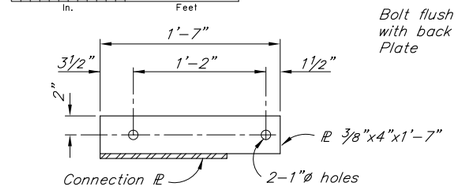

VIEW D-D

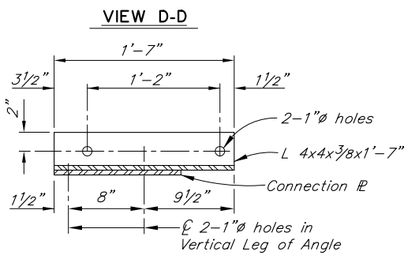

SECTION E-E

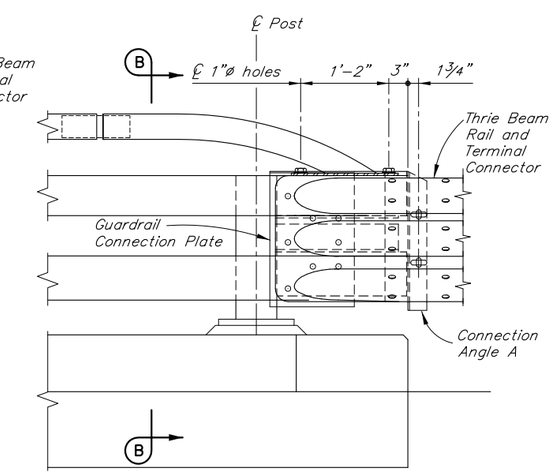

THRIE BEAM CONNECTION

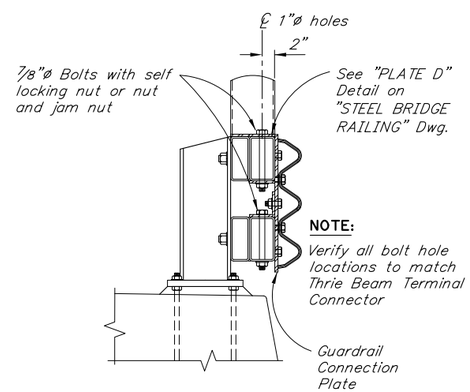

NOTE:

Verify all bolt hole locations to match Thrie Beam Terminal Connector

SECTION B-B

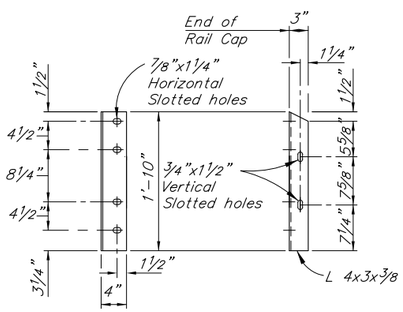

CONNECTION ANGLE A

NOTES:

1. Conform to G-00, G-04S, G-10 and G-31 for all guardrail details not shown.
2. Lap approach guardrail to prevent snags from oncoming traffic.
3. Provide 4½" horizontal slots in approach guardrail. Adjust guardrail bolts for sliding fit.

DRAFT

DESIGNED BY: Elmer Marx	CHECKED: Checker	STATE OF ALASKA DEPARTMENT OF TRANSPORTATION AND PUBLIC FACILITIES BRIDGE SECTION 3132 Channel Drive Juneau, Alaska 99801 907-465-2975	HERRING COVE BRIDGE SOUTH TONGASS HIGHWAY THRIE BEAM TRANSITION RAILING
DRAWN BY: Sam Sollie	CHECKED: Elmer Marx		BRIDGE NO. 253
QUANTITIES BY: Elmer Marx	CHECKED: Checker		DWG. NO. 16

R:\cad\253\253-1-TRANSTION Wed, Oct/03/18 01:28pm