Attachment 5

Appendix E

ADOT&PF Railroad Crossing Certification Flow Chart & Checklist

MEMORANDUM

STATE OF ALASKA

Department of Transportation and Public Facilities
Central Region-Division of Design and Engineering Services
Highway Design Section

To: **Design Chiefs and Project Managers** 16-7044

Thru: **Ken Morton, P.E.**
Regional Preconstruction Engineer

Date: July 20, 2015

Thru: **Jim Amundsen, P.E.**, Chief
Highway Design Section

From: **Scott E. Thomas, P.E.**
Central Region Traffic & Safety Engineer

Subject: Railroad Crossing Certification

Attached are design checklists to verify all road design projects affecting railroad crossings address the mandatory conditions of the Alaska Traffic Manual before advertising the project.

1. Include draft forms filled out at the time of Plans-In-Hand and DSR review. The Design Engineer or Engineering Manager is responsible for the forms and field review.

2. Finalize and sign the forms by Final PSE.

3. Provide an electronic copy of the completed Engineer's Checklist to the Regional Traffic & Safety Engineer's office and the ARRC Engineer's office for filing in each agency's railroad crossing files.

4. Route a completed hardcopy Railroad Crossing Engineer's Checklist along with the standard Project Certification Sheet per Section 470.3 if the Highway Preconstruction Manual before Advertising the project. The Project Certification Sheet is the final certification of Railroad crossing coordination and compliance with standards.

If you have any questions, contact Larry Huling, Engineering Assistant, at 269-0637. Larry maintains our railroad crossing inventory and has diligently prepared these checklists to improve the railroad certification process.

Attachments:

Railroad Crossing Certification Flow Chart
Railroad Crossing Certification Checklist

Additional Guidance:

www.fhwa.dot.gov/federal-aidessentials
(Railroad Coordination and Certification Requirements – pdf and video)

Distribution:

Joel St. Aubin, P.E., Director, Construction & Operations
Tom Dougherty, P.E., Chief of Construction
Tony Sprague, P.E., Chief, Highway Construction
Michael San Angelo, P.E., Chief, Statewide Materials, HQ
Mark Neidhold, P.E., Chief Engineer, Statewide D&ES, HQ

Distribution:
James Amundsen, P.E., Chief Highway Design
- Sean Baski, P.E., Project Manager
- Cynthia Ferguson, P.E., Project Manager
- Kevin Jackson, P.E., Project Manager
- Christina Huber, P.E., Project Manager
- Chris Post, P.E., Project Manager
- Sean Holland, P.E., Project Manager
- Carla Smith, P.E., Project Manager

Eric Miyashiro, P.E., Chief, Preliminary Design & Environmental
- Tom Schmid, P.E., Project Manager
- Kelly Petersen, P.E., Project Manager
- Gerald Welsh, P.E., Project Manager

Wolfgang Junge, P.E., Chief Aviation Design
- Morgan Merritt, P.E., Project Manager
- Luke Bowland, P.E., Project Manager
- Barbara Beaton, P.E., Project Manager
- Aaron Hughes, P.E., Project Manager

Scott Thomas, P.E., Regional Traffic & Safety Engineer
- Jon Knowles, P.E., HSIP Coordinator
- Chris Bentz, P.E., Traffic Design Engineer
- Larry Huling, Railroad Inventory, Engineering Assistant

AT-GRADE RAILROAD CROSSING CERTIFICATION PROCESS

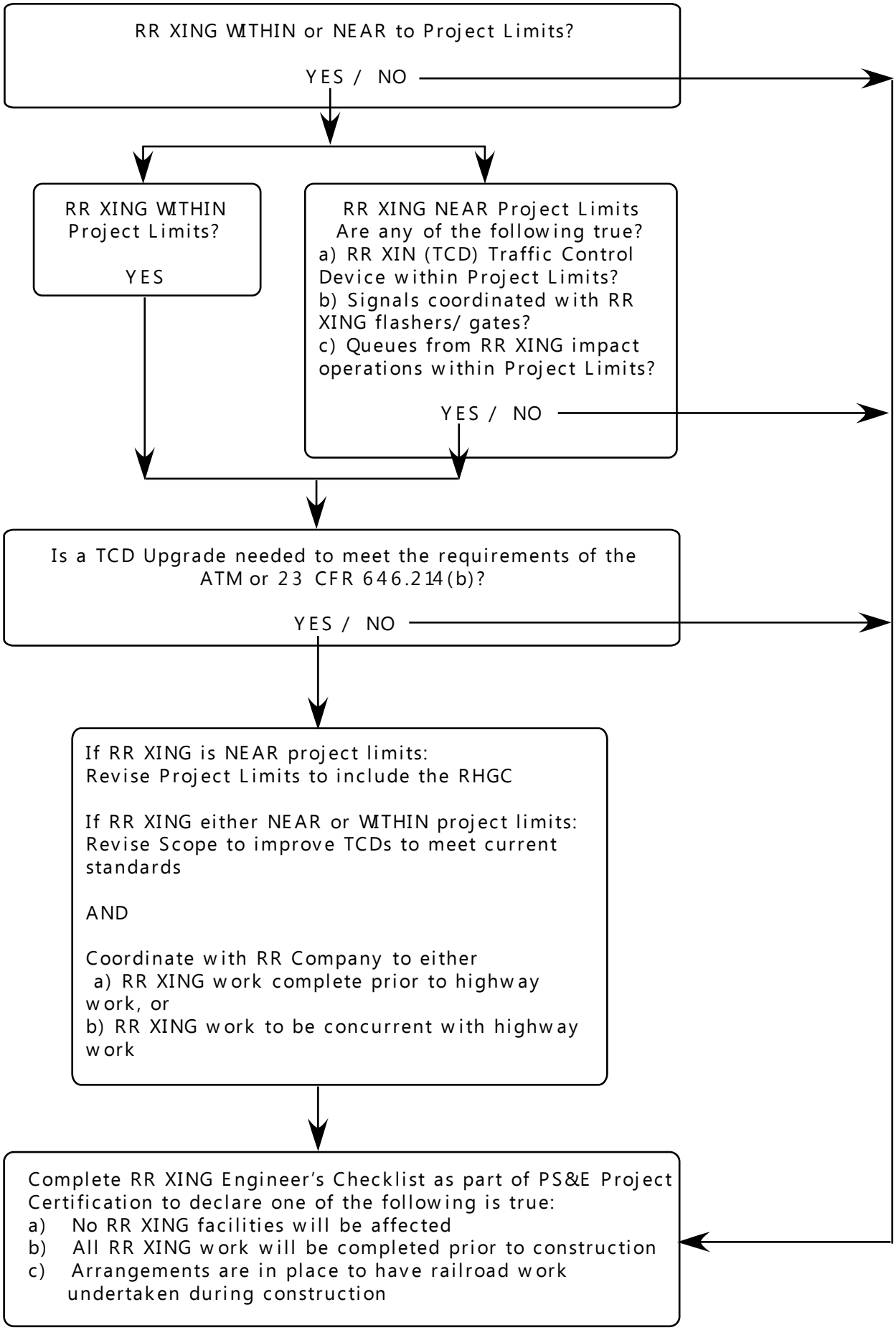

State of Alaska
Department of Transportation and Public Facilities

RAILROAD CROSSING ENGINEER'S CHECKLIST

RR MP Road name Road MP Cross Street/Intersection Dist From:

Federal Crossing # Nearest Community Max Train Speed Roadway Posted Speed

Road Ownership Location notes:

PROJECT	Name	State#	Federal#

☐ **NO RAILROAD CROSSINGS ARE AFFECTED BY THIS ROAD PROJECT.**

OR **SELECT THE SCHEDULE OF WORK FOR THE AFFECTED RAILROAD CROSSING:**

☐ **All crossing devices work will be completed before road work begins.**

☐ **Crossing devices work will be concurrent with road work. Railroad notified.**

CHECK FORMS APPLICABLE TO EACH CROSSING AND ATTACH THEM

1 ☐ **SIGHT DISTANCE TRIANGLES: All Locations**
See ADVANCE WARNING SIGNS page. ALWAYS ATTACH. Form 1.

2 ☐ **ADVANCE WARNING SIGNS: All Locations**
See ADVANCE WARNING SIGNS page. ALWAYS ATTACH. Form 2.

3 ☐ **PASSIVE DEVICES: Signs & Markings Only**
See PASSIVE DEVICES page. Attach if no lights or gates at this crossing. Form 3.

4 ☐ **ACTIVE DEVICES: Flashing Lights & Gates**
See ACTIVE DEVICES page. Attach if there are lights or gates. Form 4.

5 ☐ **PAVEMENT MARKINGS: 40 MPH or greater**
See PAVEMENT MARKINGS page. Attach only where markings used. Form 5.

6 ☐ **PATHWAY SIGNS or MARKINGS**
See PATHWAY page. Attach if path signs and/or markings used. Form 6.

Field inspected by:

On this date: / / (Month Day Year)

Engineer's Approval:
X (Printed name)

Date: / /

Notes: This form compiled from ATM & 2009 MUTCD requirements by Traffic & Safety in 2015. This list does NOT address Temporary Traffic Control. All references are to sections of the 2009 MUTCD and the Alaska Traffic Manual Supplement (ATM).

Version: 7/20/15 **(3) Copies, 1 Ea. TO: Regional Traffic & Safety Engineer, Regional Utilities Engineer, Alaska Railroad Corp. Chief Engineer**

SIGHT TRIANGLES

Is a Diagnostic Team (DT) Review on file? Yes No (ask Traffic & Safety)

Roadway Posted Speed ☐ **Maximum Approved Train Speed** ☐

See following page 'Sight Distance Table' for value of **dhm**, then:
Measure sight triangle from road shoulder, or Edge of Traveled Way, to Nearest Rail, using a hand held laser or range finder.
See 'Sight Distance Tables' page for **dts, dhm**.

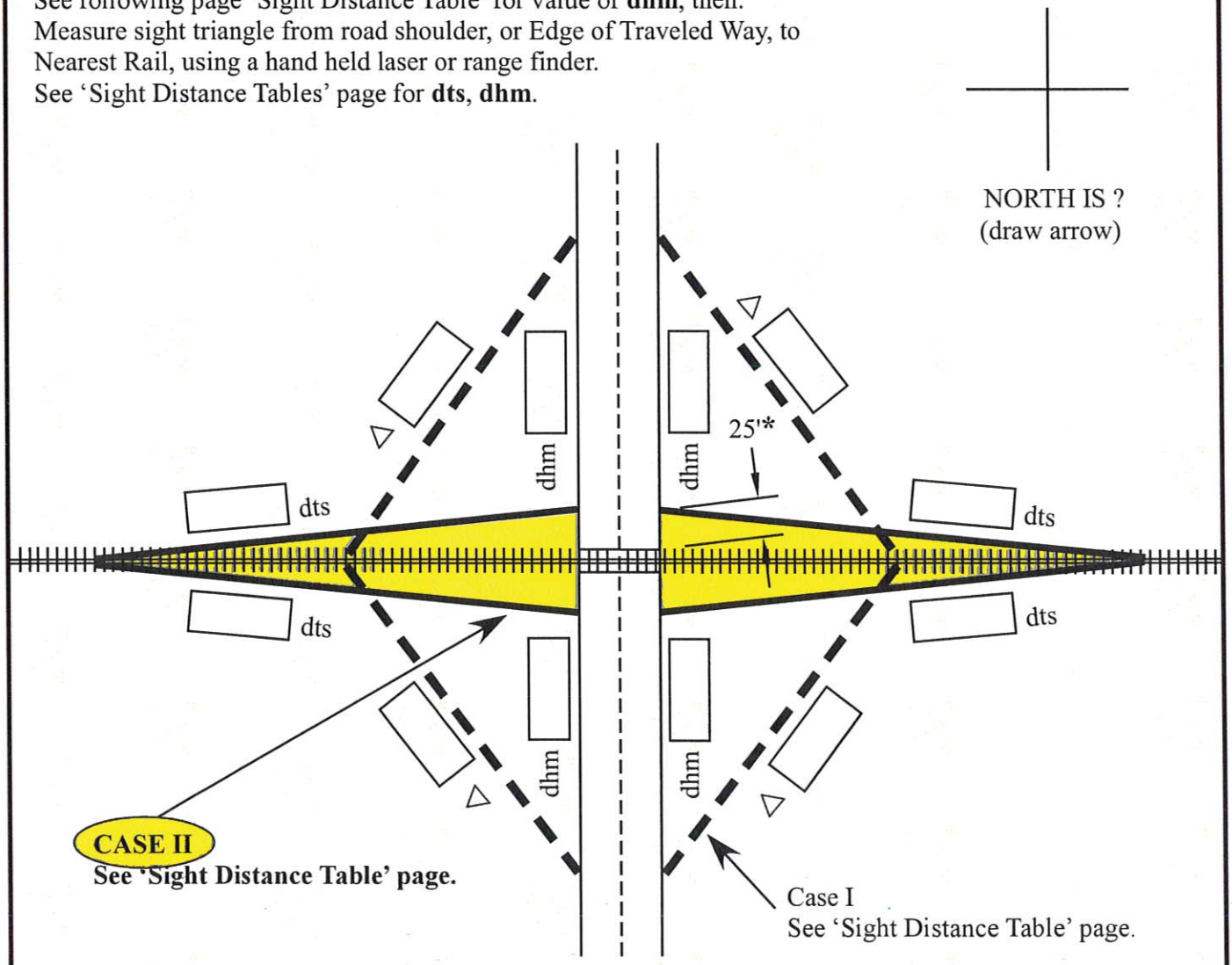

*25 ft. = Stopped Condition for motorist, measured from the nearest rail. This will normally be 10 ft. back from the STOP bar or the Crossbuck Sign.

All distances in feet.
DO NOT WALK along tracks or measure along RR Right of Way.
ALL measurements can be taken from road shoulder.

SIGHT DISTANCE TABLE

SIGHT DISTANCE TRIANGLE TABLES Based on the Alaska Policy on Railroad / Highway Crossings 1988

All distances in FEET.

dts Sight Required (ft) - CASE II

TRAIN SPEED (mph)	5	10	15	20	25	30	35	40	45	50	55	60
dts	120	240	360	480	600	720	840	960	1080	1200	1320	1440

dts Distance along tracks when vehicle is stopped, 25' from the nearest track (STOP, YIELD, or stop bar at gate/flashers).

Sight Distance Required (ft) - CASE I

ROAD*	dhm Distance along Highway from Track to Measure From (ft)														
SPEED	0	5	10	15	20	25	30	35	40	45	50	55	60	65	70
dhm	25	45	70	100	135	175	225	275	340	410	490	565	660	750	865

*ROAD SPEED is the Roadway's Posted Speed Limit

dhm Distance along highway (from crossing) when both vehicle and train are moving.

Sight△ Required (ft) - CASE I

TRAIN SPEED (mph)	ROAD POSTED SPEED (mph)													
	5	10	15	20	25	30	35	40	45	50	55	60	65	70
5	140	110	120	150	190	240	280	350	420	500	570	670	760	870
10	250	170	160	180	210	250	300	360	430	510	580	680	770	880
15	370	240	210	210	240	280	320	380	450	520	600	690	780	890
20	490	300	260	250	270	310	350	400	470	540	620	710	800	910
25	610	380	310	300	310	340	380	430	500	570	640	730	820	930
30	730	450	370	340	350	380	410	470	530	600	670	760	850	960
35	850	520	430	390	390	420	450	500	560	630	700	790	880	990
40	970	590	480	440	440	460	490	540	600	670	740	830	910	1020
45	1090	660	540	490	480	500	530	580	640	710	780	870	950	1060
50	1210	730	590	540	530	550	580	630	680	750	810	910	990	1100
55	1330	810	650	590	580	590	620	670	720	800	860	950	1030	1140
60	1450	880	710	640	630	640	670	710	770	840	900	990	1080	1190

Sight Triangle Definitions

Case I: Both vehicle and train moving at maximum speed. (Vehicle at Posted Speed Limit, train at Max Approved Speed.)

Case II: Vehicle stopped at crossing, and train moving at Max Approved Speed.

Case I is required for ungated, unsignalized crossings. If Case I cannot be achieved, STOP signs are required, and Case II sight distance is required.

Case II is required for ALL crossings, except for industrial areas where it is physically impossible.

ADVANCE WARNING SIGNS

TYPICALLY REQUIRED

See the bottom of this page for the few exceptions to using Railroad Advance Warning Signs.

	bound	bound	ROAD APPROACH DIRECTION
			Checklist:
8B.06 AK Policy			**Advance warning sign (W10-1), the railroad Roundel, used unless adjacent parallel roadway is less than 100 ft away;**
8B.06			**THEN use W10-2, 3 or 4 series warning sign, with the correct;**
8B.06			**W10-11 series distance sign on the same post. These are always used with the W10-2, 3 or 4 signs**
Std.Dwg S-30.03			**Frangible post base, or maximum of 2.5" PST post**
8B.21			**No train horn sign if in a Quiet Zone, ARR MP 104 to 114, (Oceanview Dr. to 30th Ave.)**
8B.28 AK Policy			**Low grade clearance (graphic) sign (and text sign for 3 years), if crossing vertical profile could hang up long vehicles**
8B.06			**Advance warning sign(s) placed sufficiently in advance, see Table 2C-4, attached**
8B.10			**Tracks out of service sign, for tracks that are not in use, but not removed from roadway**
8C.12			**If a roundabout is within 200 ft, was a design study done, to review queuing to the tracks?**

W10-1

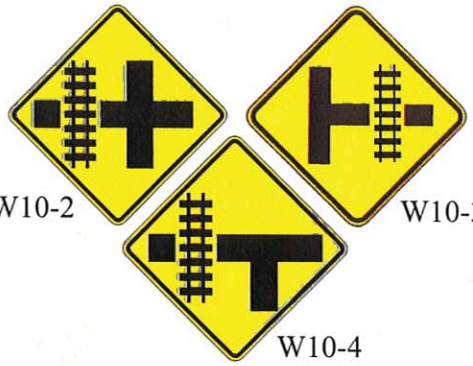
W10-2 W10-3 W10-4

W10-9P

W10-11a

W10-5

W10-5P

R8-9

W10-series, Railroad Advance Warning Signs may ONLY be omitted:
1) On low-speed low-volume roads where users are advised by personnel on the ground when not to enter the crossing,
2) In business or commercial areas where active devices are in use,
3) Or where physical conditions do not permit an even partially effective display of the signs.

All references are to the ATM & 2009 Manual on Uniform Traffic Control Devices.

06 Signs and plaques larger than those shown in Tables 2C-2 and 2C-3 may be used (see Section 2A.11).

Guidance:

07 *The minimum size for all diamond-shaped warning signs facing traffic on exit and entrance ramps should be the size identified in Table 2C-2 for the mainline roadway classification (Expressway or Freeway). If a minimum size is not provided in the Freeway Column, the Expressway size should be used. If a minimum size is not provided in the Freeway or the Expressway Column, the Oversized size should be used.*

Section 2C.05 Placement of Warning Signs

Support:

01 For information on placement of warning signs, see Sections 2A.16 to 2A.21.

02 The time needed for detection, recognition, decision, and reaction is called the Perception-Response Time (PRT). Table 2C-4 is provided as an aid for determining warning sign location. The distances shown in Table 2C-4 can be adjusted for roadway features, other signing, and to improve visibility.

Guidance:

03 *Warning signs should be placed so that they provide an adequate PRT. The distances contained in Table 2C-4 are for guidance purposes and should be applied with engineering judgment. Warning signs should not be placed too far in advance of the condition, such that drivers might tend to forget the warning because of other driving distractions, especially in urban areas.*

Table 2C-4. Guidelines for Advance Placement of Warning Signs

Posted or 85th-Percentile Speed	Advance Placement Distance[1]								
	Condition A: Speed reduction and lane changing in heavy traffic[2]	Condition B: Deceleration to the listed advisory speed (mph) for the condition							
		0[3]	10[4]	20[4]	30[4]	40[4]	50[4]	60[4]	70[4]
20 mph	225 ft	100 ft[6]	N/A[5]	—	—	—	—	—	—
25 mph	325 ft	100 ft[6]	N/A[5]	N/A[5]	—	—	—	—	—
30 mph	460 ft	100 ft[6]	N/A[5]	N/A[5]	—	—	—	—	—
35 mph	565 ft	100 ft[6]	N/A[5]	N/A[5]	N/A[5]	—	—	—	—
40 mph	670 ft	125 ft	100 ft[6]	100 ft[6]	N/A[5]	—	—	—	—
45 mph	775 ft	175 ft	125 ft	100 ft[6]	100 ft[6]	N/A[5]	—	—	—
50 mph	885 ft	250 ft	200 ft	175 ft	125 ft	100 ft[6]	—	—	—
55 mph	990 ft	325 ft	275 ft	225 ft	200 ft	125 ft	N/A[5]	—	—
60 mph	1,100 ft	400 ft	350 ft	325 ft	275 ft	200 ft	100 ft[6]	—	—
65 mph	1,200 ft	475 ft	450 ft	400 ft	350 ft	275 ft	200 ft	100 ft[6]	—
70 mph	1,250 ft	550 ft	525 ft	500 ft	450 ft	375 ft	275 ft	150 ft	—
75 mph	1,350 ft	650 ft	625 ft	600 ft	550 ft	475 ft	375 ft	250 ft	100 ft[6]

[1] The distances are adjusted for a sign legibility distance of 180 feet for Condition A. The distances for Condition B have been adjusted for a sign legibility distance of 250 feet, which is appropriate for an alignment warning symbol sign. For Conditions A and B, warning signs with less than 6-inch legend or more than four words, a minimum of 100 feet should be added to the advance placement distance to provide adequate legibility of the warning sign.

[2] Typical conditions are locations where the road user must use extra time to adjust speed and change lanes in heavy traffic because of a complex driving situation. Typical signs are Merge and Right Lane Ends. The distances are determined by providing the driver a PRT of 14.0 to 14.5 seconds for vehicle maneuvers (2005 AASHTO Policy, Exhibit 3-3, Decision Sight Distance, Avoidance Maneuver E) minus the legibility distance of 180 feet for the appropriate sign.

[3] Typical condition is the warning of a potential stop situation. Typical signs are Stop Ahead, Yield Ahead, Signal Ahead, and Intersection Warning signs. The distances are based on the 2005 AASHTO Policy, Exhibit 3-1, Stopping Sight Distance, providing a PRT of 2.5 seconds, a deceleration rate of 11.2 feet/second^2, minus the sign legibility distance of 180 feet.

[4] Typical conditions are locations where the road user must decrease speed to maneuver through the warned condition. Typical signs are Turn, Curve, Reverse Turn, or Reverse Curve. The distance is determined by providing a 2.5 second PRT, a vehicle deceleration rate of 10 feet/second^2, minus the sign legibility distance of 250 feet.

[5] No suggested distances are provided for these speeds, as the placement location is dependent on site conditions and other signing. An alignment warning sign may be placed anywhere from the point of curvature up to 100 feet in advance of the curve. However, the alignment warning sign should be installed in advance of the curve and at least 100 feet from any other signs.

[6] The minimum advance placement distance is listed as 100 feet to provide adequate spacing between signs.

PASSIVE DEVICES
Signs & Markings Only

	ROAD APPROACH DIRECTION: North bound	ROAD APPROACH DIRECTION: South bound	Checklist:
8B.03 AK Policy	☐	☐	Railroad Crossbuck sign, retroreflective front & min. 6" wide strip, full length on back, or back to back Crossbuck signs
8B.03 8B.04	☐	☐	Number of tracks sign, if more than 1 set of tracks
8B.04 AK Policy	☐	☐	YIELD (default) or STOP sign (circle one)
8B.03 8B.04 8B.06	☐	☐	2" retroreflective strip on front and back of sign post
8A.04	☐	☐	Frangible post base, or maximum of 2.5" PST
	☐	☐	2 Ft. horizontal clearance from signs, for pedestrians?
8B.03 8B.04	☐	☐	2nd Crossbuck sign on left, if visibility is restricted on right
Fig. 8B-2 8B.04	☐	☐	4' minimum to bottom sign, 5' min. if on separate post, 7' min. with pedestrians
8B.04 8B.06	☐	☐	YIELD or STOP AHEAD sign, if visibility of YIELD or STOP sign is restricted, such that a driver does not have sufficient time to respond to the primary sign
8B.02	☐	☐	Sign sizes meet or exceed the Table in 8B-1, attached
8A.04	☐	☐	All signs retroreflective

R15-1

R15-2P

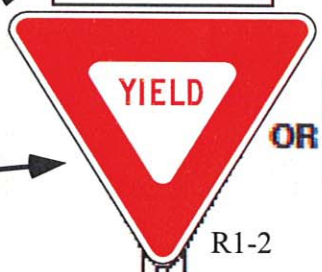

R1-2

OR

R1-1

Must use STOP sign at unmaintained crossings that the public can access (Pub-4). Must use STOP sign at crossings without Case I Sight Distance, unless other mitigation is in place.

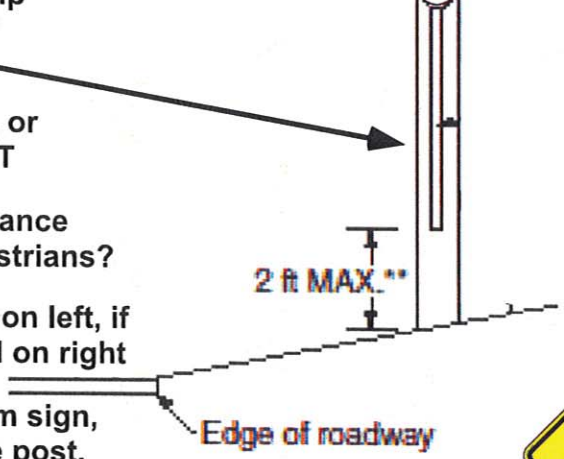

W3-1a

W3-2a

All references are to the ATM & 2009 Manual on Uniform Traffic Control Devices.

Table 8B-1. Grade Crossing Sign and Plaque Minimum Sizes

Sign or Plaque	Sign Designation	Section	Conventional Road		Expressway	Minimum	Oversized
			Single Lane	Multi-Lane			
Stop	R1-1	8B.04, 8B.05	30 x 30	36 x 36	36 x 36	—	48 x 48
Yield	R1-2	8B.04, 8B.05	36 x 36 x 36	36x36x36 ~~48 x 48 x 48~~	48 x 48 x 48	30 x 30 x 30	—
No Right Turn Across Tracks	R3-1a	8B.08	24 x 30	30 x 36	—	—	—
No Left Turn Across Tracks	R3-2a	8B.08	24 x 30	30 x 36	—	—	—
Do Not Stop on Tracks	R8-8	8B.09	24 x 30	24 x 30	36 x 48	—	36 x 48
Tracks Out of Service	R8-9	8B.10	24 x 24	24 x 24	36 x 36	—	36 x 36
Stop Here When Flashing	R8-10	8B.11	24 x 36	24 x 36	—	—	36 x 48
Stop Here When Flashing	R8-10a	8B.11	24 x 30	24 x 30	—	—	36 x 42
Stop Here on Red	R10-6	8B.12	24 x 36	24 x 36	—	—	36 x 48
Stop Here on Red	R10-6a	8B.12	24 x 30	24 x 30	—	—	36 x 42
Grade Crossing (Crossbuck)	R15-1	8B.03	48 x 9	48 x 9	—	—	—
Number of Tracks (plaque)	R15-2P	8B.03	27 x 18	27 x 18	—	—	—
Exempt (plaque)	R15-3P	8B.07	24 x 12	24 x 12	—	—	—
Light Rail Only Right Lane	R15-4a	8B.13	24 x 30	24 x 30	—	—	—
Light Rail Only Left Lane	R15-4b	8B.13	24 x 30	24 x 30	—	—	—
Light Rail Only Center Lane	R15-4c	8B.13	24 x 30	24 x 30	—	—	—
Light Rail Do Not Pass	R15-5	8B.14	24 x 30	24 x 30	—	—	—
Do Not Pass Stopped Train	R15-5a	8B.14	24 x 30	24 x 30	—	—	—
No Motor Vehicles On Tracks Symbol	R15-6	8B.15	24 x 24	24 x 24	—	—	—
Do Not Drive On Tracks	R15-6a	8B.15	24 x 30	24 x 30	—	—	—
Light Rail Divided Highway Symbol	R15-7	8B.16	24 x 24	24 x 24	—	—	—
Light Rail Divided Highway Symbol (T-Intersection)	R15-7a	8B.16	24 x 24	24 x 24	—	—	—
Look	R15-8	8B.17	36 x 18	36 x 18	—	—	—
Grade Crossing Advance Warning	W10-1	8B.06	36 Dia.	36 Dia.	48 Dia.	—	48 Dia.
Exempt (plaque)	W10-1aP	8B.07	24 x 12	24 x 12	—	—	—
Grade Crossing and Intersection Advance Warning	W10-2,3,4	8B.06	36 x 36	36 x 36	48 x 48	—	48 x 48
Low Ground Clearance	W10-5	8B.23	36 x 36	36 x 36	48 x 48	—	48 x 48
Low Ground Clearance (plaque)	W10-5P	8B.23	30 x 24	30 x 24	—	—	—
Light Rail Activated Blank-Out Symbol	W10-7	8B.19	24 x 24	24 x 24	—	—	—
Trains May Exceed 80 MPH	W10-8	8B.20	36 x 36	36 x 36	48 x 48	—	48 x 48
No Train Horn	W10-9	8B.21	36 x 36	36 x 36	48 x 48	—	48 x 48
No Train Horn (plaque)	W10-9P	8B.21	30 x 24	30 x 24	—	—	—
Storage Space Symbol	W10-11	8B.24	36 x 36	36 x 36	48 x 48	—	48 x 48
Storage Space XX Feet Between Tracks & Highway	W10-11a	8B.24	30 x 36	30 x 36	—	—	—
Storage Space XX Feet Between Highway & Tracks Behind You	W10-11b	8B.24	30 x 36	30 x 36	—	—	—
Skewed Crossing	W10-12	8B.25	36 x 36	36 x 36	48 x 48	—	48 x 48
No Gates or Lights (plaque)	W10-13P	8B.22	30 x 24	30 x 24	—	—	—
Next Crossing (plaque)	W10-14P	8B.23	30 x 24	30 x 24	—	—	—
Use Next Crossing (plaque)	W10-14aP	8B.23	30 x 24	30 x 24	—	—	—
Rough Crossing (plaque)	W10-15P	8B.23	30 x 24	30 x 24	—	—	36 x 30

2012 ATM

Notes: 1. Larger signs may be used when appropriate
2. Dimensions in inches are shown as width x height
3. Table 9B-1 shows the minimum sizes that may be used for grade crossing signs and plaques that face shared-use paths and pedestrian facilities

ACTIVE DEVICES
Flashing Lights & Gates

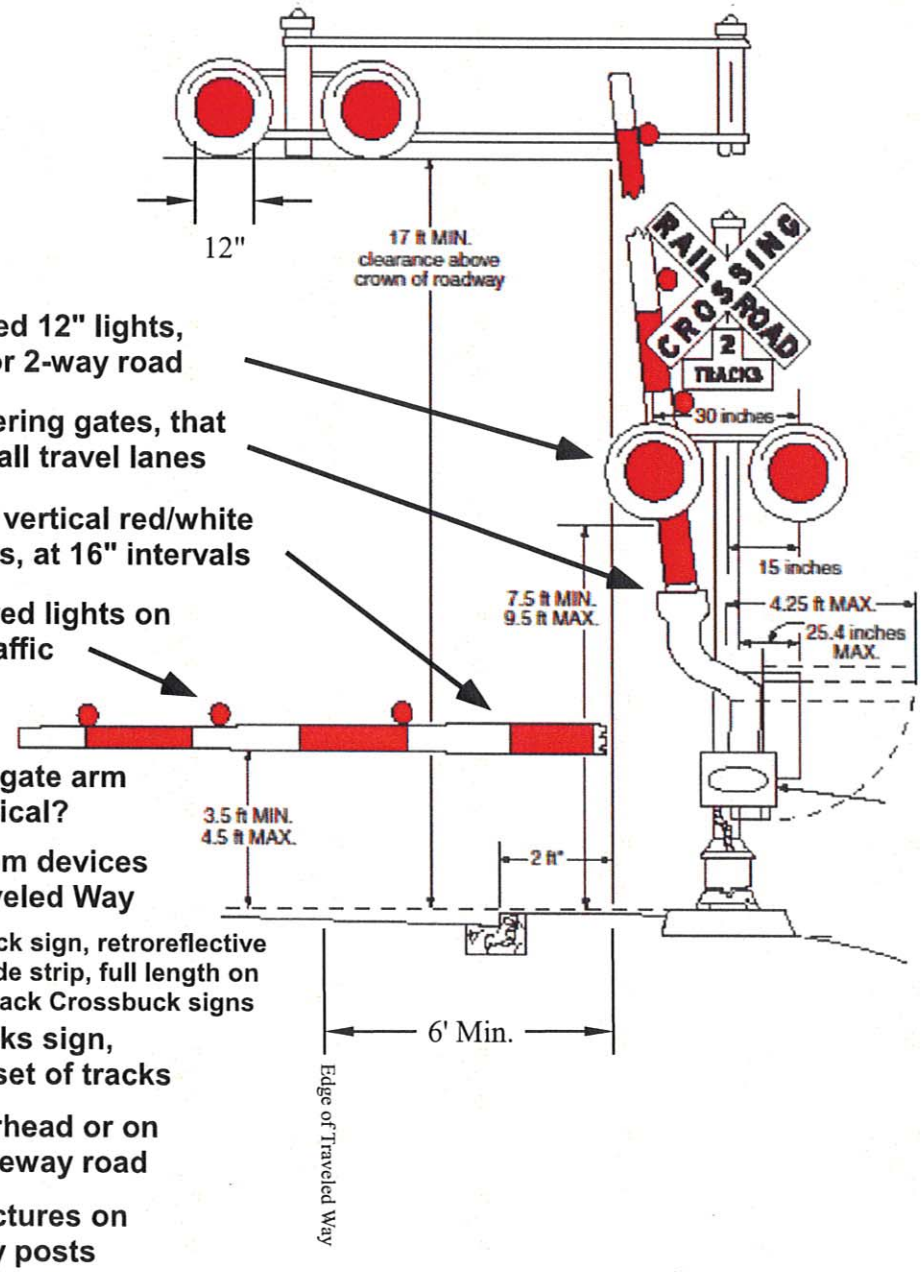

	bound	bound	Checklist:
			ROAD APPROACH DIRECTION →
8C.04	☐	☐	Dual flashing red 12" lights, back to back for 2-way road
8C.04	☐	☐	Automatic lowering gates, that extend across all travel lanes
8C.04	☐	☐	Retroreflective vertical red/white stripes on gates, at 16" intervals
8C.04	☐	☐	Minimum of 3 red lights on gates facing traffic
8C.04	☐	☐	Does lowering gate arm rest nearly vertical?
	☐	☐	6' minimum from devices to Edge of Traveled Way
8B.03 8C.02	☐	☐	Railroad Crossbuck sign, retroreflective front & min. 6" wide strip, full length on back, or back to back Crossbuck signs
8C.01	☐	☐	Number of tracks sign, if more than 1 set of tracks
8C.02	☐	☐	Red lights overhead or on left side for Oneway road
8C.02	☐	☐	Overhead structures on non-breakaway posts
8B.18	☐	☐	Emergency notification sign present
8C.06	☐	☐	4 quadrant gate system used where vehicles may try to short-cut through the gates?
8C.06	☐	☐	Median barriers used between the lanes for the same reason?

All references are to the ATM & 2009 Manual on Uniform Traffic Control Devices.

PAVEMENT MARKINGS

	North bound	South bound	ROAD APPROACH DIRECTION

Checklist:

	North bound	South bound	
8B.28	☐	☐	Stop Bar, at approx. 8' from gate
8B.28	☐	☐	OR approx. 15' from edge of track
8B.27	☐	☐	NO PASSING ZONE striping between "X" and tracks
8B.27	☐	☐	All markings are ret-roreflective

	North bound	South bound	ROAD APPROACH DIRECTION
8B.27	☐	☐	Elongated X marking in roadway
8B.27	☐	☐	Elongated X and lines dimensions appear correct, per Figure 8B-7, attached
8B.06	☐	☐	Advance warning sign & Elongated "X" adjacent to each other
8B.27	☐	☐	Identical markings on all approach lanes

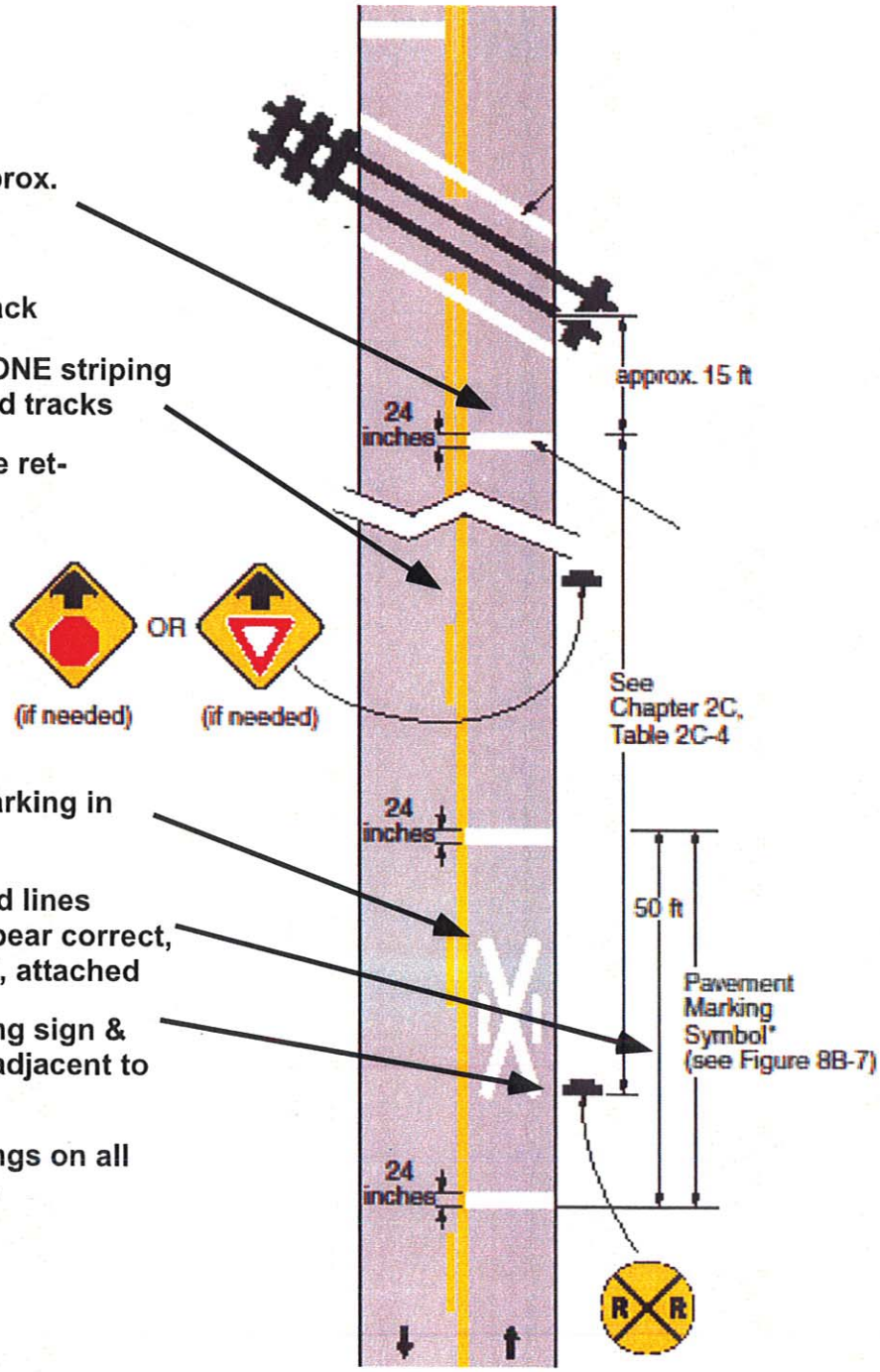

All references are to the ATM and 2009 Manual on Uniform Traffic Control Devices.

COPY

Figure 8B-7. Grade Crossing Pavement Markings

A - Grade crossing pavement marking symbol

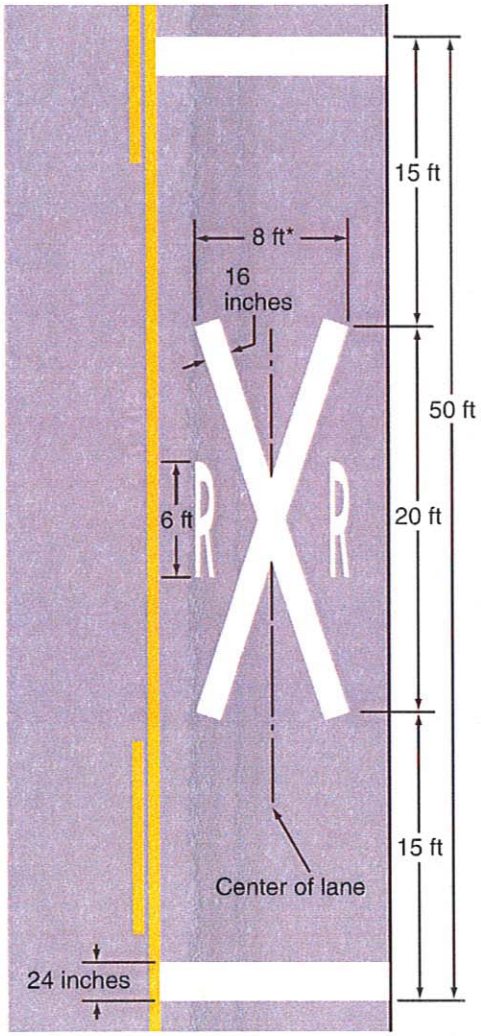

*Width may vary according to lane width

B - Grade crossing alternative (narrow) pavement marking symbol

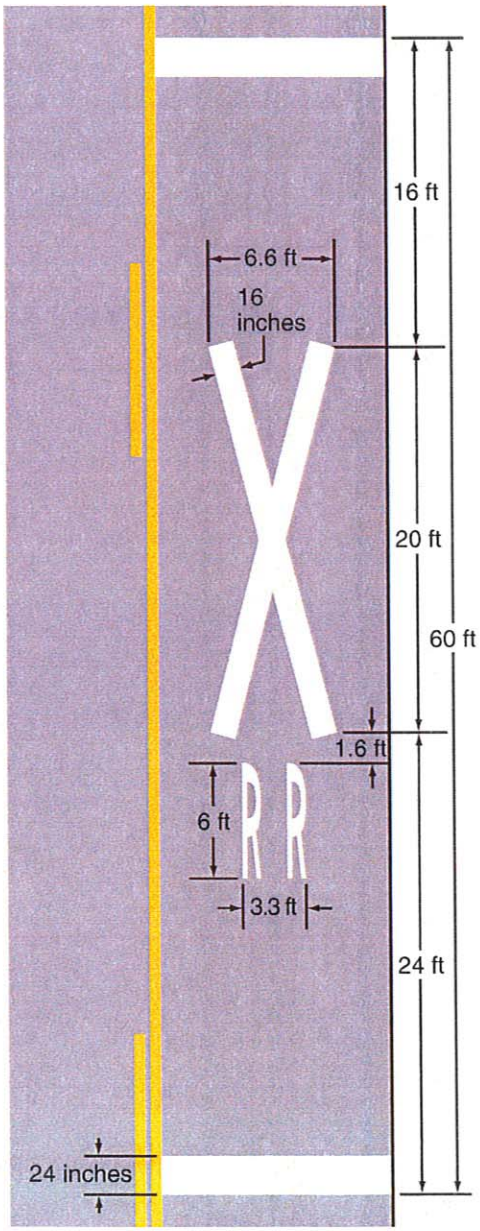

Note: Refer to Figure 8B-6 for placement

Section 8B.28 Stop and Yield Lines

Standard:

01 **On paved roadways at grade crossings that are equipped with active control devices such as flashing-light signals, gates, or traffic control signals, a stop line (see Section 3B.16) shall be installed to indicate the point behind which highway vehicles are or might be required to stop.**

Guidance:

02 *On paved roadway approaches to passive grade crossings where a STOP sign is installed in conjunction with the Crossbuck sign, a stop line should be installed to indicate the point behind which highway vehicles are required to stop or as near to that point as practical.*

03 *If a stop line is used, it should be a transverse line at a right angle to the traveled way and should be placed approximately 8 feet in advance of the gate (if present), but no closer than 15 feet in advance of the nearest rail.*

PATHWAY GRADE CROSSINGS
25 Ft or further from a Road Crossing

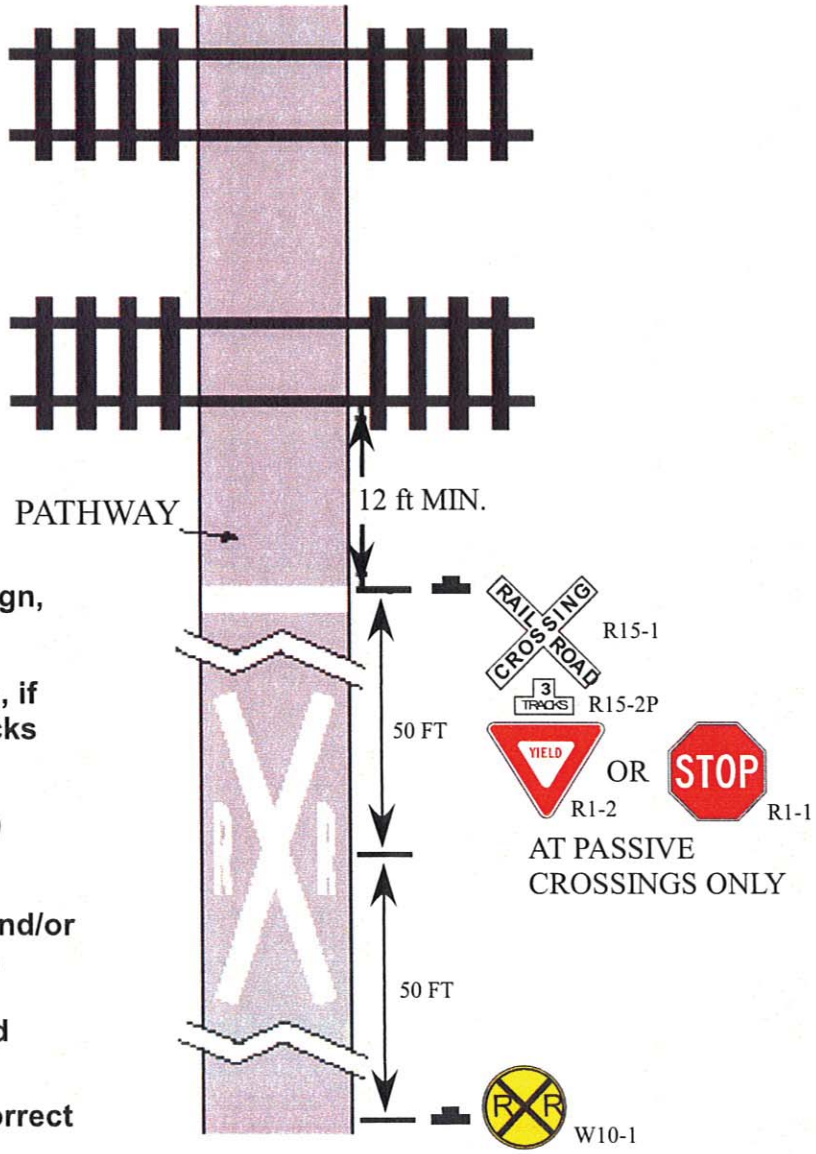

ROAD APPROACH DIRECTION

	bound	bound	Checklist:
8D.03	☐	☐	Stop Bar, at approx. 12' from near track
8D.05	☐	☐	Railroad Crossbuck sign, reflective front & back
8B.04	☐	☐	Number of tracks Sign, if more than 1 set of tracks
8B.04	☐	☐	YIELD (default) or STOP sign (circle one)
8D.03	☐	☐	Consider elongated X marking in pathway, and/or advance warning sign (W10-1), if high-speed users can be expected
8D.03	☐	☐	Elongated X and line dimensions appear correct
8D.03	☐	☐	Advance warning sign at beginning of Elongated X
8D.03	☐	☐	4 ft. minimum mounting height to base of signs?
8D.03	☐	☐	2 ft. minimum clearance to the edge of all signs, that are shorter than 8 ft?
8D.03	☐	☐	All sign appropriate size? See Table 9B-1, attached.

All references are to the ATM and 2009 Manual on Uniform Traffic Control Devices.

COPY

Table 9B-1. Bicycle Facility Sign and Plaque Minimum Sizes (Sheet 1 of 2)

Sign or Plaque	Sign Designation	Section	Shared-Use Path	Roadway
Stop	R1-1	2B.05, 9B.03	18 x 18	30 x 30
Yield	R1-2	2B.08, 9B.03	18 x 18 x 18	30 x 30 x 30
Bike Lane	R3-17	9B.04	—	24 x 18
Bike Lane (plaques)	R3-17aP, R3-17bP	9B.04	—	24 x 8
Movement Restriction	R4-1,2,3,7,16	2B.28,29,30,32; 9B.14	12 x 18	18 x 24
Begin Right Turn Lane Yield to Bikes	R4-4	9B.05	—	36 x 30
Bicycles May Use Full Lane	R4-11	9B.06	—	30 x 30
Bicycle Wrong Way	R5-1b	9B.07	12 x 18	12 x 18
No Motor Vehicles	R5-3	9B.08	24 x 24	24 x 24
No Bicycles	R5-6	9B.09	18 x 18	24 x 24
No Parking Bike Lane	R7-9,9a	9B.10	—	12 x 18
No Pedestrians	R9-3	9B.09	18 x 18	18 x 18
Ride With Traffic (plaque)	R9-3cP	9B.07	12 x 12	12 x 12
Bicycle Regulatory	R9-5,6	9B.11	12 x 18	12 x 18
Shared-Use Path Restriction	R9-7	9B.12	12 x 18	—
No Skaters	R9-13	9B.09	18 x 18	18 x 18
No Equestrians	R9-14	9B.09	18 x 18	18 x 18
Push Button for Green Light	R10-4	9B.11	9 x 12	9 x 12
To Request Green Wait on Symbol	R10-22	9B.13	12 x 18	12 x 18
Bike Push Button for Green Light	R10-24	9B.11	9 x 15	9 x 15
Push Button to Turn On Warning Lights	R10-25	9B.11	9 x 12	9 x 12
Bike Push Button for Green Light (arrow)	R10-26	9B.11	9 x 15	9 x 15
Grade Crossing (Crossbuck)	R15-1	8B.03, 9B.14	24 x 4.5	48 x 9
Number of Tracks (plaque)	R15-2P	8B.03, 9B.14	13.5 x 9	27 x 18
Look	R15-8	8B.17, 9B.14	18 x 9	36 x 18
Turn and Curve Warning	W1-1,2,3,4,5	2C.04, 9B.15	18 x 18	24 x 24
Arrow Warning	W1-6,7	2C.12, 2C.47, 9B.15	24 x 12	36 x 18
Intersection Warning	W2-1,2,3,4,5	2C.46, 9B.16	18 x 18	24 x 24
Stop,Yield, Signal Ahead	W3-1,2,3	2C.36, 9B.19	18 x 18	30 x 30
Narrow Bridge	W5-2	2C.20, 9B.19	18 x 18	30 x 30
Path Narrows	W5-4a	9B.19	18 x 18	—
Hill	W7-5	9B.19	18 x 18	30 x 30
Bump or Dip	W8-1,2	2C.28, 9B.17	18 x 18	24 x 24
Pavement Ends	W8-3	2C.30, 9B.17	18 x 18	30 x 30
Bicycle Surface Condition	W8-10	9B.17	18 x 18	30 x 30
Slippery When Wet (plaque)	W8-10P	9B.17	12 x 9	12 x 9
Grade Crossing Advance Warning	W10-1	8B.06, 9B.19	24 Dia.	36 Dia.
No Train Horn (plaque)	W10-9P	8B.21, 9B.19	18 x 12	30 x 24
Skewed Crossing	W10-12	8B.25, 9B.19	18 x 18	36 x 36
Bicycle Warning	W11-1	9B.18	18 x 18	24 x 24
Pedestrian Crossing	W11-2	2C.50, 9B.19	18 x 18	24 x 24
Combination Bike and Ped Crossing	W11-15	9B.18	18 x 18	30 x 30
Trail Crossing (plaque)	W11-15P	9B.18	18 x 12	24 x 18
Low Clearance	W12-2	2C.27, 9B.19	18 x 18	30 x 30
Playground	W15-1	2C.51, 9B.19	18 x 18	24 x 24
Share the Road (plaque)	W16-1P	2C.60, 9B.19	—	18 x 24

Table 9B-1. Bicycle Facility Sign and Plaque Minimum Sizes (Sheet 2 of 2)

Sign or Plaque	Sign Designation	Section	Shared-Use Path	Roadway
XX Feet (plaque)	W16-2P	2C.55, 9B.18	18 x 12	24 x 18
XX Ft (plaque)	W16-2aP	2C.55, 9B.18	18 x 9	24 x 12
Diagonal Arrow (plaque)	W16-7P	9B.18	—	24 x 12
Ahead (plaque)	W16-9P	9B.18	—	24 x 12
Destination (1 line)	D1-1, D1-1a	2D.37, 9B.20	varies x 6	varies x 18
Bicycle Destination (1 line)	D1-1b, D1-1c	9B.20	varies x 6	varies x 6
Destination (2 lines)	D1-2, D1-2a	2D.37, 9B.20	varies x 12	varies x 30
Bicycle Destination (2 lines)	D1-2b, D1-2c	9B.20	varies x 12	varies x 12
Destination (3 lines)	D1-3, D1-3a	2D.37, 9B.20	varies x 18	varies x 42
Bicycle Destination (3 lines)	D1-3b, D1-3c	9B.20	varies x 18	varies x 18
Street Name	D3-1	2D.43, 9B.20	varies x 6	varies x 8
Bicycle Parking Area	D4-3	9B.23	12 x 18	12 x 18
Reference Location (1-digit)	D10-1	2H.02, 9B.24	6 x 12	10 x 18
Intermediate Reference Location (1-digit)	D10-1a	2H.02, 9B.24	6 x 18	10 x 27
Reference Location (2-digit)	D10-2	2H.02, 9B.24	6 x 18	10 x 27
Intermediate Reference Location (2-digit)	D10-2a	2H.02, 9B.24	6 x 24	10 x 36
Reference Location (3-digit)	D10-3	2H.02, 9B.24	6 x 24	10 x 36
Intermediate Reference Location (3-digit)	D10-3a	2H.02, 9B.24	6 x 30	10 x 48
Bike Route	D11-1, D11-1c	9B.20	24 x 18	24 x 18
Bicycles Permitted	D11-1a	9B.25	18 x 18	—
Bike Route (plaque)	D11-1bP	9B.25	18 x 6	—
Pedestrians Permitted	D11-2	9B.25	18 x 18	—
Skaters Permitted	D11-3	9B.25	18 x 18	—
Equestrians Permitted	D11-4	9B.25	18 x 18	—
Bicycle Route	M1-8, M1-8a	9B.21	12 x 18	18 x 24
U.S. Bicycle Route	M1-9	9B.21	12 x 18	18 x 24
Bicycle Route Auxiliary Signs	M2-1; M3-1,2,3,4; M4-1,1a,2,3,5,6,7,7a,8,14	9B.22	12 x 6	12 x 6
Bicycle Route Arrow Signs	M5-1,2; M6-1,2,3,4,5,6,7	9B.22	12 x 9	12 x 9
Type 3 Object Markers	OM3-L,C,R	2C.63, 9B.26	6 x 18	12 x 36

Notes: 1. Larger signs may be used when appropriate
2. Dimensions are shown in inches and are shown as width x height

Guidance:

04 *Except for size, the design of signs and plaques for bicycle facilities should be identical to that provided in this Manual for signs and plaques for streets and highways.*

Support:

05 Uniformity in design of bicycle signs and plaques includes shape, color, symbols, arrows, wording, lettering, and illumination or retroreflectorization.

Section 9B.03 STOP and YIELD Signs (R1-1, R1-2)

Standard:

01 **STOP (R1-1) signs (see Figure 9B-2) shall be installed on shared-use paths at points where bicyclists are required to stop.**

02 **YIELD (R1-2) signs (see Figure 9B-2) shall be installed on shared-use paths at points where bicyclists have an adequate view of conflicting traffic as they approach the sign, and where bicyclists are required to yield the right-of-way to that conflicting traffic.**