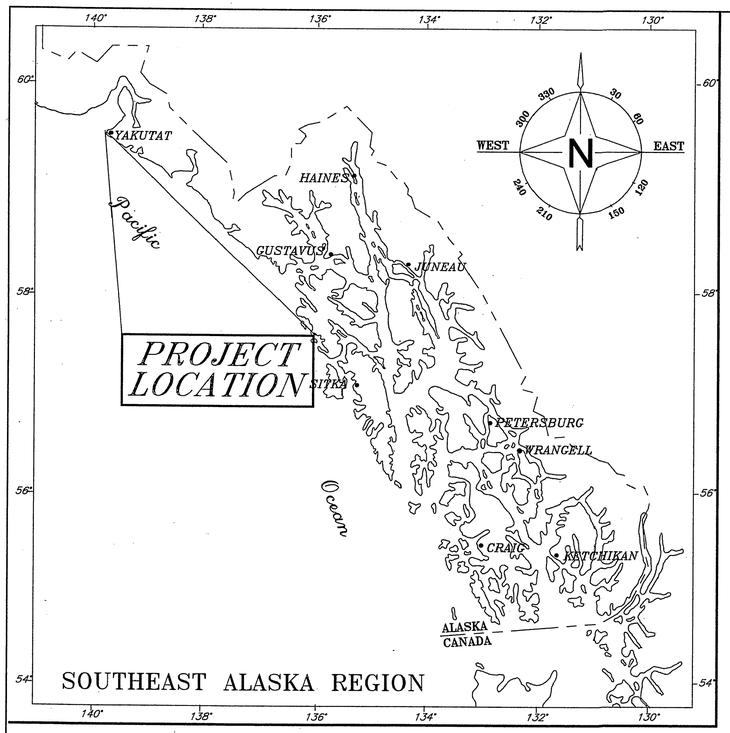

STATE OF ALASKA
DEPARTMENT OF TRANSPORTATION AND PUBLIC FACILITIES
STATEWIDE DESIGN AND ENGINEERING SERVICES DIVISION

YAKUTAT, ALASKA

YAKUTAT AIRPORT RUNWAY & TAXIWAY LIGHTING IMPROVEMENTS

A.I.P. NO. 3-02-0327-13-99
PROJECT NO. 67522

INDEX OF SHEETS

SHEET NO.	DESCRIPTION
T1	TITLE SHEET
T2	ESTIMATE OF QUANTITIES
E1	ELECTRICAL SYSTEMS PROJECT SITE PLAN & LEGEND
E2	EXISTING RUNWAY 2-20 LIGHTING PLAN
E3	RUNWAY 2-20 TAXIWAYS "B" "C" & "D" & APRON "B" LIGHTING PLAN
E4	RUNWAYS 11-29 & 2-20 TAXIWAY "A" APRON "A" LIGHTING PLAN
E5	RUNWAY 11-29 LIGHTING PLAN
E6	CIRCUIT DIAGRAM-AIRPORT LIGHTING
E7	CONDUIT/CABLE SCHEDULE
E8	ELECTRIC DETAILS
E9	WINDCONE & BEACON DETAILS
E10R	SINGLE LINE DIAGRAM-POWER
E10R	SINGLE LINE DIAGRAM-GROUNDING
~~E12~~	~~GENERATOR & REGULATOR SHELTERS~~
~~E13~~	~~GENERATOR SHELTER~~
E14R-A	~~REGULATOR SHELTER~~ Generator/Regulator Shelter
E14R-B	~~E15~~ ~~AIRPORT LIGHTING CONTROLS~~ Ventilation Controls
E15	Airport Lighting Controls
C1	RUNWAY/TAXIWAY/APRON LIGHTING SCHEDULE
C2	GUIDANCE SIGN PLAN
C3	GUIDANCE SIGN/SAFETY PLAN DETAILS
C4	SAFETY PLAN
~~C5~~	~~SNOW SHED ROOF PLAN~~

CONTRACTOR: SWANSON GENERAL CONTRACTORS INC.
11221 OLIVE LANE
ANCHORAGE, AK 99515

PROJECT ENGINEER: MIKE LAVERING
CONSULTANT ENGINEER: R+M, PAUL HETZEL
LETTER OF AWARD/ NOTICE TO PROCEED: OCTOBER 21, 1999
CONSTRUCTION BEGAN: APRIL 19, 2000
COMPLETION DATE: SEPTEMBER 10, 2000

THE FOLLOWING STANDARD DRAWING APPLY TO THIS PROJECT:
A-1, D-01.02, D-04.10, D-23.00, M-13.01, M-16.01,

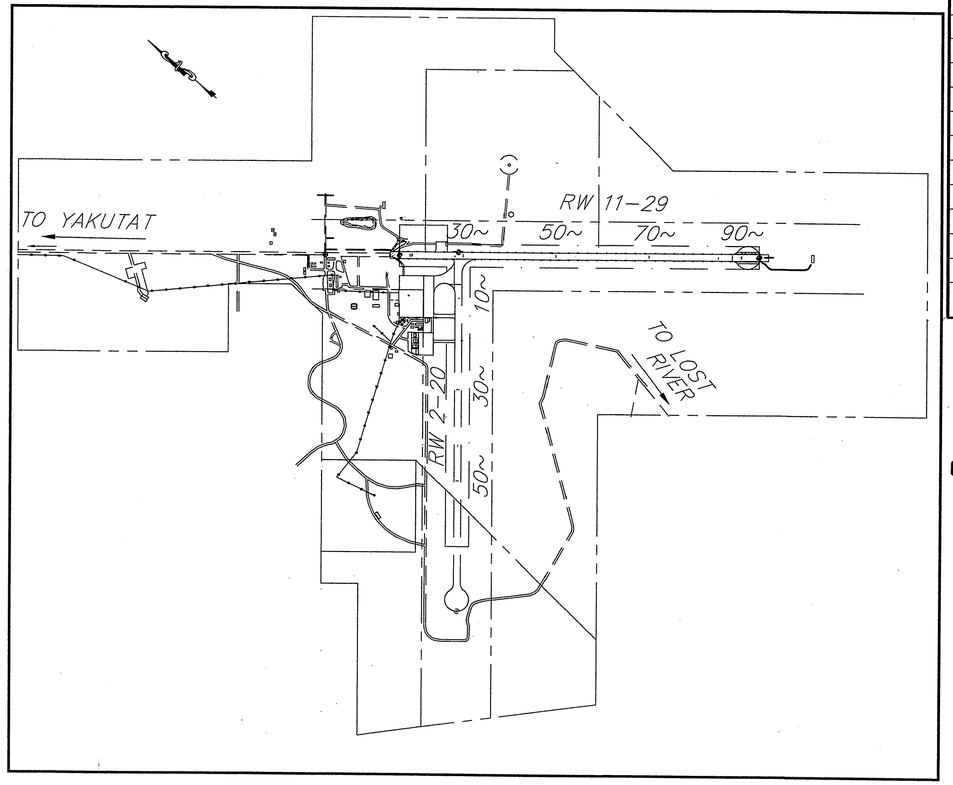

VICINITY MAP

"AS-BUILTS"

STATE OF ALASKA
DEPARTMENT OF TRANSPORTATION AND PUBLIC FACILITIES
STATEWIDE DESIGN AND ENGINEERING SERVICES DIVISION

APPROVED _____ Date _____
Regional Preconstruction Engineer

APPROVED _____ Date _____
Director, S.E. Region

PROJECT NUMBER:	ENGINEER'S SEAL
67522	STATE OF ALASKA 49th William J. Holbrook CE-6265 REGISTERED PROFESSIONAL ENGINEER
DATE: 1999	
SHEET T1 OF 2	

P:\YAK\72214\EN_TSH2 PLOTF.PCP(1) OR PLOTH.PCP(2)

RUNWAY LIGHTS SCHEDULE

UNIT NO.	STATION	OFFSET	REMARKS
L1	RW 11-29 18+15	85' LT.	**WHITE/YELLOW LENS
R1	RW 11-29 18+15	85' RT.	" " "
L2	RW 11-29 20+10	85' LT.	" " "
R2	RW 11-29 20+10	85' RT.	" " "
L3	RW 11-29 22+05	85' LT.	" " "
R3	RW 11-29 22+05	85' RT.	" " "
L4	RW 11-29 24+00	85' LT.	" " "
R4	RW 11-29 24+00	85' RT.	" " "
L5	RW 11-29 25+95	85' LT.	" " "
R5	RW 11-29 25+95	85' RT.	" " "
L6	RW 11-29 27+90	85' LT.	" " "
R6	RW 11-29 27+90	85' RT.	" " "
L7	RW 11-29 29+90	85' LT.	" " "
*R6A	RW 11-29 29+90	85' RT.	" " "
*R7	RW 11-29 31+90	85' RT.	" " "
L8	RW 11-29 31+90	85' LT.	" " "
R8	RW 11-29 33+90	85' RT.	" " "
L9	RW 11-29 33+90	85' LT.	" " "
R9	RW 11-29 35+90	85' RT.	WHITE LENS
L10	RW 11-29 35+90	85' LT.	" "
R10	RW 11-29 37+90	85' RT.	" "
L11	RW 11-29 37+90	85' LT.	" "
R11	RW 11-29 39+90	85' RT.	" "
L12	RW 11-29 39+90	85' LT.	" "
R12	RW 11-29 41+90	85' RT.	" "
L13	RW 11-29 41+90	85' LT.	" "
R13	RW 11-29 43+90	85' RT.	" "
L14	RW 11-29 43+90	85' LT.	" "
R14	RW 11-29 45+90	85' RT.	" "
L15	RW 11-29 45+90	85' LT.	" "
R15	RW 11-29 47+90	85' RT.	" "
L16	RW 11-29 47+90	85' LT.	" "
R16	RW 11-29 49+90	85' RT.	" "
L17	RW 11-29 49+90	85' LT.	" "
R17	RW 11-29 51+90	85' RT.	" "
L18	RW 11-29 51+90	85' LT.	" "
R18	RW 11-29 53+90	85' RT.	" "
L19	RW 11-29 53+90	85' LT.	" "
R19	RW 11-29 55+90	85' RT.	" "
L20	RW 11-29 55+90	85' LT.	" "
R20	RW 11-29 57+90	85' RT.	" "
L21	RW 11-29 57+90	85' LT.	" "
R21	RW 11-29 59+90	85' RT.	" "
L22	RW 11-29 59+90	85' LT.	" "
R22	RW 11-29 61+90	85' RT.	" "
L23	RW 11-29 61+90	85' LT.	" "
R23	RW 11-29 63+90	85' RT.	" "
L24	RW 11-29 63+90	85' LT.	" "
R24	RW 11-29 65+90	85' RT.	" "
L25	RW 11-29 65+90	85' LT.	" "
R25	RW 11-29 67+90	85' RT.	" "
L26	RW 11-29 67+90	85' LT.	" "
R26	RW 11-29 69+90	85' RT.	" "
L27	RW 11-29 69+90	85' LT.	" "
R27	RW 11-29 71+90	85' RT.	" "
L28	RW 11-29 71+90	85' LT.	" "
R28	RW 11-29 73+90	85' RT.	**WHITE/YELLOW LENS
L29	RW 11-29 73+90	85' LT.	" " "
R29	RW 11-29 75+90	85' RT.	" " "
L30	RW 11-29 75+90	85' LT.	" " "
R30	RW 11-29 77+90	85' RT.	" " "
L31	RW 11-29 77+90	85' LT.	" " "
R31	RW 11-29 79+90	85' RT.	" " "
L32	RW 11-29 79+90	85' LT.	" " "
R32	RW 11-29 81+90	85' RT.	" " "
L33	RW 11-29 81+90	85' LT.	" " "
R33	RW 11-29 83+90	85' RT.	" " "
L34	RW 11-29 83+90	85' LT.	" " "
R34	RW 11-29 85+90	85' RT.	" " "
L35	RW 11-29 85+90	85' LT.	" " "

UNIT NO.	STATION	OFFSET	REMARKS
R35	RW 11-29 87+90	85' RT.	**WHITE/YELLOW LENS
L36	RW 11-29 87+90	85' LT.	" " "
*R36	RW 11-29 89+90	85' RT.	" " "
*L37	RW 11-29 89+90	85' LT.	" " "
*R37	RW 11-29 91+90	85' RT.	" " "
*L38	RW 11-29 91+90	85' LT.	" " "

TOTAL ELEVATED RW LIGHTS = 70
TOTAL FLUSH MOUNTED RW LIGHTS = 6

GENERAL NOTES:

1. FOR OVERALL LIGHTING PLAN & OTHER LIGHTING DETAILS SEE SHTS E1 THRU E15.
2. ~~CONCRETE PAVEMENT WILL BE ENCOUNTERED DURING EXCAVATION AT NEW THRESHOLD LIGHT AND RUNWAY CONDUIT CROSSING LOCATIONS.~~
2. ~~3.~~ RUNWAY LIGHTS R6A, R7, R36, R37, L37, L38 ARE FLUSH MOUNTED.
4. ~~EXISTING RUNWAY LIGHTS ONCE REMOVED SHALL BECOME PROPERTY OF THE YAKUTAT AIRPORT MANAGER. THEY SHALL BE STOCKPILED AS DIRECTED BY THE AIRPORT MANAGER.~~

TAXIWAY LIGHTS SCHEDULE

UNIT NO.	STATION	OFFSET	REMARKS
T1	RW 2-20 2+01	103' RT.	BLUE LENS
T2	RW 2-20 2+35	107' RT.	" "
T3	SEE PLAN	SEE PLAN	" "
T4	" "	" "	" "
T5	A 14+98	10' RT.	" "
T15	SEE PLAN	SEE PLAN	" "
T16	" "	" "	" "
T17	A 13+00	157' LT.	" "
T18	SEE PLAN	SEE PLAN	" "
T19	" "	" "	" "
T20	A 15+17	380' LT.	" "

TOTAL TW LIGHTS = 11

THRESHOLD LIGHTS SCHEDULE

UNIT NO.	STATION	OFFSET	REMARKS
TH1	16+19	85' LT.	***GREEN/RED LENS
TH2	16+19	74' LT.	" "
TH3	16+19	63' LT.	" "
TH4	16+19	52' LT.	" "
TH5	16+19	52' RT.	" "
TH6	16+19	63' RT.	" "
TH7	16+19	74' RT.	" "
TH8	16+19	85' RT.	" "
TH17	93+85	85' LT.	" "
TH18	93+85	74' LT.	" "
TH19	93+85	63' LT.	" "
TH20	93+85	52' LT.	" "
TH21	93+85	52' RT.	" "
TH22	93+85	63' RT.	" "
TH23	93+85	74' RT.	" "
TH24	93+85	85 RT.	" "

TOTAL THRESHOLD LIGHTS = 16

LENS ORIENTATION:

*FLUSH MOUNTED
**YELLOW=RUNWAY MIDPOINT SIDE OF LENS
***RED=RUNWAY MIDPOINT SIDE OF LENS

NOTE: DO NOT SCALE FROM THESE PLANS-USE DIMENSIONS

PATH: P:\YAK\72214\DR_LTSUM99.DWG
PLOT: P:\-LIB\-PLOT\PLOTF.PCP(300) OR PLOTH.PCP(600)

BY:	DATE:	DESCRIPTION OF CHANGE:

STATE OF ALASKA
DEPARTMENT OF TRANSPORTATION AND PUBLIC FACILITIES
SOUTHEAST REGION

YAKUTAT — YAKUTAT AIRPORT RUNWAY & TAXIWAY LIGHTING IMPROVEMENTS — ALASKA
AIP NO. 3-02-0327-13-99 ~ PROJECT NO. 67522

RUNWAY/TAXIWAY/APRON LIGHTING SCHEDULE

DESIGNED BY: WJH	PROJECT NO. 67522
DRAWN BY: WJH	DATE: 1999
CHECKED BY:	SHEET C1 OF 5

STATE OF ALASKA 49th William J. Holbrook CE-6265 REGISTERED PROFESSIONAL ENGINEER

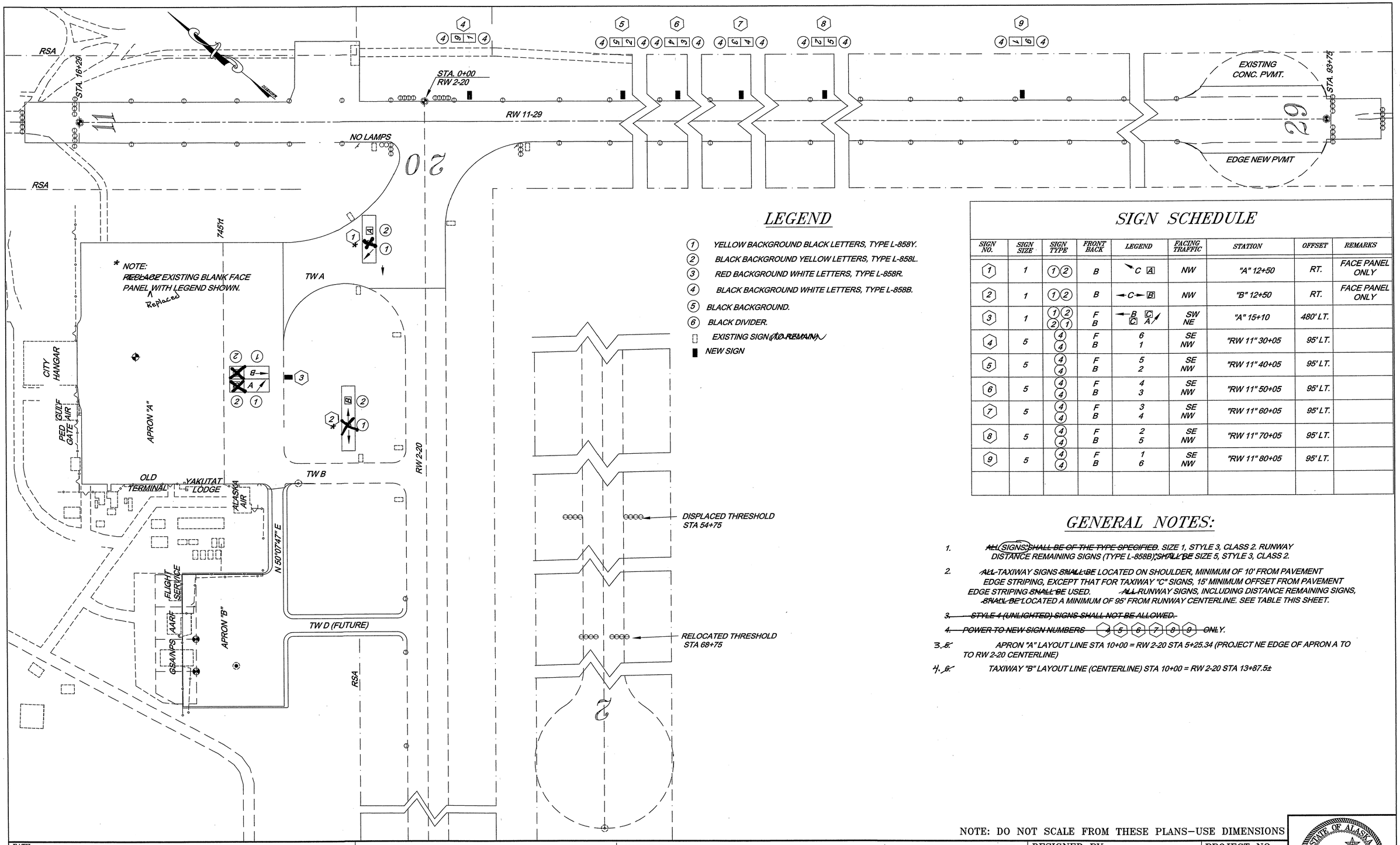

LEGEND

1. YELLOW BACKGROUND BLACK LETTERS, TYPE L-858Y.
2. BLACK BACKGROUND YELLOW LETTERS, TYPE L-858L.
3. RED BACKGROUND WHITE LETTERS, TYPE L-858R.
4. BLACK BACKGROUND WHITE LETTERS, TYPE L-858B.
5. BLACK BACKGROUND.
6. BLACK DIVIDER.

EXISTING SIGN (TO REMAIN)

NEW SIGN

SIGN SCHEDULE

SIGN NO.	SIGN SIZE	SIGN TYPE	FRONT BACK	LEGEND	FACING TRAFFIC	STATION	OFFSET	REMARKS
1	1	1 2	B	C A	NW	"A" 12+50	RT.	FACE PANEL ONLY
2	1	1 2	B	C B	NW	"B" 12+50	RT.	FACE PANEL ONLY
3	1	1 2 2 1	F B	B C C A	SW NE	"A" 15+10	480' LT.	
4	5	4 4	F B	6 1	SE NW	"RW 11" 30+05	95' LT.	
5	5	4 4	F B	5 2	SE NW	"RW 11" 40+05	95' LT.	
6	5	4 4	F B	4 3	SE NW	"RW 11" 50+05	95' LT.	
7	5	4 4	F B	3 4	SE NW	"RW 11" 60+05	95' LT.	
8	5	4 4	F B	2 5	SE NW	"RW 11" 70+05	95' LT.	
9	5	4 4	F B	1 6	SE NW	"RW 11" 80+05	95' LT.	

GENERAL NOTES:

1. ~~ALL~~ SIGNS ~~SHALL BE OF THE TYPE SPECIFIED~~. SIZE 1, STYLE 3, CLASS 2. RUNWAY DISTANCE REMAINING SIGNS (TYPE L-858B) ~~SHALL BE~~ SIZE 5, STYLE 3, CLASS 2.
2. ~~ALL~~ TAXIWAY SIGNS ~~SHALL BE~~ LOCATED ON SHOULDER, MINIMUM OF 10' FROM PAVEMENT EDGE STRIPING, EXCEPT THAT FOR TAXIWAY "C" SIGNS, 15' MINIMUM OFFSET FROM PAVEMENT EDGE STRIPING ~~SHALL BE~~ USED. ~~ALL~~ RUNWAY SIGNS, INCLUDING DISTANCE REMAINING SIGNS, ~~SHALL BE~~ LOCATED A MINIMUM OF 95' FROM RUNWAY CENTERLINE. SEE TABLE THIS SHEET.
3. ~~STYLE 4 (UNLIGHTED) SIGNS SHALL NOT BE ALLOWED.~~
4. ~~POWER TO NEW SIGN NUMBERS 4 5 6 7 8 9 ONLY.~~

3. ~~5.~~ APRON "A" LAYOUT LINE STA 10+00 = RW 2-20 STA 5+25.34 (PROJECT NE EDGE OF APRON A TO TO RW 2-20 CENTERLINE)

4. ~~6.~~ TAXIWAY "B" LAYOUT LINE (CENTERLINE) STA 10+00 = RW 2-20 STA 13+87.5±

NOTE: DO NOT SCALE FROM THESE PLANS—USE DIMENSIONS

PATH: Q:\YAK\72214\EN\-GUIDSGN.DWG		
PLOT: P:\-LIB\-PLOT\PLOTF.PCP(40) OR PLOTH.PCP(80)		
BY:	DATE:	DESCRIPTION OF CHANGE:

STATE OF ALASKA
DEPARTMENT OF TRANSPORTATION AND PUBLIC FACILITIES
SOUTHEAST REGION

YAKUTAT — YAKUTAT AIRPORT RUNWAY & TAXIWAY LIGHTING IMPROVEMENTS — ALASKA
AIP NO. 3-02-0327-13-99 ~ PROJECT NO. 67522
GUIDANCE SIGN PLAN

DESIGNED BY: WJH	PROJECT NO. 67522
DRAWN BY: P.JONES/WJH	DATE: 1999
CHECKED BY: WJH	SHEET C2 OF 5

STATE OF ALASKA 49th William J. Holbrook CE-6265 REGISTERED PROFESSIONAL ENGINEER

GUIDANCE SIGN NOTES:

1. FOR ADDITIONAL GUIDANCE SIGN DETAILS SEE PLAN SHT E8 AND SPECIAL PROVISIONS SECTION 1000.

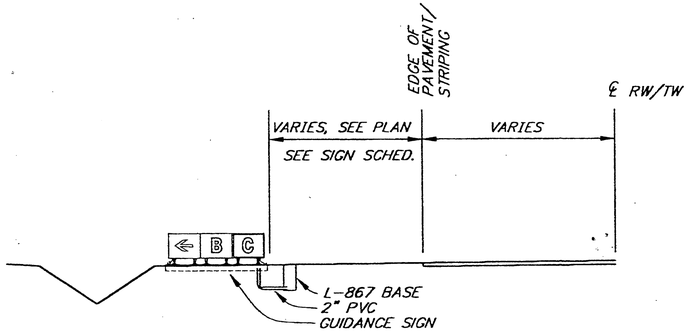

TYPICAL CROSS SECTION DETAIL AT GUIDANCE SIGN

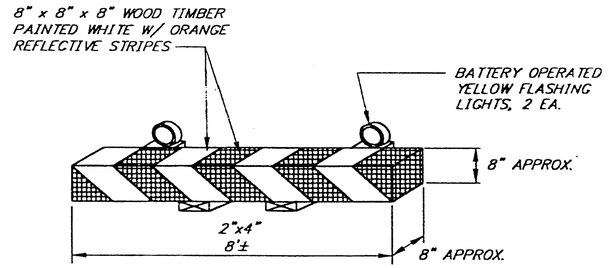

NOTES:
1. BASE MAY BE MADE FROM WOOD OR SIMILAR MATERIAL AND MUST BE ANCHORED TO RESIST JET BLAST.
2. SEE WORK ZONE DETAIL FOR BARRIER LOCATIONS.

TYPICAL CONSTRUCTION BARRIER ADJACENT TO MOVEMENT AREA

N.T.S.

SAFETY PLAN DETAIL NOTES:

1. FOR SAFETY PLAN SEE SHEET C4.
2. WORK ZONE DETAIL SHOWN THIS SHEET IS ILLUSTRATIVE ONLY. ALL TAXIWAYS, RUNWAYS AND APRONS SHALL REMAIN OPEN TO AIR TRAFFIC AT ALL TIMES, EXCEPT AS NOTED BELOW.
3. RUNWAY CLOSURES WILL BE LIMITED TO NIGHTTIME OPERATIONS (6PM TO 6AM) ONLY. SEE SECTION 80 OF THE SPECIAL PROVISIONS FOR MORE INFORMATION.

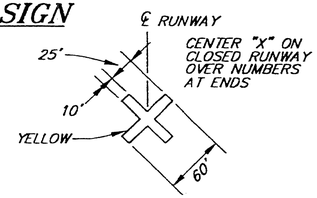

DETAIL "A" (SEE NOTE 3 ABOVE

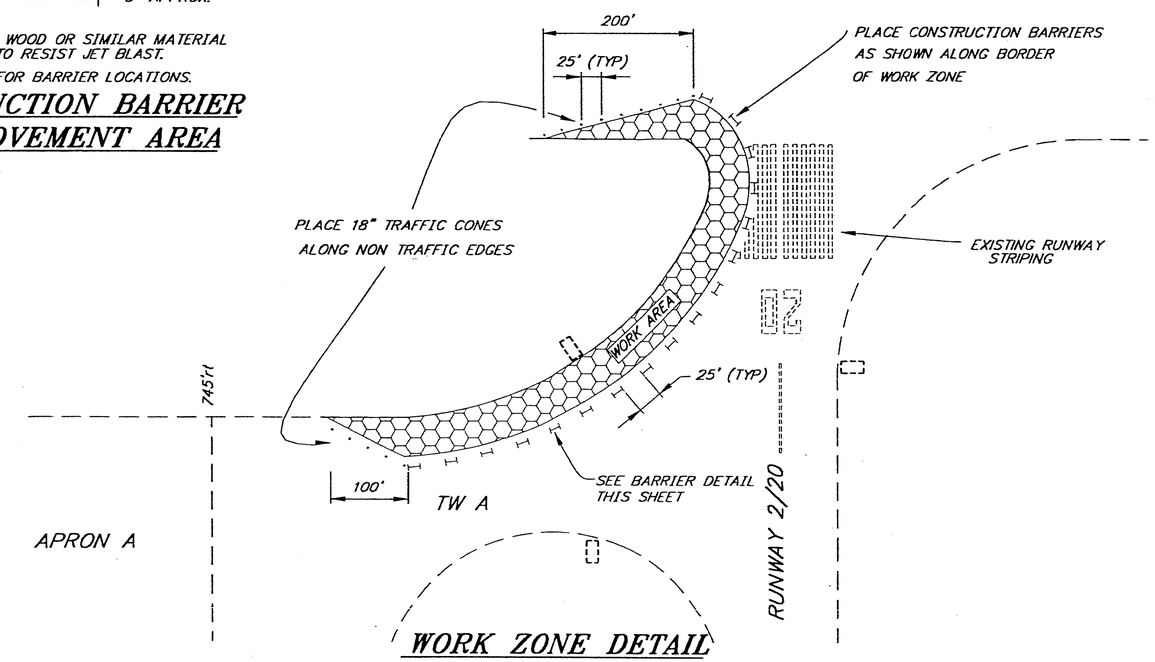

WORK ZONE DETAIL

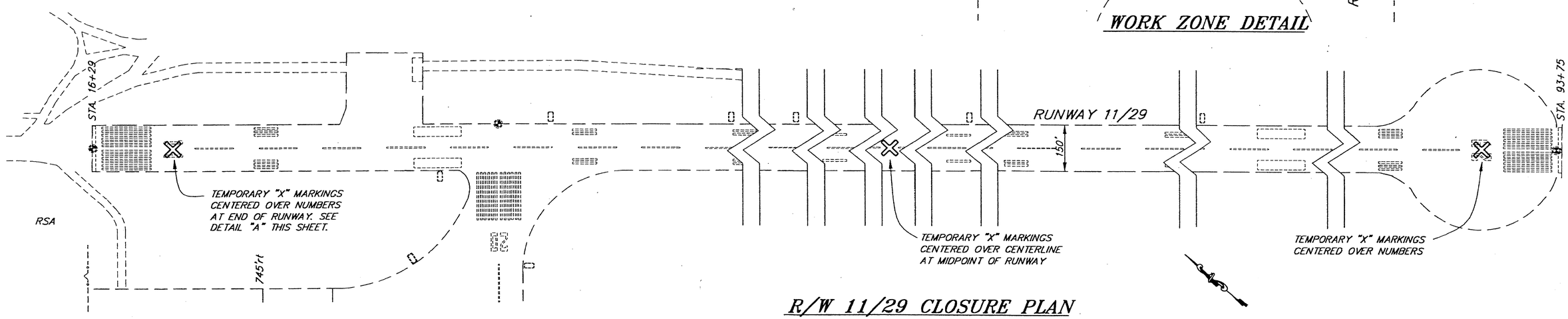

R/W 11/29 CLOSURE PLAN

NOTE: DO NOT SCALE FROM THESE PLANS-USE DIMENSIONS

PATH: Q:\YAK\72214\EN\-GSGNDET.DWG		
PLOT: P:\-LIB\-PLOT\PLOTF.PCP(1) OR PLOTH.PCP(2)		
BY:	DATE:	DESCRIPTION OF CHANGE:

STATE OF ALASKA
DEPARTMENT OF TRANSPORTATION AND PUBLIC FACILITIES
SOUTHEAST REGION

YAKUTAT — YAKUTAT AIRPORT RUNWAY & TAXIWAY LIGHTING IMPROVEMENTS — ALASKA
AIP NO. 3-02-0327-13-99 ~ PROJECT NO. 67522

GUIDANCE SIGN/SAFETY PLAN DETAILS

DESIGNED BY: WJH	PROJECT NO. 67522
DRAWN BY: WJH	DATE: 1999
CHECKED BY:	SHEET C3 OF 5

STATE OF ALASKA 49th William J. Holbrook CE-6265 REGISTERED PROFESSIONAL ENGINEER

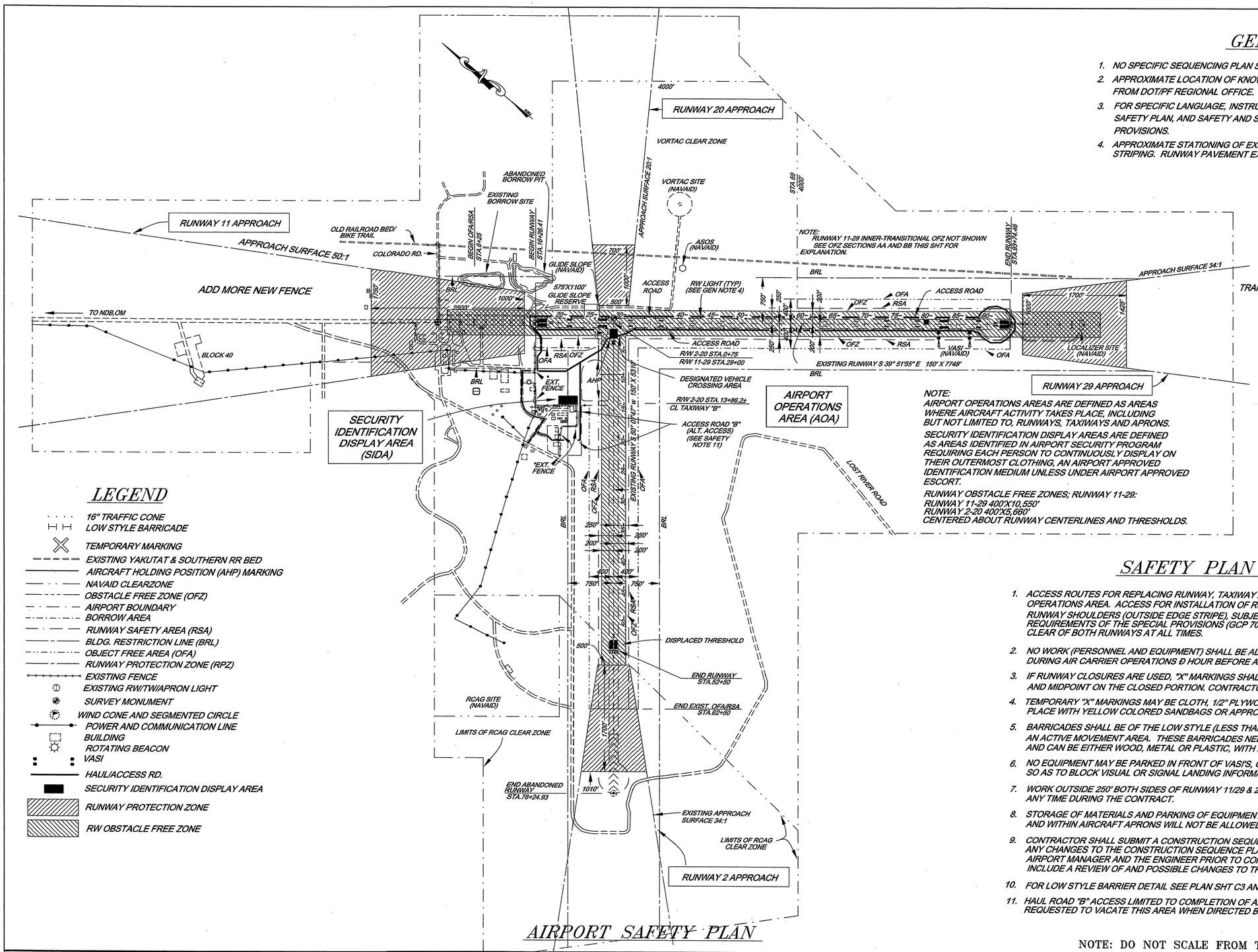

AIRPORT SAFETY PLAN

GENERAL NOTES

1. NO SPECIFIC SEQUENCING PLAN SHOWN. SEE NOTES BELOW.
2. APPROXIMATE LOCATION OF KNOWN UTILITIES AND NAVAID COMMUNICATIONS AVAILABLE FROM DOT/PF REGIONAL OFFICE. CONTACT PH. NO. 465-4447.
3. FOR SPECIFIC LANGUAGE, INSTRUCTIONS, REGULATIONS AND RESTRICTIONS CONCERNING SAFETY PLAN, AND SAFETY AND SECURITY ISSUES, SEE SECTIONS 70, 80 OF THE SPECIAL PROVISIONS.
4. APPROXIMATE STATIONING OF EXISTING RUNWAY LIGHTING IS 5'± FROM RUNWAY EDGE STRIPING. RUNWAY PAVEMENT EXTENDS TO EXISTING LIGHTS.

NOTE:
AIRPORT OPERATIONS AREAS ARE DEFINED AS AREAS WHERE AIRCRAFT ACTIVITY TAKES PLACE, INCLUDING BUT NOT LIMITED TO, RUNWAYS, TAXIWAYS AND APRONS.

SECURITY IDENTIFICATION DISPLAY AREAS ARE DEFINED AS AREAS IDENTIFIED IN AIRPORT SECURITY PROGRAM REQUIRING EACH PERSON TO CONTINUOUSLY DISPLAY ON THEIR OUTERMOST CLOTHING, AN AIRPORT APPROVED IDENTIFICATION MEDIUM UNLESS UNDER AIRPORT APPROVED ESCORT.

RUNWAY OBSTACLE FREE ZONES; RUNWAY 11-29:
RUNWAY 11-29 400'X10,550'
RUNWAY 2-20 400'X5,660'
CENTERED ABOUT RUNWAY CENTERLINES AND THRESHOLDS.

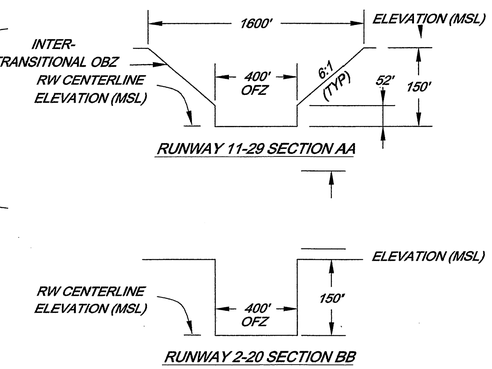

OBSTACLE FREE ZONES

LEGEND

- 16" TRAFFIC CONE
- LOW STYLE BARRICADE
- TEMPORARY MARKING
- EXISTING YAKUTAT & SOUTHERN RR BED
- AIRCRAFT HOLDING POSITION (AHP) MARKING
- NAVAID CLEARZONE
- OBSTACLE FREE ZONE (OFZ)
- AIRPORT BOUNDARY
- BORROW AREA
- RUNWAY SAFETY AREA (RSA)
- BLDG. RESTRICTION LINE (BRL)
- OBJECT FREE AREA (OFA)
- RUNWAY PROTECTION ZONE (RPZ)
- EXISTING FENCE
- EXISTING RW/TW/APRON LIGHT
- SURVEY MONUMENT
- WIND CONE AND SEGMENTED CIRCLE
- POWER AND COMMUNICATION LINE
- BUILDING
- ROTATING BEACON
- VASI
- HAUL/ACCESS RD.
- SECURITY IDENTIFICATION DISPLAY AREA
- RUNWAY PROTECTION ZONE
- RW OBSTACLE FREE ZONE

SAFETY PLAN NOTES

1. ACCESS ROUTES FOR REPLACING RUNWAY, TAXIWAY AND APRON LIGHTS IS WITHIN THE AIRPORT OPERATIONS AREA. ACCESS FOR INSTALLATION OF RUNWAY LIGHTS SHALL BE GAINED BY USE OF RUNWAY SHOULDERS (OUTSIDE EDGE STRIPE), SUBJECT TO SAFETY AND SECURITY ACCESS CONTROL REQUIREMENTS OF THE SPECIAL PROVISIONS (GCP 70-02 AND 80-04). CONTRACTOR SHALL REMAIN CLEAR OF BOTH RUNWAYS AT ALL TIMES.
2. NO WORK (PERSONNEL AND EQUIPMENT) SHALL BE ALLOWED WITHIN 250' OF RUNWAY 11/29 DURING AIR CARRIER OPERATIONS Ð HOUR BEFORE ARRIVAL UNTIL Ð HOUR AFTER DEPARTURE.
3. IF RUNWAY CLOSURES ARE USED, "X" MARKINGS SHALL BE PLACED OVER NUMBERS AND AT ENDS AND MIDPOINT ON THE CLOSED PORTION. CONTRACTOR SHALL SUBMIT SAFETY PLAN FOR APPROVAL.
4. TEMPORARY "X" MARKINGS MAY BE CLOTH, 1/2" PLYWOOD OR PLASTIC SECURELY ANCHORED IN PLACE WITH YELLOW COLORED SANDBAGS OR APPROVED MATERIAL (SEE DETAIL SHT XX).
5. BARRICADES SHALL BE OF THE LOW STYLE (LESS THAN 12") WHEN USED ADJACENT TO AN AN ACTIVE MOVEMENT AREA. THESE BARRICADES NEED TO BE MARKED AS SHOWN ON THE PLANS AND CAN BE EITHER WOOD, METAL OR PLASTIC, WITH NORMAL 8" ORANGE AND WHITE MARKINGS.
6. NO EQUIPMENT MAY BE PARKED IN FRONT OF VASI'S, GLIDE SLOPE, VORTAC OR LOCALIZER ANTENNAS SO AS TO BLOCK VISUAL OR SIGNAL LANDING INFORMATION.
7. WORK OUTSIDE 250' BOTH SIDES OF RUNWAY 11/29 & 2/20 CENTERLINE MAY BE PERFORMED AT ANY TIME DURING THE CONTRACT.
8. STORAGE OF MATERIALS AND PARKING OF EQUIPMENT WITHIN 250' OF BOTH SIDES OF BOTH RUNWAYS AND WITHIN AIRCRAFT APRONS WILL NOT BE ALLOWED.
9. CONTRACTOR SHALL SUBMIT A CONSTRUCTION SEQUENCE PLAN TO THE ENGINEER FOR APPROVAL. ANY CHANGES TO THE CONSTRUCTION SEQUENCE PLAN MUST BE APPROVED IN WRITING BY THE AIRPORT MANAGER AND THE ENGINEER PRIOR TO COMMENCING WORK. THIS WORK WILL INCLUDE A REVIEW OF AND POSSIBLE CHANGES TO THE SAFETY PLAN.
10. FOR LOW STYLE BARRIER DETAIL SEE PLAN SHT C3 AND SPECIALS FOR AREA OF APPLICATION/SPECIFICS.
11. HAUL ROAD "B" ACCESS LIMITED TO COMPLETION OF ADJOINING ELECTRICAL WORK. CONTRACTOR MAY BE REQUESTED TO VACATE THIS AREA WHEN DIRECTED BY AIRPORT MANAGER AT ANYTIME.

NOTE: DO NOT SCALE FROM THESE PLANS–USE DIMENSIONS

PATH:	Q:\YAK\72214\EN_SPLAN.DWG	
PLOT:	P:\-LIB\-PLOT\PLOTF.PCP(800) OR PLOTH.PCP(1600)	
BY:	DATE:	DESCRIPTION OF CHANGE:

STATE OF ALASKA
DEPARTMENT OF TRANSPORTATION AND PUBLIC FACILITIES
SOUTHEAST REGION

YAKUTAT — YAKUTAT AIRPORT RUNWAY & TAXIWAY LIGHTING IMPROVEMENTS — ALASKA
AIP NO. 3-02-0327-13-99 ~ PROJECT NO. 67522
SAFETY PLAN

DESIGNED BY: WJH	PROJECT NO. 67522
DRAWN BY: WJH	DATE: 1999
CHECKED BY:	SHEET C4 OF 5

STATE OF ALASKA 49th William J. Holbrook CE-6265 REGISTERED PROFESSIONAL ENGINEER

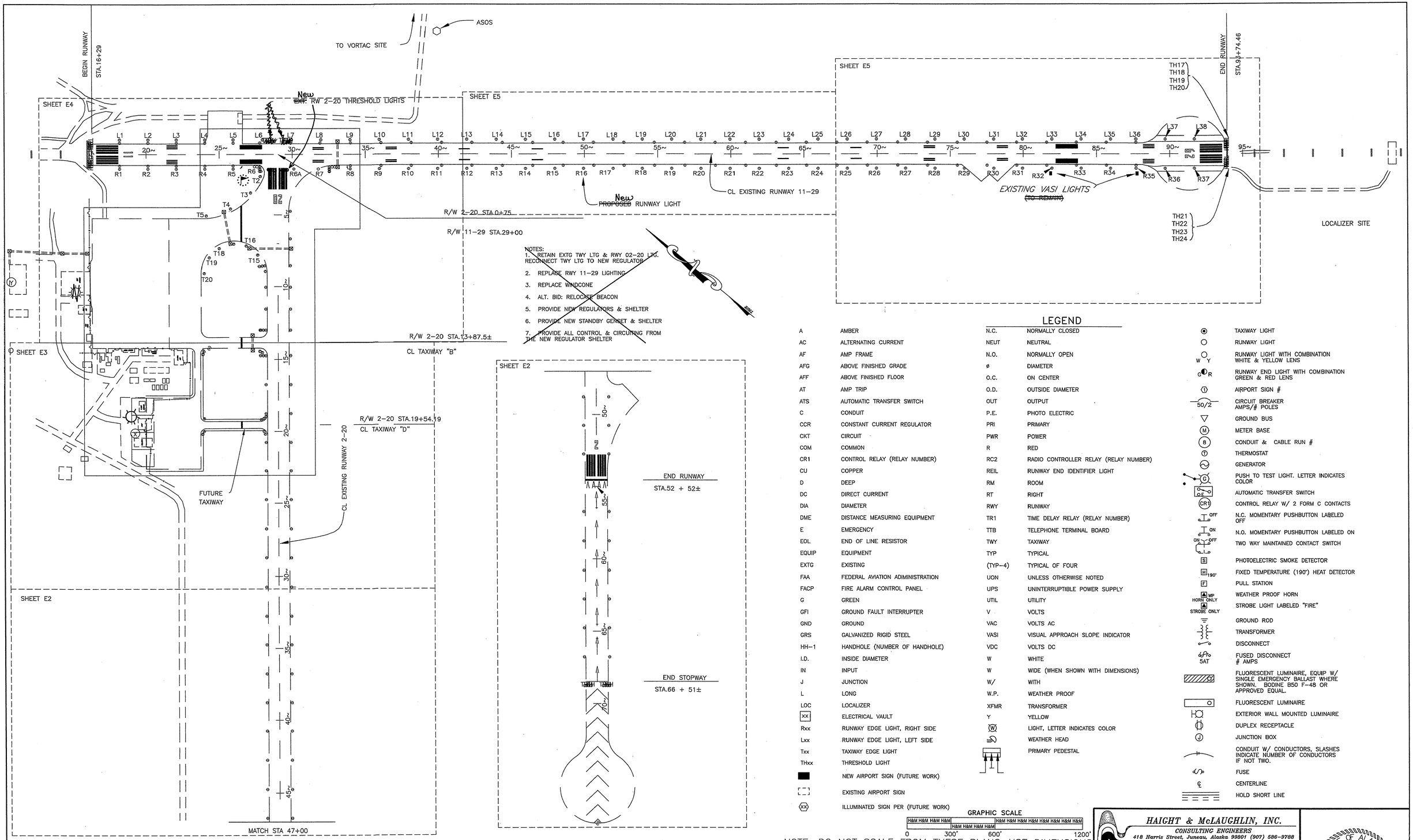

LEGEND

A	AMBER	N.C.	NORMALLY CLOSED
AC	ALTERNATING CURRENT	NEUT	NEUTRAL
AF	AMP FRAME	N.O.	NORMALLY OPEN
AFG	ABOVE FINISHED GRADE	ø	DIAMETER
AFF	ABOVE FINISHED FLOOR	O.C.	ON CENTER
AT	AMP TRIP	O.D.	OUTSIDE DIAMETER
ATS	AUTOMATIC TRANSFER SWITCH	OUT	OUTPUT
C	CONDUIT	P.E.	PHOTO ELECTRIC
CCR	CONSTANT CURRENT REGULATOR	PRI	PRIMARY
CKT	CIRCUIT	PWR	POWER
COM	COMMON	R	RED
CR1	CONTROL RELAY (RELAY NUMBER)	RC2	RADIO CONTROLLER RELAY (RELAY NUMBER)
CU	COPPER	REIL	RUNWAY END IDENTIFIER LIGHT
D	DEEP	RM	ROOM
DC	DIRECT CURRENT	RT	RIGHT
DIA	DIAMETER	RWY	RUNWAY
DME	DISTANCE MEASURING EQUIPMENT	TR1	TIME DELAY RELAY (RELAY NUMBER)
E	EMERGENCY	TTB	TELEPHONE TERMINAL BOARD
EOL	END OF LINE RESISTOR	TWY	TAXIWAY
EQUIP	EQUIPMENT	TYP	TYPICAL
EXTG	EXISTING	(TYP-4)	TYPICAL OF FOUR
FAA	FEDERAL AVIATION ADIMINISTRATION	UON	UNLESS OTHERWISE NOTED
FACP	FIRE ALARM CONTROL PANEL	UPS	UNINTERRUPTIBLE POWER SUPPLY
G	GREEN	UTIL	UTILITY
GFI	GROUND FAULT INTERRUPTER	V	VOLTS
GND	GROUND	VAC	VOLTS AC
GRS	GALVANIZED RIGID STEEL	VASI	VISUAL APPROACH SLOPE INDICATOR
HH-1	HANDHOLE (NUMBER OF HANDHOLE)	VDC	VOLTS DC
I.D.	INSIDE DIAMETER	W	WHITE
IN	INPUT	W	WIDE (WHEN SHOWN WITH DIMENSIONS)
J	JUNCTION	W/	WITH
L	LONG	W.P.	WEATHER PROOF
LOC	LOCALIZER	XFMR	TRANSFORMER
XX	ELECTRICAL VAULT	Y	YELLOW
Rxx	RUNWAY EDGE LIGHT, RIGHT SIDE	W	LIGHT, LETTER INDICATES COLOR
Lxx	RUNWAY EDGE LIGHT, LEFT SIDE		WEATHER HEAD
Txx	TAXIWAY EDGE LIGHT		PRIMARY PEDESTAL
THxx	THRESHOLD LIGHT		
	NEW AIRPORT SIGN (FUTURE WORK)		
	EXISTING AIRPORT SIGN		
XX	ILLUMINATED SIGN PER (FUTURE WORK)		

	TAXIWAY LIGHT
	RUNWAY LIGHT
W Y	RUNWAY LIGHT WITH COMBINATION WHITE & YELLOW LENS
G R	RUNWAY END LIGHT WITH COMBINATION GREEN & RED LENS
1	AIRPORT SIGN #
50/2	CIRCUIT BREAKER AMPS/# POLES
	GROUND BUS
M	METER BASE
B	CONDUIT & CABLE RUN #
T	THERMOSTAT
	GENERATOR
G	PUSH TO TEST LIGHT. LETTER INDICATES COLOR
	AUTOMATIC TRANSFER SWITCH
CR1	CONTROL RELAY W/ 2 FORM C CONTACTS
OFF	N.C. MOMENTARY PUSHBUTTON LABELED OFF
ON	N.O. MOMENTARY PUSHBUTTON LABELED ON
ON OFF	TWO WAY MAINTAINED CONTACT SWITCH
S	PHOTOELECTRIC SMOKE DETECTOR
H 190°	FIXED TEMPERATURE (190°) HEAT DETECTOR
F	PULL STATION
A WP HORN ONLY	WEATHER PROOF HORN
A STROBE ONLY	STROBE LIGHT LABELED "FIRE"
	GROUND ROD
	TRANSFORMER
	DISCONNECT
5AT	FUSED DISCONNECT # AMPS
	FLUORESCENT LUMINAIRE, EQUIP W/ SINGLE EMERGENCY BALLAST WHERE SHOWN. BODINE B50 F-48 OR APPROVED EQUAL.
	FLUORESCENT LUMINAIRE
	EXTERIOR WALL MOUNTED LUMINAIRE
	DUPLEX RECEPTACLE
J	JUNCTION BOX
	CONDUIT W/ CONDUCTORS, SLASHES INDICATE NUMBER OF CONDUCTORS IF NOT TWO.
	FUSE
℄	CENTERLINE
	HOLD SHORT LINE

GRAPHIC SCALE

0 300' 600' 1200'

NOTE: DO NOT SCALE FROM THESE PLANS—USE DIMENSIONS

HAIGHT & McLAUGHLIN, INC.
CONSULTING ENGINEERS
418 Harris Street, Juneau, Alaska 99801 (907) 586-9788

STATE OF ALASKA 49th B.C. HAIGHT EE 4800 REGISTERED PROFESSIONAL ENGINEER

PATH: P:\YAK\72214\EN_LIGHTS.DWG		
PLOT: P:\-LIB\-PLOT\PLOTF.PCP(300) OR PLOTH.PCP(600)		
BY:	DATE:	DESCRIPTION OF CHANGE:
RECORD OF REVISIONS		

STATE OF ALASKA
DEPARTMENT OF TRANSPORTATION AND PUBLIC FACILITIES
SOUTHEAST REGION

YAKUTAT — ALASKA

YAKUTAT AIRPORT RUNWAY & TAXIWAY LIGHTING IMPROVEMENTS
AIP NO. 3-02-0327-13-99 ~ PROJECT NO. 67522

ELECTRICAL SYSTEMS, PROJECT SITE PLAN & LEGEND

DESIGNED BY: WFB	PROJECT NO. 67522
DRAWN BY: WFB	DATE: 1999
CHECKED BY:	SHEET E1 OF 15

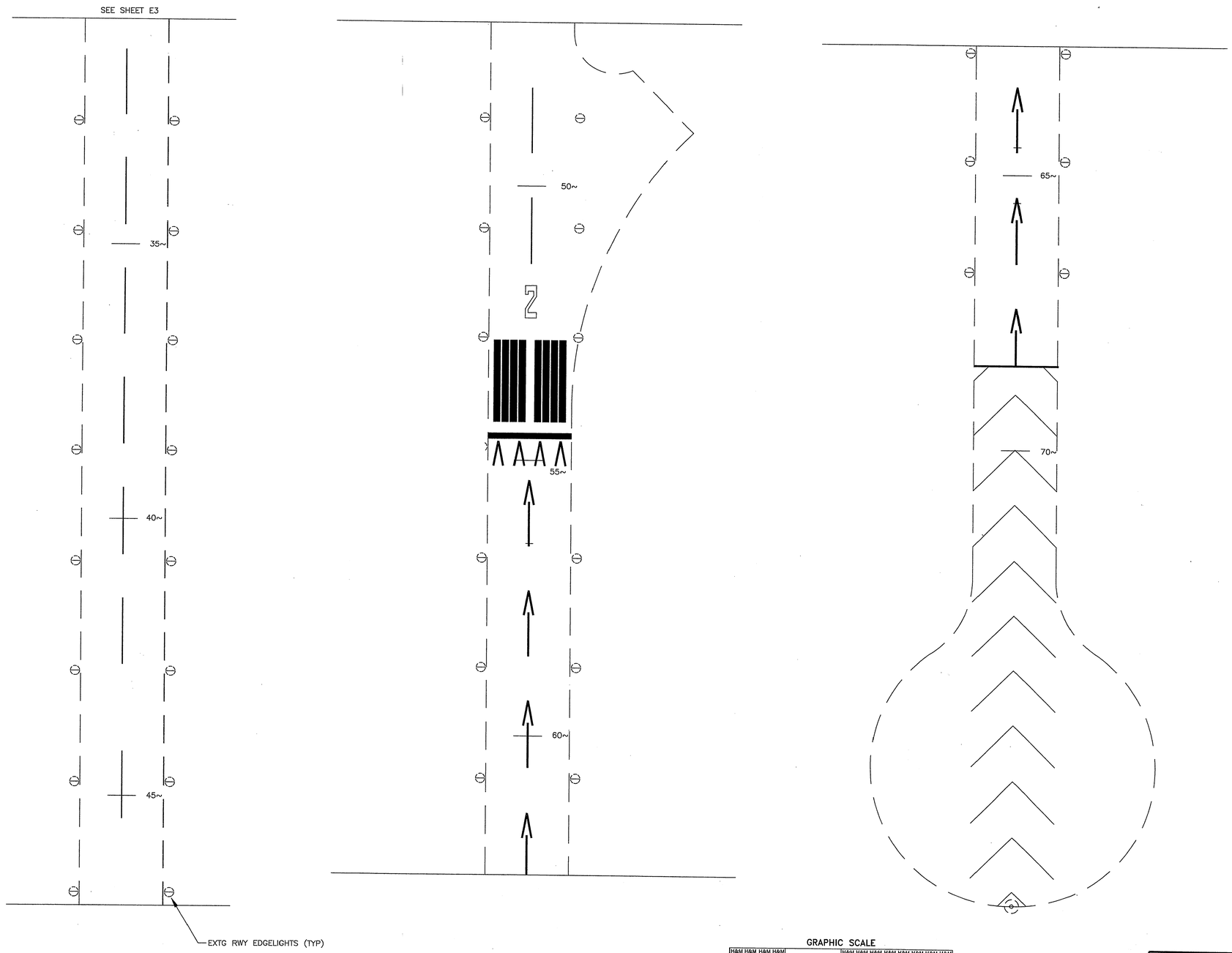

GRAPHIC SCALE

0 100' 200' 400'

NOTE: DO NOT SCALE FROM THESE PLANS–USE DIMENSIONS

HAIGHT & McLAUGHLIN, INC.
CONSULTING ENGINEERS
418 Harris Street, Juneau, Alaska 99801 (907) 586-9788

PATH: P:\YAK\72214\EN\E2.DWG		
PLOT: P:\-LIB\-PLOT\PLOTF.PCP(100) OR PLOTH.PCP(200)		
BY:	DATE:	DESCRIPTION OF CHANGE:

RECORD OF REVISIONS

STATE OF ALASKA
DEPARTMENT OF TRANSPORTATION AND PUBLIC FACILITIES
SOUTHEAST REGION

YAKUTAT — YAKUTAT AIRPORT RUNWAY & TAXIWAY LIGHTING IMPROVEMENTS — ALASKA

AIP NO. 3-02-0327-13-99 ~ PROJECT NO. 67522

EXISTING RUNWAY 2-20 LIGHTING

DESIGNED BY: WFB	PROJECT NO. 67522
DRAWN BY: WFB	DATE: 1999
CHECKED BY:	SHEET E2 OF 15

STATE OF ALASKA 49th B.C. HAIGHT EE 4800 REGISTERED PROFESSIONAL ENGINEER

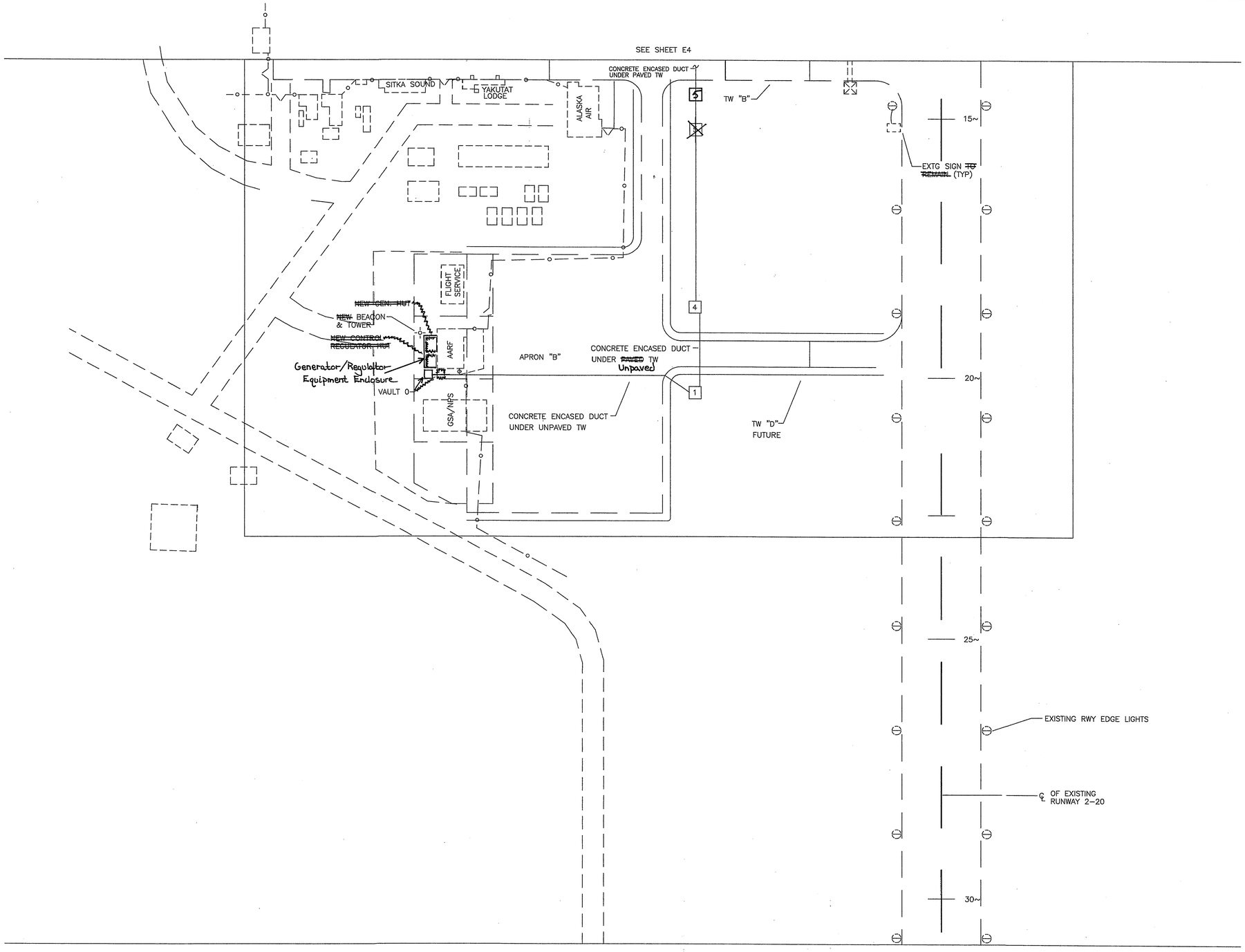

GRAPHIC SCALE

0 100' 200' 400'

NOTE: DO NOT SCALE FROM THESE PLANS-USE DIMENSIONS

HAIGHT & McLAUGHLIN, INC.
CONSULTING ENGINEERS
418 Harris Street, Juneau, Alaska 99801 (907) 586-9788

PATH:	P:\YAK\72214\ENIE3.DWG	
PLOT:	P:\-LIB\-PLOT\PLOTF.PCP(100) OR PLOTH.PCP(200)	
BY:	DATE:	DESCRIPTION OF CHANGE:
RBS	2/15/00	SHOW CONCRETE PAVEMENT PATCHES

RECORD OF REVISIONS

STATE OF ALASKA
DEPARTMENT OF TRANSPORTATION AND PUBLIC FACILITIES
SOUTHEAST REGION

YAKUTAT — ALASKA

YAKUTAT AIRPORT RUNWAY & TAXIWAY LIGHTING IMPROVEMENTS

AIP NO. 3-02-0327-13-99 ~ PROJECT NO. 67522

RUNWAY 2-20 LIGHTING PLAN
TAXIWAYS "B", "C" & "D"/APRON "B"

DESIGNED BY: WFB	PROJECT NO. 67522
DRAWN BY: WFB	DATE: 1999
CHECKED BY:	SHEET E3 OF 15

STATE OF ALASKA 49th REGISTERED PROFESSIONAL ENGINEER B.C. HAIGHT EE 4800

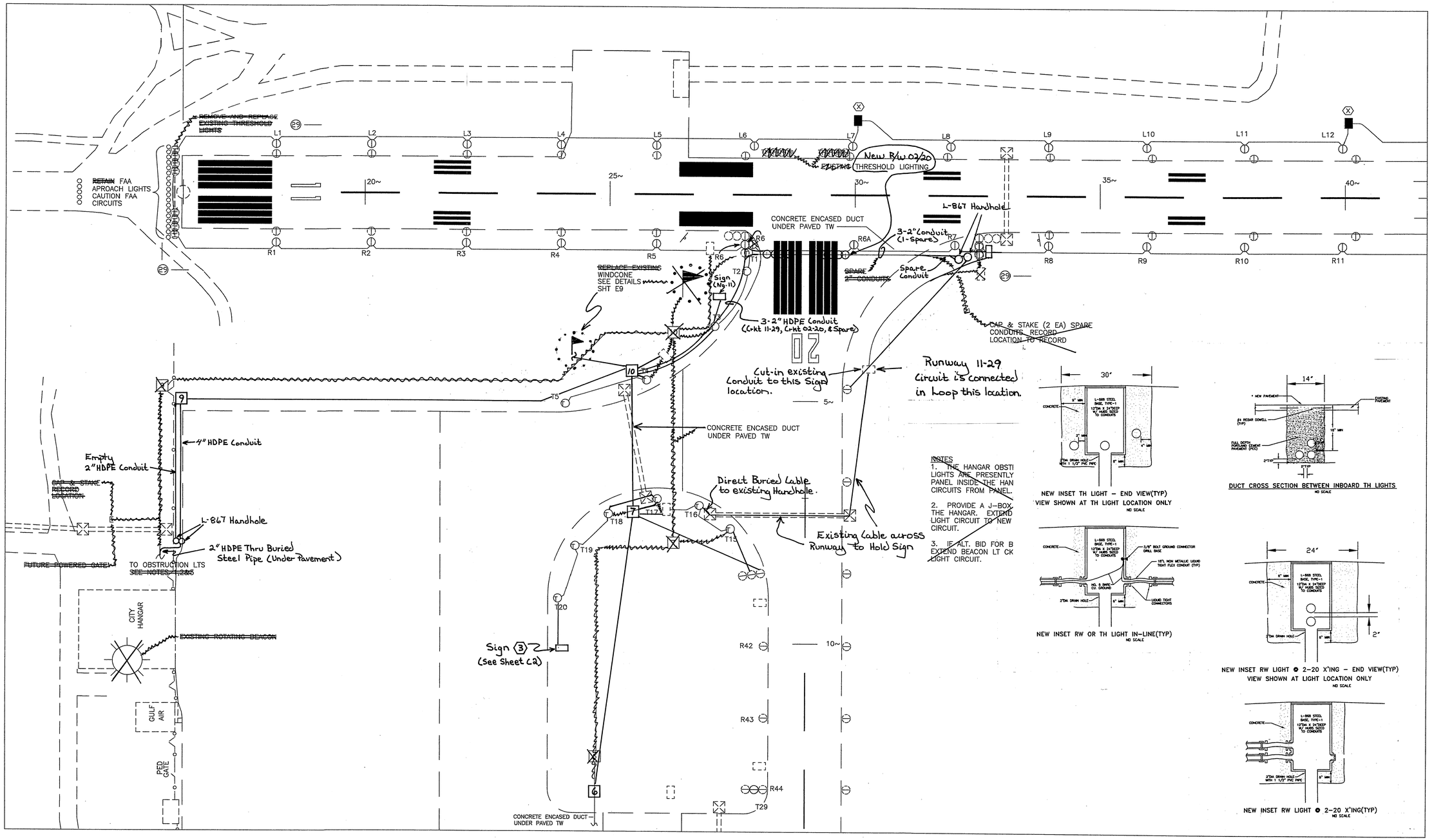

GRAPHIC SCALE

0 100' 200' 400'

NOTE: DO NOT SCALE FROM THESE PLANS-USE DIMENSIONS

HAIGHT & McLAUGHLIN, INC.
CONSULTING ENGINEERS
418 Harris Street, Juneau, Alaska 99801 (907) 586-9788

PATH:	P:\YAK\72214\EN\E4.DWG	
PLOT:	P:\-LIB\-PLOT\PLOTF.PCP(100) OR PLOTH.PCP(200)	
BY:	DATE:	DESCRIPTION OF CHANGE:
RBS	2/15/00	SHOW CONCRETE PAVEMENT PATCHES

RECORD OF REVISIONS

STATE OF ALASKA
DEPARTMENT OF TRANSPORTATION AND PUBLIC FACILITIES
SOUTHEAST REGION

YAKUTAT — ALASKA

YAKUTAT AIRPORT RUNWAY & TAXIWAY LIGHTING IMPROVEMENTS
AIP NO. 3-02-0327-13-99 ~ PROJECT NO. 67522

RUNWAYS 11-29 & 2-20 LIGHTING PLAN TAXIWAY "A" & APRON "A"

DESIGNED BY: WFB	PROJECT NO. 67522
DRAWN BY: WFB	DATE: 1999
CHECKED BY:	SHEET E4 OF 15

STATE OF ALASKA 49th B.C. HAIGHT EE 4800 REGISTERED PROFESSIONAL ENGINEER

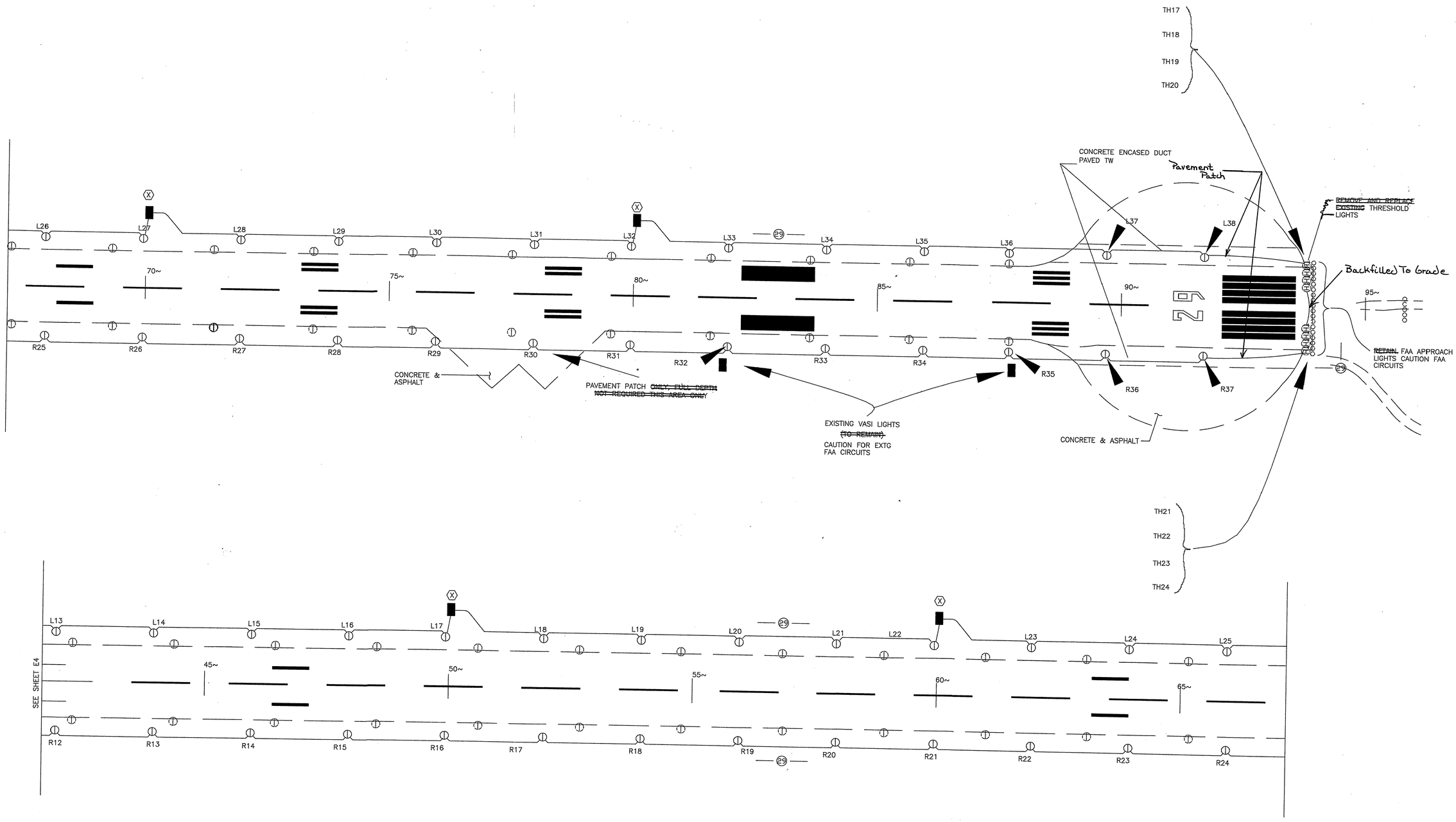

NOTE: DO NOT SCALE FROM THESE PLANS–USE DIMENSIONS

HAIGHT & McLAUGHLIN, INC.
CONSULTING ENGINEERS
418 Harris Street, Juneau, Alaska 99801 (907) 586-9788

PATH:	P:\YAK\72214\ENIE5.DWG	
PLOT:	P:\-LIB\-PLOT\PLOTF.PCP(100) OR PLOTH.PCP(200)	
BY:	DATE:	DESCRIPTION OF CHANGE:
RBS	2/15/00	SHOW CONCRETE PAVEMENT PATCH

RECORD OF REVISIONS

STATE OF ALASKA
DEPARTMENT OF TRANSPORTATION AND PUBLIC FACILITIES
SOUTHEAST REGION

YAKUTAT — YAKUTAT AIRPORT RUNWAY & TAXIWAY LIGHTING IMPROVEMENTS — ALASKA

AIP NO. 3-02-0327-13-99 ~ PROJECT NO. 67522

RUNWAY 11-29 LIGHTING PLAN

DESIGNED BY: WFB	PROJECT NO. 67522
DRAWN BY: WFB	DATE: 1999
CHECKED BY:	SHEET E5 OF 15

STATE OF ALASKA 49th B.C. HAIGHT EE 4800 REGISTERED PROFESSIONAL ENGINEER

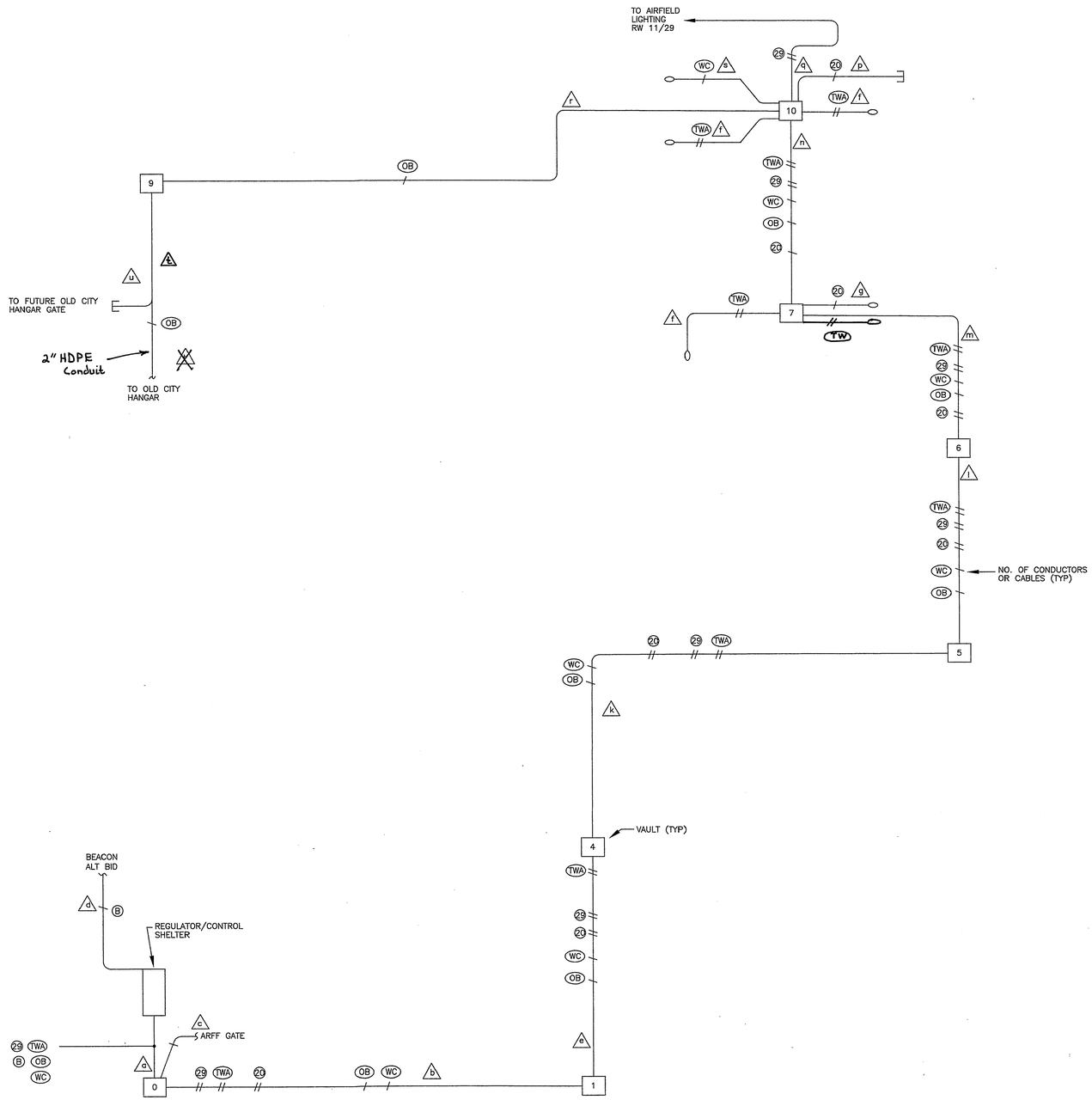

NOTE: DO NOT SCALE FROM THESE PLANS–USE DIMENSIONS

HAIGHT & McLAUGHLIN, INC.
CONSULTING ENGINEERS
418 Harris Street, Juneau, Alaska 99801 (907) 586-9788

PATH: P:\YAK\72214\ENIE12.DWG		
PLOT: P:\-LIB\-PLOT\PLOTF.PCP(110) OR PLOTH.PCP(220)		
BY:	DATE:	DESCRIPTION OF CHANGE:
RECORD OF REVISIONS		

STATE OF ALASKA
DEPARTMENT OF TRANSPORTATION AND PUBLIC FACILITIES
SOUTHEAST REGION

YAKUTAT — ALASKA

YAKUTAT AIRPORT RUNWAY & TAXIWAY LIGHTING IMPROVEMENTS
AIP NO. 3-02-0327-13-99 ~ PROJECT NO. 67522

CIRCUIT DIAGRAM–AIRPORT LIGHTING

DESIGNED BY: WFB	PROJECT NO. 67522
DRAWN BY: WFB	DATE: 1999
CHECKED BY:	SHEET E6 OF 17

STATE OF ALASKA 49th B.C. HAIGHT EE 4600 REGISTERED PROFESSIONAL ENGINEER

CABLING SCHEDULE

DESIGNATION	RACEWAY	CIRCUIT	ROUTE
a	4" GRS	TWA 29	REGULATOR SHELTER TO VAULT 0
	4" GRS	20	
	4" GRS	OB	
	4" GRS	WC	
	4" GRS	SPARE	
	4" GRS	SPARE	
b	4" HDPE	29 TWA	VAULY 0 TO VAULT 1 BENEATH APRON B
	4" HDPE	20	
	4" HDPE	OB	
	4" HDPE	WC	
	4" HDPE	SPARE	
	4" HDPE	SPARE	
c	2" HDPE	SPARE	VAULT 0 TO FUTURE POWERED GATE OPERATOR
d	2" GRS	B	CONTROL PANEL TO BEACON
e	4" HDPE	TWA 29	VAULT 1 TO VAULT 4 DENEATH TAXIWAY D
	4" HDPE	20	
	4" HDPE	OB	
	4" HDPE	WC	
	4" HDPE	SPARE	
	4" HDPE	SPARE	
f	2" HDPE	TWA	ALONG APRON A AND TAXIWAY A
g	2" HDPE		VAULT 7 TO RUNWAY 2/20
h	FUTURE		
i	FUTURE		
j	FUTURE		

DESIGNATION	RACEWAY	CIRCUIT	ROUTE
k	4" HDPE	29 TWA	VAULT 4 TO VAULT 5 BETWEEN TAXIWAYS B & D
	4" HDPE	20	
	4" HDPE	OB	
	4" HDPE	WC	
	4" HDPE	SPARE	
	4" HDPE	SPARE	
l	4" HDPE	TWA 29	VAULT 5 TO VAULT 6 BENEATH TAXIWAY B
	4" HDPE	20	
	4" HDPE	OB	
	4" HDPE	WC	
	4" HDPE	SPARE	
	4" HDPE	SPARE	
m	4" HDPE	29 TWA	VAULT 6 TO VAULT 7 BETWEEN TAXIWAYS A & B
	4" HDPE	OB	
	4" HDPE	WC	
	4" HDPE	20	
	4" HDPE	SPARE	
n	4" HDPE	29 TWA	VAULT 7 TO VAULT 10 BENEATH TAXIWAY A
	4" HDPE	OB	
	4" HDPE	WC	
	4" HDPE	20	
	4" HDPE	SPARE	
o	FUTURE		
p	2" HDPE	SPARE	VAULT 10 TO SE CORNER OF RW INTERSECTION
	2" HDPE	~~SPARE~~ 20	VAULT 10 TO RUNWAY 2-20 THRESHOLD AND EDGE LIGHTS
q	2" HDPE	29	AROUND RUNWAY 11/29 (NOTE: PCC-ENCASED FOR THRESHOLDS)

DESIGNATION	RACEWAY	CIRCUIT	ROUTE
r	4" HDPE	OB	VAULT 10 TO VAULT 9
	4" HDPE	SPARE	
	4" HDPE	SPARE	
s	2" HDPE	WC	VAULT 10 TO WINDCONE
t	4" HDPE ~~(PCC-ENCASED UPT OF HANGAR)~~	OB	VAULT 9 TO ~~JUNCTION BOX ON SIDE OF~~ Handhole OLD CITY HANGAR (2" HDPE Handhole to)
u	2" HDPE		VAULT 9 TO Handhole (FUTURE POWERED GATE AT OLD CITY HANGAR)

1. USE WATERTIGHT SEALING MATERIAL FOR PLUGGING CONDUITS. PLUG CONDUITS AT BOTH ENDS UNLESS OTHERWISE NOTED.
2. WHEN REMOVING CONDUIT FROM AN EXISTING LIGHT BASE TO REMAIN, PLUG CONDUIT HUB IN LIGHT BASE.

CIRCUIT SCHEDULE

DESIGNATION	CABLE/CONDUCTOR	PURPOSE	REMARKS
20	NO. 6, 5 kV CLASS B	RUNWAY 02/20 LTS	(FUTURE)
29	NO. 6, 5 kV CLASS B	RUNWAY 11/29 LTS	
TWA	NO. 6, 5 kV CLASS B	TAXIWAYS A & C, APRONS A & B	YEAR AROUND OPERATION
TWB	NO. 6, 5 kV CLASS B	TAXIWAYS B & D	OPERATE IN CONJUNCTION w/ RUNWAY 02/20 (FUTURE)
B	3 NO. 8, 1 NO. 10 GND TYPE G OR W CABLE	BEACON	
G1	2 NO. 8, 1 NO. 10 GND TYPE G OR W CABLE	POWERED GATE	GATE AT OLD CITY HANGAR (FUTURE)
G2	3 NO. 8, 1 NO. 10 GND TYPE G OR W CABLE	POWERED GATE	GATE AT ARFF BLDG (FUTURE)
G3	3 NO. 8, TYPE G OR W CABLE	POWERED GATE	GATE AT DELTA WESTERN APRON A (FUTURE)
OB	2 NO. 8, 1 NO. ~~10~~ 8 GND TYPE G OR W CABLE	OBSTRUCTION LTS	OLD CITY HANGAR & NEW BEACON (ALT BID)
WC	2 NO. 8, 1 NO ~~10~~ 8 GND TYPE G OR W CABLE	WINDCONE	

VAULT SCHEDULE

DESIGNATION	TYPE	STATION (RW -20)	OFFSET
0	1	19 + 96	810 L R
1	1	20 + 78	456 L R
2	(FUTURE)	(FUTURE)	(FUTURE)
3	(FUTURE)	(FUTURE)	(FUTURE)
4	1	18 + 65	456 L R
5	1	~~18~~ 14 + ~~54~~ 75	456 L R
6	1	12 + 35	416 L R
7	1	7 + 92	257 L R
8	(FUTURE)	(FUTURE)	(FUTURE)
9	~~1~~ 1	4 + 73	1301 L R
10	1	3 + 59	257 L R

HAIGHT & McLAUGHLIN, INC.
CONSULTING ENGINEERS
418 Harris Street, Juneau, Alaska 99801 (907) 586-9788

STATE OF ALASKA 49th B.C. HAIGHT EE 4800 REGISTERED PROFESSIONAL ENGINEER

PATH: P:\YAK\72214\ENE6.DWG		
PLOT: P:\-LIB\-PLOT\PLOTF.PCP(100) OR PLOTH.PCP(200)		
BY:	DATE:	DESCRIPTION OF CHANGE:

RECORD OF REVISIONS

STATE OF ALASKA
DEPARTMENT OF TRANSPORTATION AND PUBLIC FACILITIES
SOUTHEAST REGION

YAKUTAT — YAKUTAT AIRPORT RUNWAY & TAXIWAY LIGHTING IMPROVEMENTS — ALASKA
AIP NO. 3-02-0327-13-99 ~ PROJECT NO. 67522

CONDUIT/CABLE SCHEDULE

DESIGNED BY: WFB	PROJECT NO. 67522
DRAWN BY: WFB	DATE: 1999
CHECKED BY:	SHEET E7 OF 15

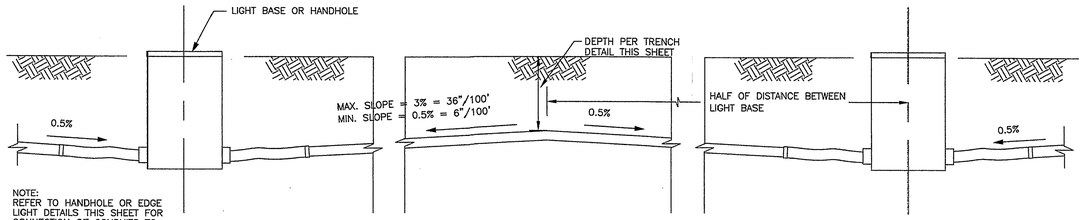

NOTE:
REFER TO HANDHOLE OR EDGE LIGHT DETAILS THIS SHEET FOR CONNECTION OF CONDUITS TO HANDHOLES OR L-867 BASES.

DETAIL: CONDUIT INSTALLATION (TYP)

NO SCALE

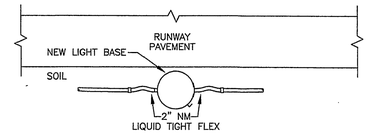

DETAIL: LIGHT BASE & CONDUIT INSTALLATION (TYP)

NO SCALE

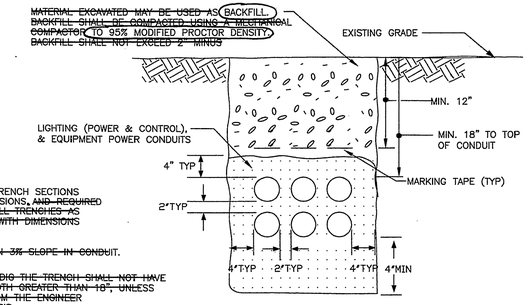

~~MATERIAL EXCAVATED MAY BE USED AS~~ BACKFILL. ~~BACKFILL SHALL BE COMPACTED USING A MECHANICAL COMPACTOR~~ TO 95% MODIFIED PROCTOR DENSITY. ~~BACKFILL SHALL NOT EXCEED 2" MINUS~~

NOTES:
1. THESE ARE TYPICAL TRENCH SECTIONS SHOWING MINIMUM DIMENSIONS. ~~AND REQUIRED MATERIALS. CONFIGURE ALL TRENCHES AS NECESSARY TO COMPLY WITH DIMENSIONS SHOWN.~~

~~2. ALLOW NO MORE THAN 3% SLOPE IN CONDUIT.~~

~~3. EQUIPMENT USED TO DIG THE TRENCH SHALL NOT HAVE A BUCKET OR BLADE WIDTH GREATER THAN 18", UNLESS ALLOWED IN WRITING FROM THE ENGINEER ON A CASE BY CASE BASIS.~~

NATIVE SURFACE

NO SCALE

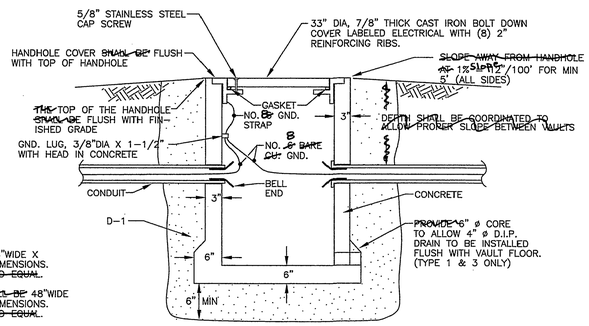

NOTE:
1. TYPE 1 HANDHOLE: ~~SHALL BE~~ 48"WIDE X 48"LONG X 48"DEEP OUTSIDE DIMENSIONS. UTILIVAULT 444-LA ~~OR APPROVED EQUAL~~.
2. TYPE 3 AND 4 HANDHOLES: ~~SHALL BE~~ 48"WIDE 48"LONG X 36"DEEP OUTSIDE DIMENSIONS. UTILIVAULT 443-LA ~~OR APPROVED EQUAL~~.
3. ~~THE~~ COVERS FOR HAND HOLES ~~SHALL BE~~ LABLELED "ELECTRICAL".

TYPE 1, 2, 3 & 4 VAULT (TYP)

NO SCALE

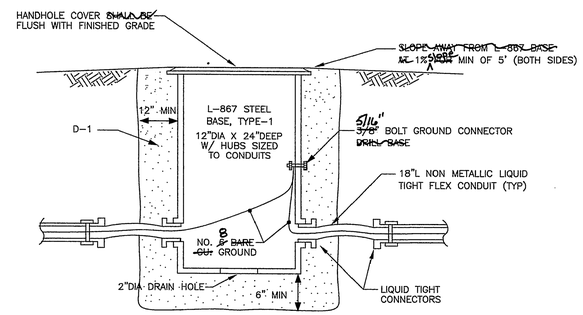

TYPE 2 HANDHOLE (TYP)

NO SCALE

DETAILS:HANDHOLES/VAULTS

* NOTE:
1. NEW PAVEMENT PATCH MATERIAL ~~SHALL BE~~ PORTLAND CEMENT (PCC) PAVEMENT. CONCRETE ~~SHALL BE~~ FULL DEPTH
2. FOR PORTLAND CEMENT CONCRETE (PCC) PAVEMENTS: ~~PROVIDE~~ NO 4 REBAR DIAMETER BY 1'-2" LONG DOWELS (0'-7" PENETRATION INTO EXISTING PCC PAVEMENT-BOTH SIDES STAGGERED) 18" ON CENTERS, ~~EVASE~~ AT MID HEIGHT OF SLAB DEPTH. GREASED DRILLED HOLE HALF OF DOWEL LENGTH. ~~AND PLACE IN HOLE.~~

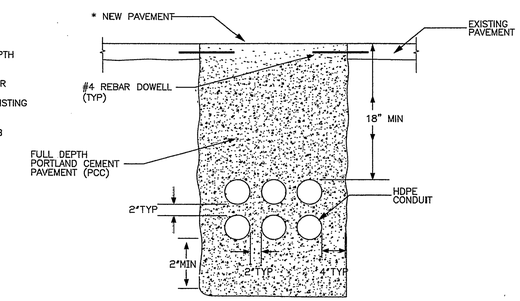

BELOW PAVED TAXIWAYS & RUNWAYS

NO SCALE

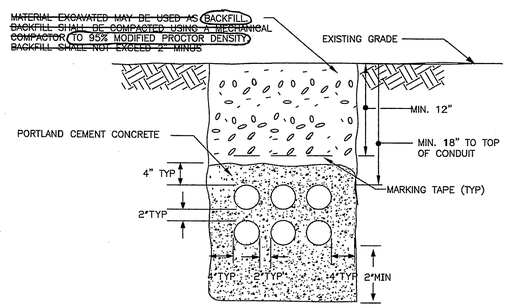

~~MATERIAL EXCAVATED MAY BE USED AS~~ BACKFILL. ~~BACKFILL SHALL BE COMPACTED USING A MECHANICAL COMPACTOR~~ TO 95% MODIFIED PROCTOR DENSITY. ~~BACKFILL SHALL NOT EXCEED 2" MINUS~~

BELOW UNPAVED TAXIWAYS

NO SCALE

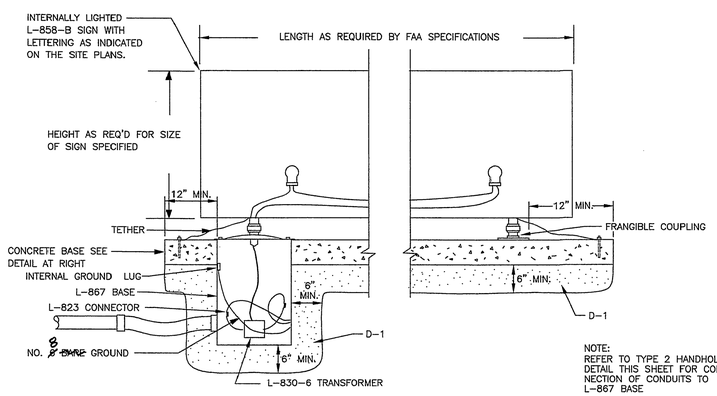

SIDE VIEW

NOTE:
REFER TO TYPE 2 HANDHOLE DETAIL THIS SHEET FOR CONNECTION OF CONDUITS TO L-867 BASE

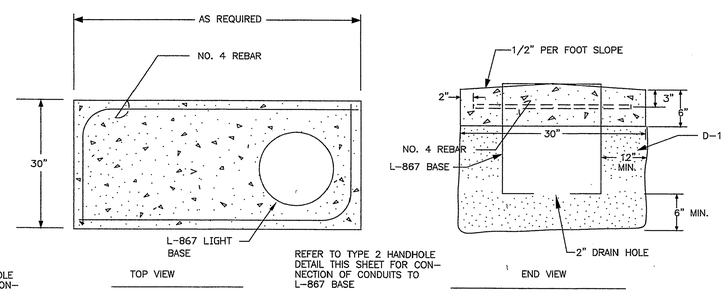

REFER TO TYPE 2 HANDHOLE DETAIL THIS SHEET FOR CONNECTION OF CONDUITS TO L-867 BASE

DETAIL - LIGHTED SIGN

NO SCALE

NOTE: DO NOT SCALE FROM THESE PLANS-USE DIMENSIONS

HAIGHT & McLAUGHLIN, INC.
CONSULTING ENGINEERS
418 Harris Street, Juneau, Alaska 99801 (907) 586-9788

PATH: P:\YAK\72214\ENIE7.DWG		
PLOT: P:\-LIB\-PLOT\PLOTF.PCP(1) OR PLOTH.PCP(2)		
BY:	DATE:	DESCRIPTION OF CHANGE:

RECORD OF REVISIONS

STATE OF ALASKA
DEPARTMENT OF TRANSPORTATION AND PUBLIC FACILITIES
SOUTHEAST REGION

YAKUTAT — ALASKA

YAKUTAT AIRPORT RUNWAY & TAXIWAY LIGHTING IMPROVEMENTS
AIP NO. 3-02-0327-13-99 ~ PROJECT NO. 67522

ELECTRICAL DETAILS

DESIGNED BY: WFB	PROJECT NO. 67522
DRAWN BY: WFB	DATE: 1999
CHECKED BY:	SHEET E8 OF 15

STATE OF ALASKA 49th B.C. HAIGHT EE 4800 REGISTERED PROFESSIONAL ENGINEER

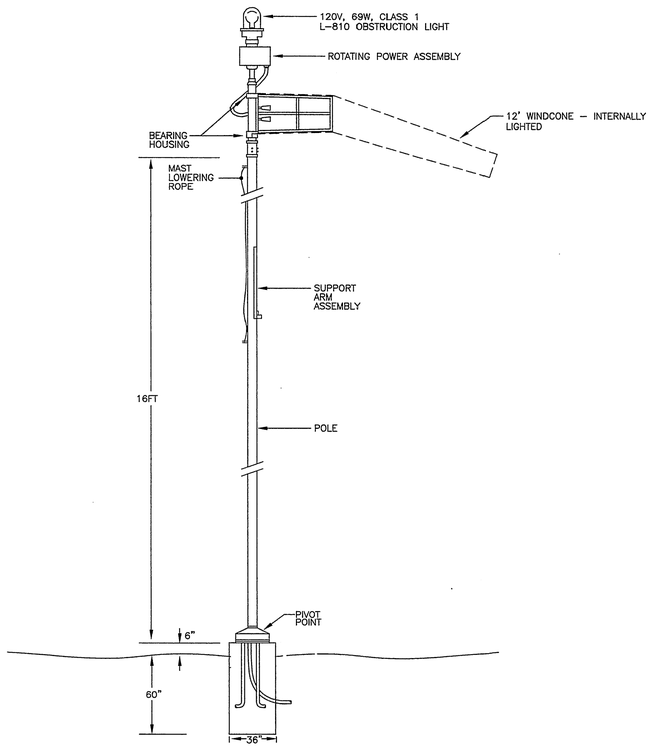

ELEVATION –WINDCONE (SIZE 2)

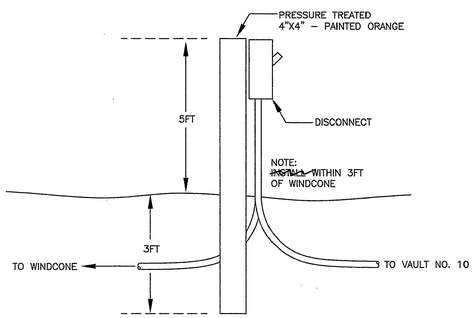

ELEVATION – DISCONNECT

DETAILS – WINDCONE (L-807)

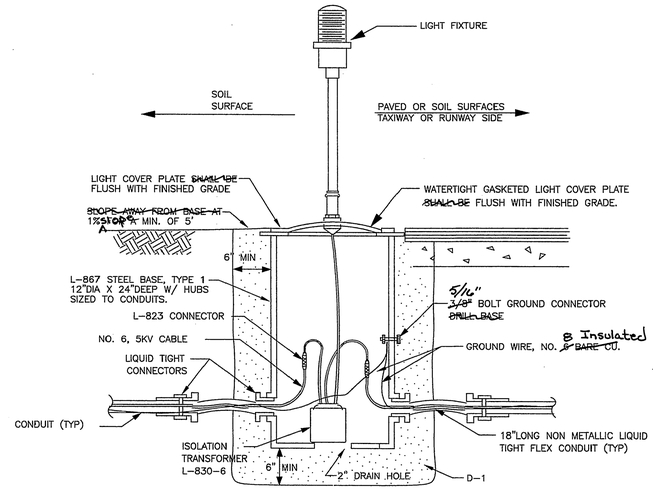

DETAIL: TAXIWAY/RUNWAY EDGE LIGHT (TYP)

NO SCALE

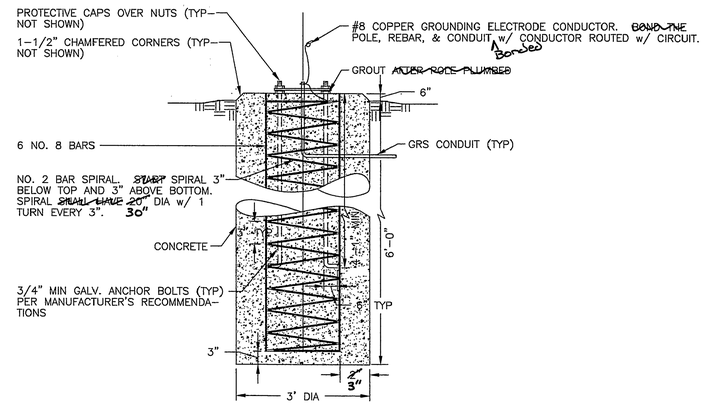

WINDCONE FOUNDATIONS

NOTES:

1. BACKFILL: ~~3/4"~~ N.F.S. SAND & GRAVEL COMPACTED TO 95% MODIFIED PROCTOR DENSITY.
2. ANCHOR BOLTS: ~~TO MEET~~ ATSM–A36 w/ MINIMUM YIELD STRESS OF 36.0 KSI.

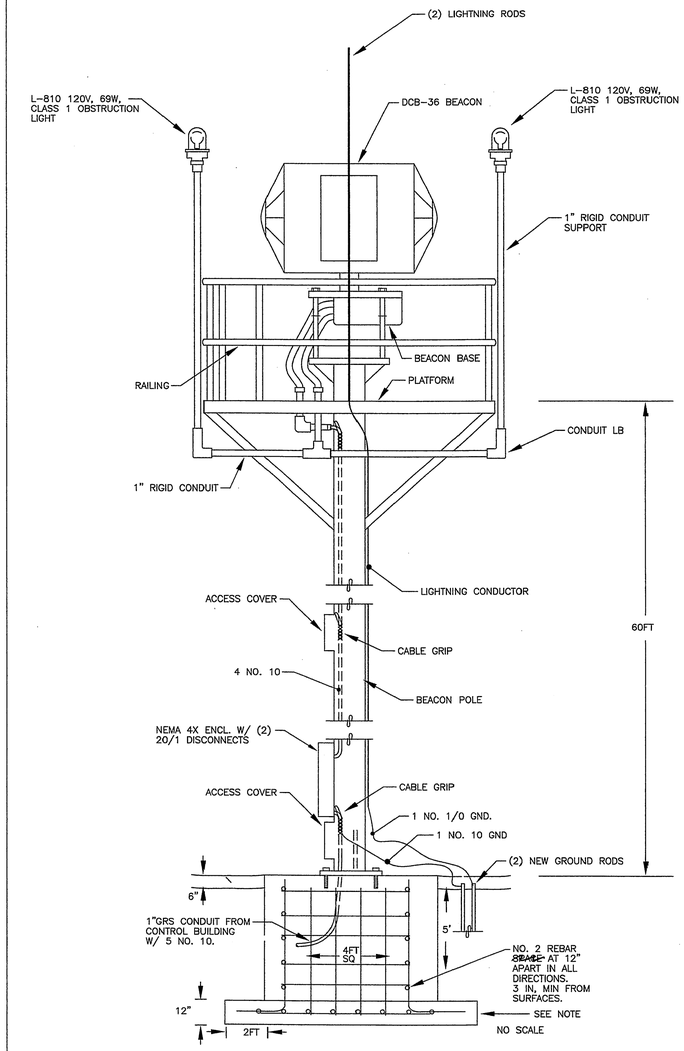

ROTATING BEACON & BEACON POLE DETAIL

NOTE: MINIMUM FOUNDATION SHOWN.
FOUNDATION ~~SHALL~~ SUPPORT STRUCTURE
FOR 100MPH CONTINUOUS WINDS, MIN.
~~COORDINATE W/ STRUCTURE MANUFACTURER.~~

NOTE: DO NOT SCALE FROM THESE PLANS–USE DIMENSIONS

HAIGHT & McLAUGHLIN, INC.
CONSULTING ENGINEERS
418 Harris Street, Juneau, Alaska 99801 (907) 586-9788

PATH: P:\YAK\72214\ENIE9.DWG		
PLOT: P:\-LIB\-PLOT\PLOTF.PCP(1) OR PLOTH.PCP(2)		
BY:	DATE:	DESCRIPTION OF CHANGE:
RECORD OF REVISIONS		

STATE OF ALASKA
DEPARTMENT OF TRANSPORTATION
AND PUBLIC FACILITIES
SOUTHEAST REGION

YAKUTAT — YAKUTAT AIRPORT RUNWAY & TAXIWAY LIGHTING IMPROVEMENTS — ALASKA
AIP NO. 3-02-0327-13-99 ~ PROJECT NO. 67522

WINDCONE DETAILS

DESIGNED BY: WFB	PROJECT NO. 67522
DRAWN BY: WFB	DATE: 1999
CHECKED BY:	SHEET E9 OF 15

STATE OF ALASKA 49th B.C. HAIGHT EE 4800 REGISTERED PROFESSIONAL ENGINEER

PANEL MDP	SIZE	VOLTS/PHASE			MAIN	LOCATION	MOUNT
	225 AMPS	120/240V, 1 PH			LUGS ONLY	GENERATOR/REGULATOR BLD.	SURFACE

CKT NO	DESCRIPTION	BREAKER AMP/POLE	KVA CKT	KVA AØ	KVA BØ	KVA CKT	BREAKER AMP/POLE	DESCRIPTION	CKT NO
1	BUILDING LIGHTING	20/1	1.0	1.0		0.0	30/2	~~SPARE~~ Outside Receptacles	2
3	WIND CONE	20/1	1.0		1.0	0.0		Battery Backup LT/Emerg.	4
5	OBSTRUCTION LIGHTS	20/1	1.0	1.0		0.0	30/2	~~SPARE~~ Ventilation Control	6
7	BEACON	20/2	1.0		1.0	0.0		Block Heater	8
9	Spare @ Beacon	——	1.0	1.0		0.0	20/1	~~SPARE~~ Fan-1	10
11	~~CONTROLS~~ Radio Controller	20/1	0.2		0.4	0.2		BATTERY CHARGER	12
13	~~RADIO CONTROLLER~~ Controls	20/1	0.2	1.4		1.2		~~GENSET BLOCK HEATER~~ Day Tank	14
15	RUNWAY 11/29 LIGHTS	100/2	6.7		7.1	0.4		~~DAY TANK~~ Fan-2	16
17	〃 〃 〃	——	6.7	7.2		0.5	20/1	~~BUILDING RECEPTACLES~~ Spare	18
19	RUNWAY 02/20 LIGHTS	100/2	8.0		9.1	1.1		BUILDING RECEPTACLES	20
21	〃 〃 〃	——	8.0	8.3		0.3		~~VENTILATION FAN #1~~ Spare	22
23	TAXIWAY LIGHTS	50/2	1.5		1.8	0.3		~~VENTILATION FAN #2~~ Spare	24
25	〃 〃	——	1.5	1.8		0.3		~~VENTILATION CONTROLS~~ Spare	26
27	SPARE	50/2	0.0		0.0	0.0		SPARE	28
29	Spare	——	0.0	0.0		0.0		SPARE	30
31	Beacon Heater		0.0		0.0	0.0		SPARE	32
33	Receptacle (under "MDP")		0.0	0.0		0.0	30/2	SPARE	34
35			0.0		0.0	0.0			36
37			0.0	0.0		0.0			38
39			0.0		0.0	0.0			40
41			0.0	0.0		0.0			42
TOTAL CONNECTED LOAD = 42.1 KVA / 175AMPS				21.7	20.4				

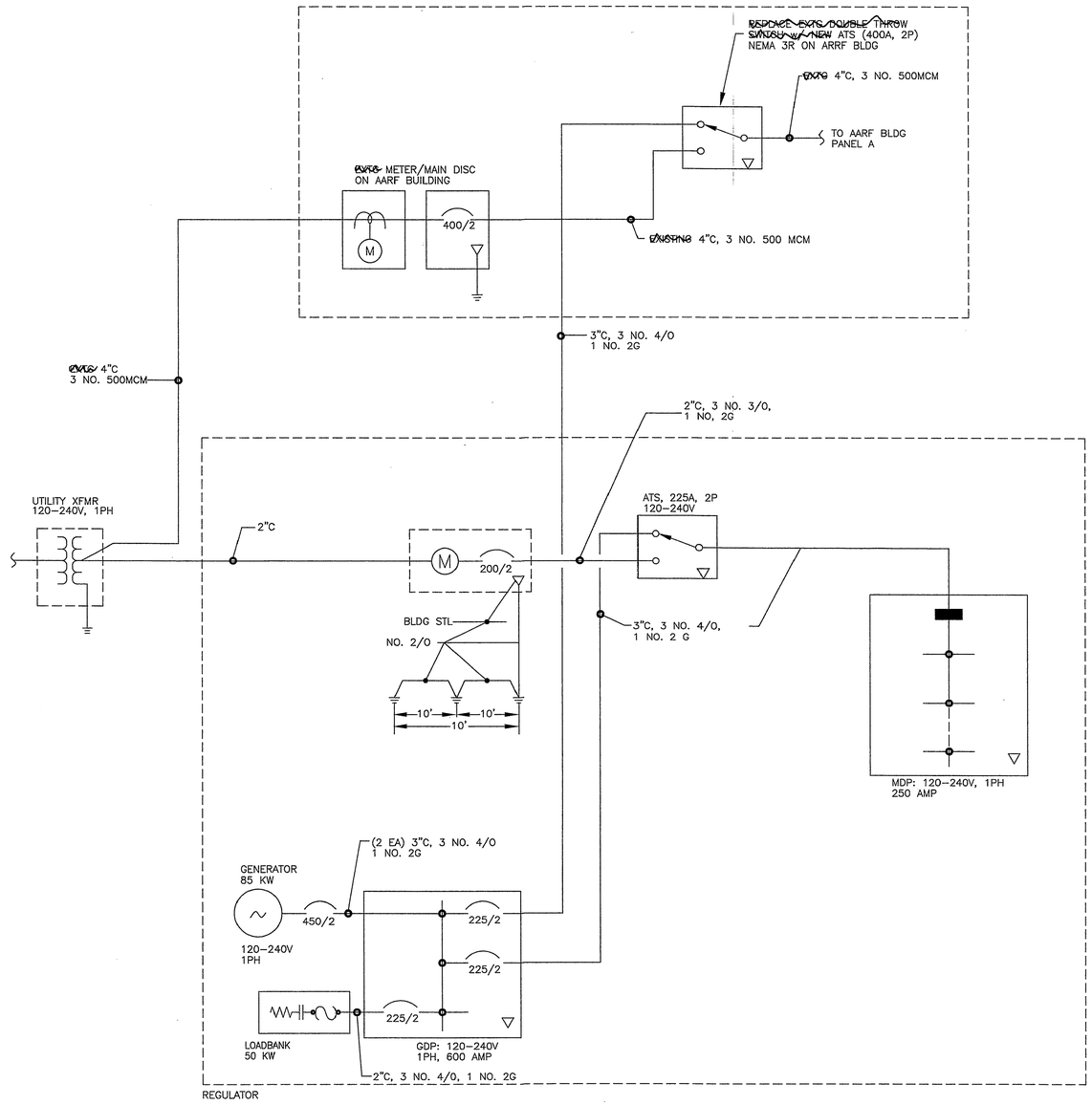

SINGLE LINE DIAGRAM – POWER

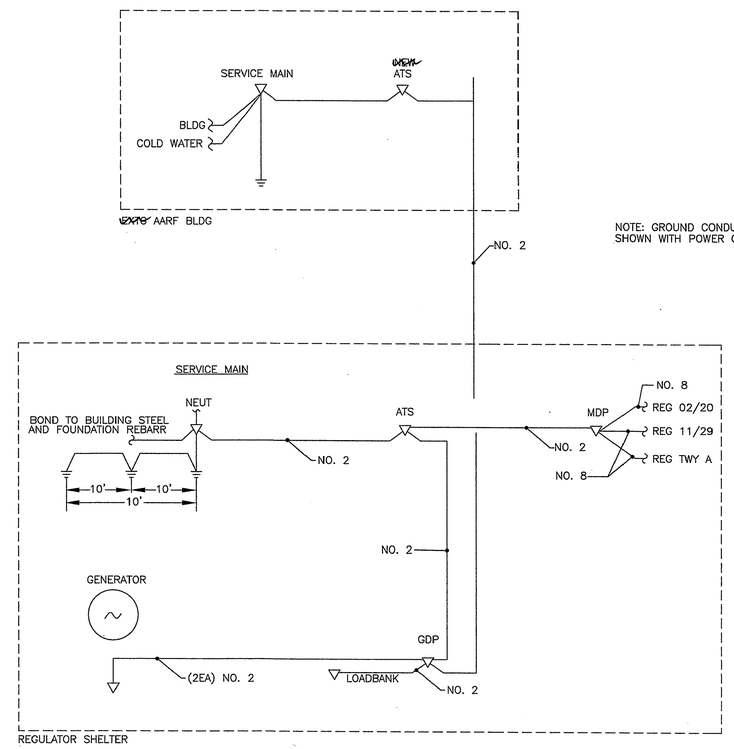

SINGLE LINE DIAGRAM – GROUNDING

NO SCALE

NOTE: GROUND CONDUCTORS SHOWN WITH POWER CIRCUITS.

NOTE: DO NOT SCALE FROM THESE PLANS–USE DIMENSIONS

HAIGHT & McLAUGHLIN, INC.
CONSULTING ENGINEERS
418 Harris Street, Juneau, Alaska 99801 (907) 586–9788

PATH: F:\PROJ...\134...\089...\DRAW...\ELECTRICAL\REV-3-00\89E10R.DWG		
PLOT:		
BY:	DATE:	DESCRIPTION OF CHANGE:
DRP	3/16/00	CHANGE ORDER

RECORD OF REVISIONS

STATE OF ALASKA
DEPARTMENT OF TRANSPORTATION AND PUBLIC FACILITIES
SOUTHEAST REGION

YAKUTAT — YAKUTAT AIRPORT RUNWAY & TAXIWAY LIGHTING IMPROVEMENTS — ALASKA
AIP NO. 3-02-0327-13-99 ~ PROJECT NO. 67522

SINGLE LINE DIAGRAM – POWER

DESIGNED BY: WFB	PROJECT NO. 67522
DRAWN BY: WFB	DATE: 1999
CHECKED BY:	SHEET E10R OF 15

STATE OF ALASKA 49th B.C. HAIGHT EE 4800 REGISTERED PROFESSIONAL ENGINEER

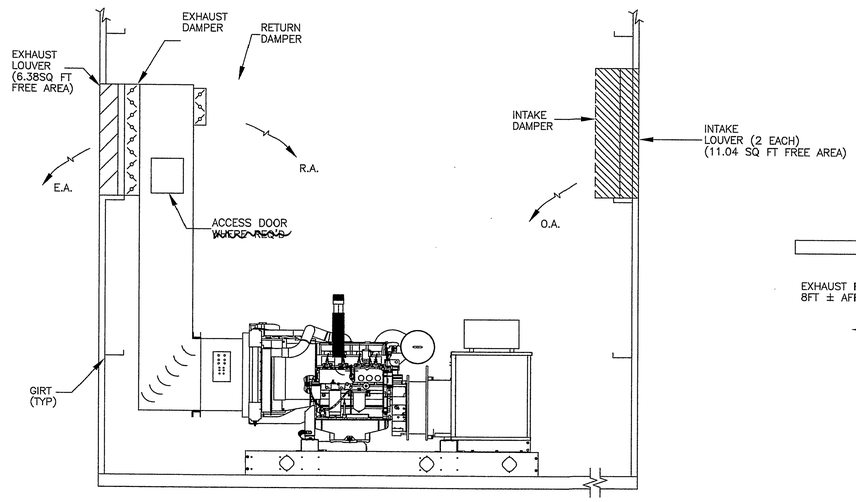

ELEVATION – GENSET

GRAPHIC SCALE

0 2' 4 8'

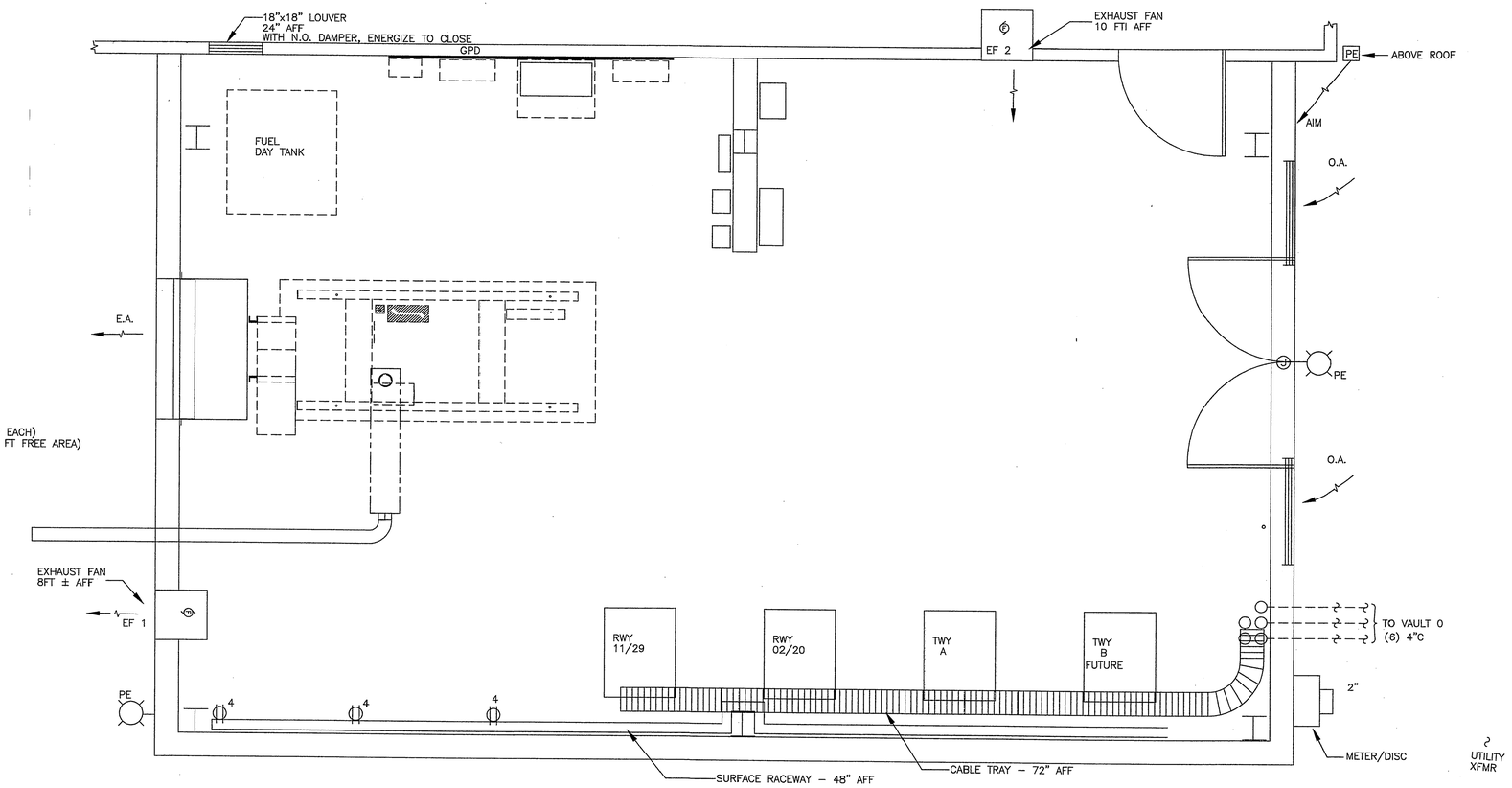

SHELTER FLOOR PLAN

GRAPHIC SCALE

0 2' 4 8'

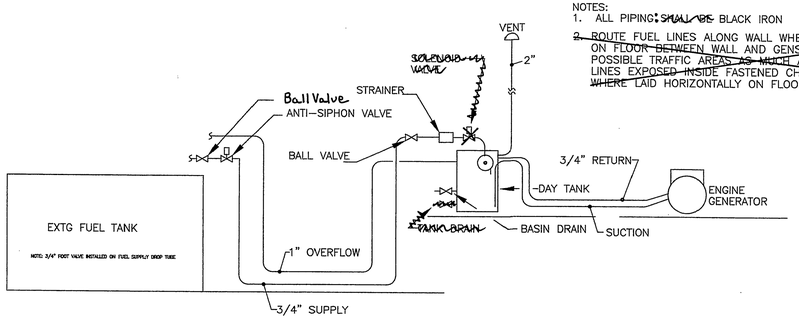

PIPING DIAGRAM – FUEL SYATEM

NOTES:
1. ALL PIPING: ~~SHALL BE~~ BLACK IRON
2. ~~ROUTE~~ FUEL LINES ALONG WALL WHERE POSSIBLE. ~~ROUTE ON FLOOR BETWEEN~~ WALL AND GENSET ~~ENGINE~~ AVOID POSSIBLE TRAFFIC ~~AREAS AS MUCH~~ AS POSSIBLE. INSTALL LINES ~~EXPOSED INSIDE~~ FASTENED CHANNEL ~~ERECTOR WHERE~~ LAID HORIZONTALLY ON FLOOR.

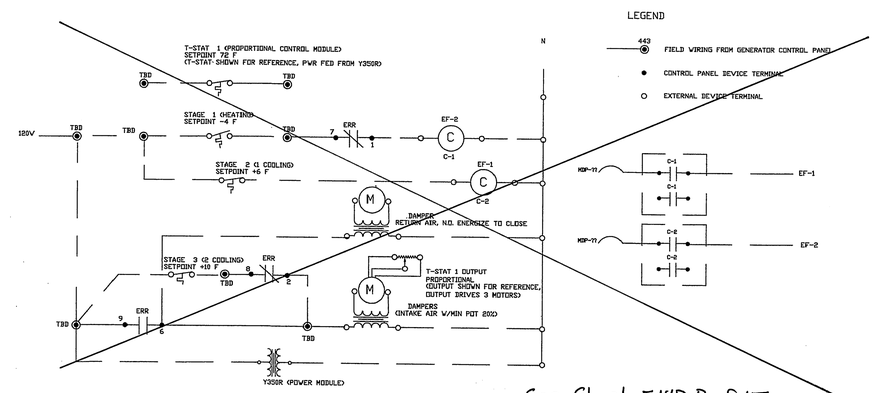

SCHEMATIC DIAGRAM – VENTILATION CONTROLS

NO SCALE

– See Sheet E14R-B of 15

NOTE: DO NOT SCALE FROM THESE PLANS–USE DIMENSIONS

HAIGHT & McLAUGHLIN, INC.
CONSULTING ENGINEERS
418 Harris Street, Juneau, Alaska 99801 (907) 586-9788

PATH: F:\PROJ...\134...\089...\DRAW...\ELECTRICAL\REV-3-00\89E14R.DWG		
PLOT:		
BY:	DATE:	DESCRIPTION OF CHANGE:
DRP	3/17/00	CHANGE ORDER

RECORD OF REVISIONS

STATE OF ALASKA
DEPARTMENT OF TRANSPORTATION AND PUBLIC FACILITIES
SOUTHEAST REGION

YAKUTAT — ALASKA

YAKUTAT AIRPORT RUNWAY & TAXIWAY LIGHTING IMPROVEMENTS
AIP NO. 3-02-0327-13-99 ~ PROJECT NO. 67522

REGULATOR SHELTER

DESIGNED BY: BCH	PROJECT NO. 67522
DRAWN BY: WFB	DATE: 2000
CHECKED BY:	SHEET E14R-A OF 15

STATE OF ALASKA 49th B.C. HAIGHT EE 4800 REGISTERED PROFESSIONAL ENGINEER

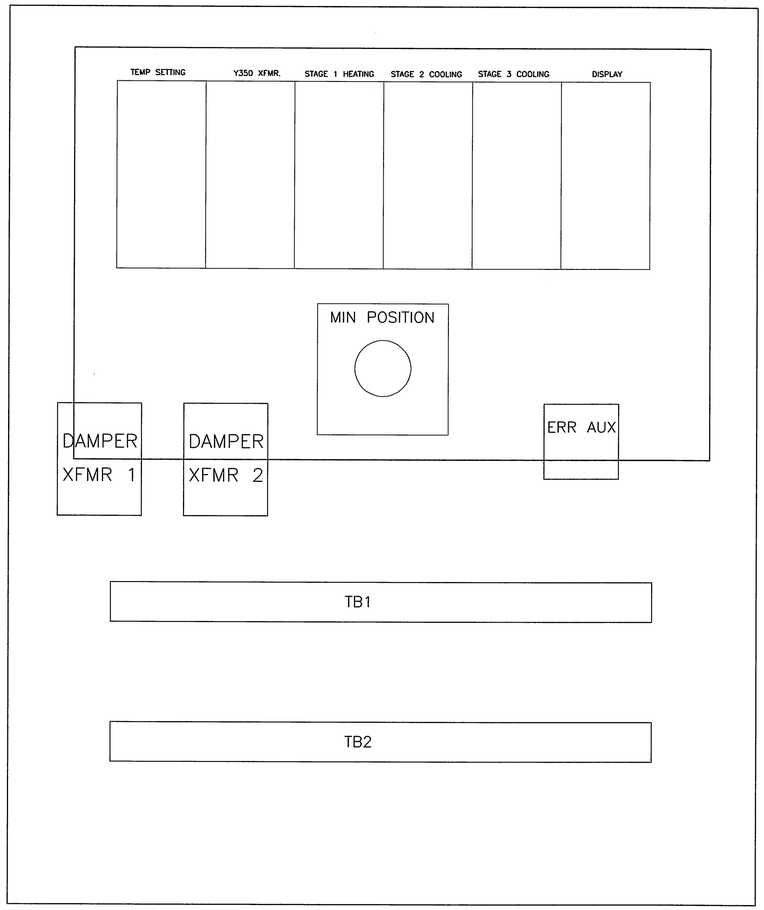

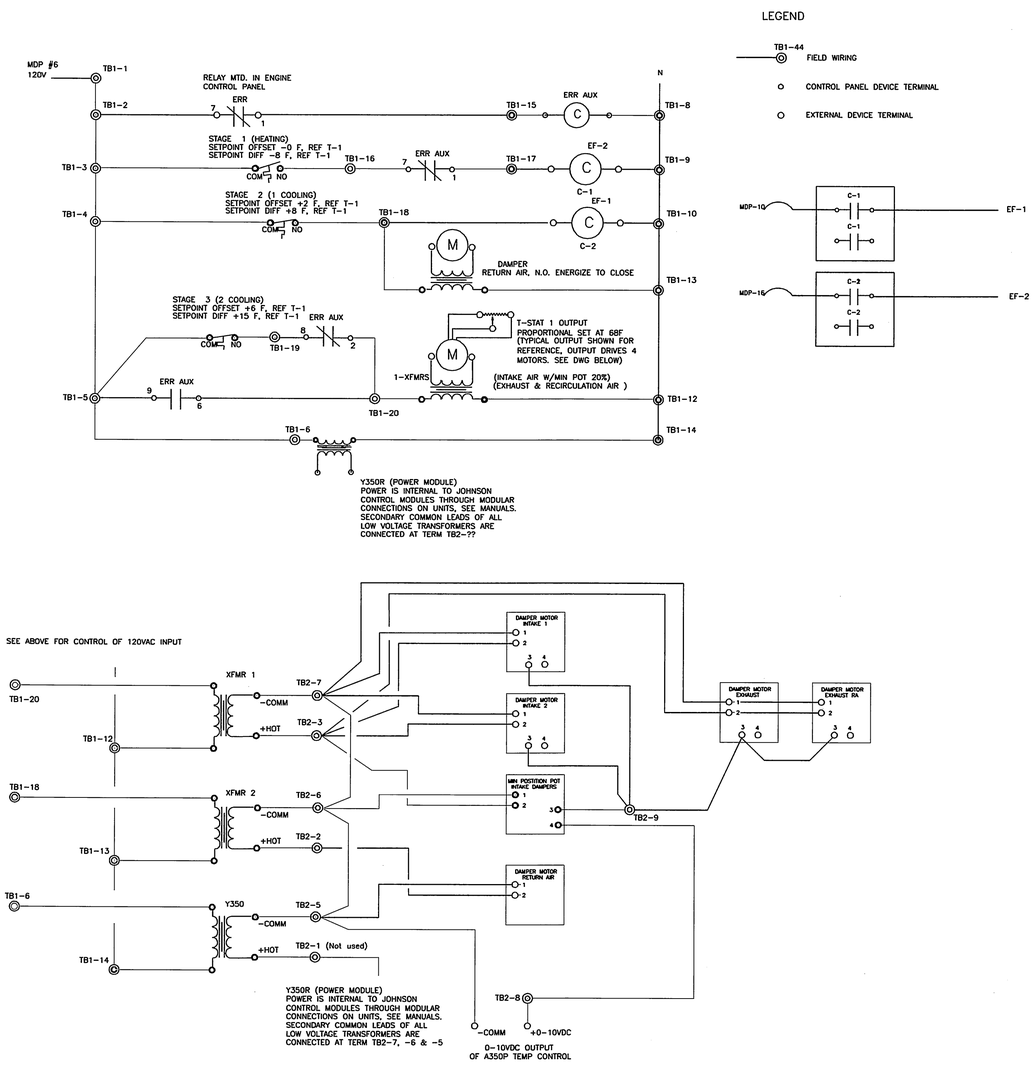

Schematic Diagram — Ventilation Controls

Sheet E14R-B of 15

SWANSON GENERAL CONTRACTORS, INC.
11221 OLIVE LANE
ANCHORAGE, ALASKA 99515
BUS: (907) 344-0022
FAX: (907) 344-0844

AS-BUILT

YAKUTAT AIRPORT RUNWAY & TAXIWAY LIGHTING IMPROVEMENTS

STATE OF ALASKA DOT&PF
YAKUTAT, ALASKA

EQUIPMENT ENCLOSURE - VENTILATION CONTROL

designed
drawn
checked
job no.
date
dwg. title
revisions
ELECTRICAL EQUIPMENT ENCLOSURE - VENT CONTROL

sheet no.

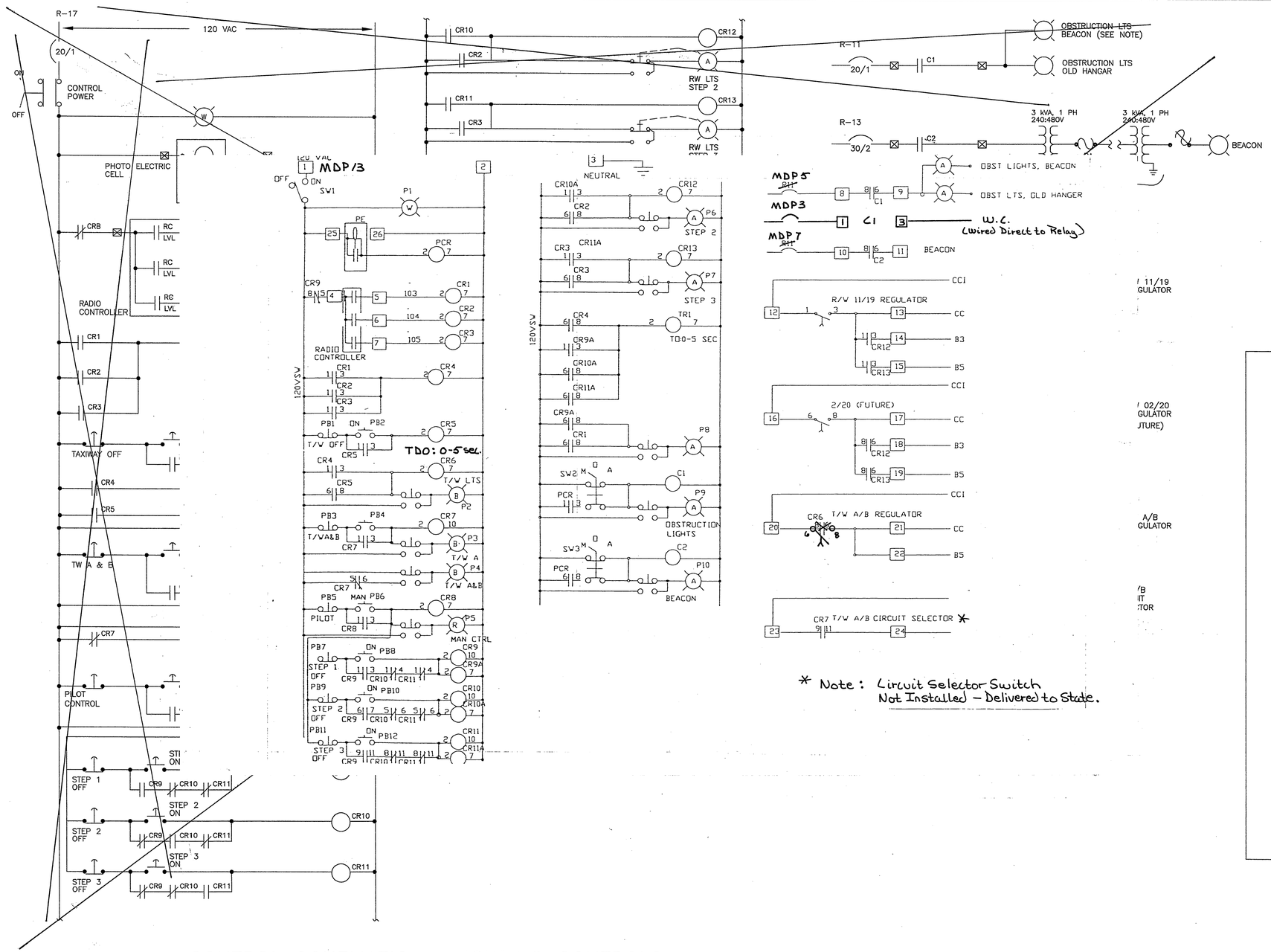

* Note: Circuit Selector Switch Not Installed – Delivered to State.

CONTROL SCHEMATIC – LIGHTING CONTROLS

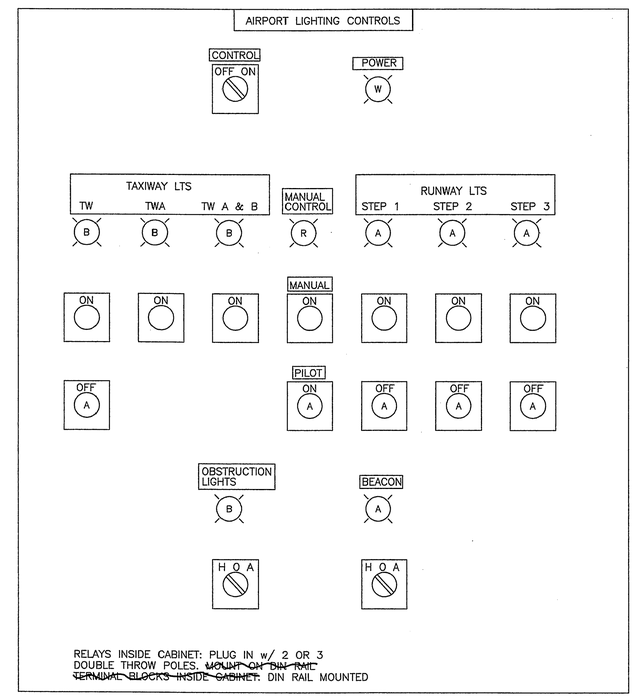

RELAYS INSIDE CABINET: PLUG IN w/ 2 OR 3 DOUBLE THROW POLES. ~~MOUNT ON DIN RAIL TERMINAL BLOCKS INSIDE CABINET.~~ DIN RAIL MOUNTED

PANEL LAYOUT

NOTE: DO NOT SCALE FROM THESE PLANS–USE DIMENSIONS

HAIGHT & McLAUGHLIN, INC.
CONSULTING ENGINEERS
418 Harris Street, Juneau, Alaska 99801 (907) 586-9788

STATE OF ALASKA 49th B.C. HAIGHT EE 4800 REGISTERED PROFESSIONAL ENGINEER

PATH: P:\YAK\72214\EN\E17.DWG		
PLOT: P:\-LIB\-PLOT\PLOTF.PCP(2) OR PLOTH.PCP(4)		
BY:	DATE:	DESCRIPTION OF CHANGE:
RECORD OF REVISIONS		

STATE OF ALASKA
DEPARTMENT OF TRANSPORTATION AND PUBLIC FACILITIES
SOUTHEAST REGION

YAKUTAT — ALASKA

YAKUTAT AIRPORT RUNWAY & TAXIWAY LIGHTING IMPROVEMENTS
AIP NO. 3-02-0327-13-99 ~ PROJECT NO. 67522

AIRPORT LIGHTING CONTROLS

DESIGNED BY: WFB	PROJECT NO. 67522
DRAWN BY: WFB	DATE: 1999
CHECKED BY:	SHEET E15 OF 15

ESTIMATE OF QUANTITIES

ITEM NO.	ITEM	UNIT	QUANTITY
100	MOBILIZTION & DEMOBILIZATION	LUMP SUM	ALL REQ'D.
111	EROSION AND POLLUTION CONTROL	CONTINGENT SUM	ALL REQ'D.
120	DBE ADJUSTMENT	CONTINGENT SUM	ALL REQ'D.
121	CONSTRUCTION SURVEYING BY THE CONTRACTOR	LUMP SUM	ALL REQ'D.
125	ENGINEERING TRANSPORTATION	LUMP SUM	ALL REQ'D.
900d	SEEDING	LUMP SUM	ALL REQ'D
1000-a	NEW REGULATOR, L-829	EACH	3
1000-aa	TYPE 1 HANDHOLE (VAULT)	EACH	8
1000-c	AIRPORT LIGHTING CONTROL PANEL, L-821	EACH	1
1000-cc	REMOVAL OF EXISTING CABLE	LUMP SUM	ALL REQ'D
1000-d	NEW HIGH INTENSITY RUNWAY MARKER LIGHT, L-862	EACH	70
1000-dd	REMOVAL OF EXISTING HANDHOLES	EACH	6
1000-e	NEW RUNWAY THRESHOLD MARKER LIGHT, L-862E	EACH	16
1000-ee	RUNWAY FLUSH MOUNTED EDGE MARKER LIGHT, L-850C	EACH	6
1000-f	NEW TAXIWAY MARKER LIGHT, L-861T	EACH	11
1000-ff	RUNWAY THRESHOLD AND END FLUSH MOUNTED LIGHT, L-850D	EACH	8
1000-hh	4" PCC ENCASED HDPE CONDUIT	LINEAR FOOT	8850
1000-ii	2" PCC ENCASED HDPE CONDUIT	LINEAR FOOT	3475
1000-j	2" HDPE CONDUIT	LINEAR FOOT	17645
1000-k	4" HDPE CONDUIT	LINEAR FOOT	8905
1000-l	UNDERGROUND CABLE #6 AWG, COPPER, 5KV, TYPE "B, L-824	LINEAR FOOT	39550
1000-m	#8 XHHW INSULATED COPPER GROUND CONDUCTOR	LINEAR FOOT	19550
1000-o	REMOVE EXISTING RUNWAY AND TAXIWAY LIGHTS	EACH	99
1000-r	NEW GUIDANCE SIGNS	EACH	1
1000-s	REPLACE EXISTING SIGN LEGENDS	EACH	2
1000-t	NEW RUNWAY DISTANCE REMAINING SIGNS, L858B	EACH	6
1000-u	SERIES PLUG CUTOUTS	EACH	3
1000-v	CIRCUIT SELECTOR SWITCH, L-847	EACH	1
1000-w	RECEIVER-CONTROLLER, TYPE I, ~~L-82?~~ L854	EACH	1
1000-x	EXISTING OBSTRUCTION LIGHT, OLD CITY HANGER	LUMP SUM	ALL REQ'D
1000-y	ILLUMININATED WIND CONE ASSEMBLY	EACH	1
1100	ELECTRICAL SYSTEMS	LUMP SUM	ALL REQ'D
1200-a	ELECTRICAL EQUIPMENT ENCLOSURE	LUMP SUM	ALL REQ'D
	Additive Alt. "A"		
1020	Existing Beacon and New Pole	Lump Sum	All Req'd

GENERAL NOTES

1. XXXX

NOTE: DO NOT SCALE FROM THESE PLANS–USE DIMENSIONS

PATH:	Q:\YAK\72214\EN_EST2.DWG	
PLOT:	P:\-LIB\-PLOT\PLOTF.PCP(1) OR PLOTH.PCP(2)	
BY:	DATE:	DESCRIPTION OF CHANGE:

STATE OF ALASKA
DEPARTMENT OF TRANSPORTATION AND PUBLIC FACILITIES
SOUTHEAST REGION

YAKUTAT — YAKUTAT AIRPORT RUNWAY & TAXIWAY LIGHTING & FENCING IMPROVEMENTS — ALASKA
AIP NO. 3-02-XXXX-XX-98 ~ PROJECT NO. 67522
ESTIMATE OF QUANTITIES

DESIGNED BY: WJH	PROJECT NO. 67522
DRAWN BY: WJH	DATE: 1999
CHECKED BY:	SHEET 2 OF 36

STATE OF ALASKA 49th William J. Holbrook CE-6265 REGISTERED PROFESSIONAL ENGINEER