STATE OF ALASKA

DEPARTMENT OF TRANSPORTATION AND PUBLIC FACILITIES

REVISIONS		
NO.	DATE	DESCRIPTION

STATE	PROJECT DESIGNATION	YEAR	SHEET NO.	TOTAL 'A' SHEETS
ALASKA	0001422/ Z524610000	2017	A1	A4
			PLAN SET TOTAL	31

CDS ROUTE: 110150	MILEPOINT: 0.00 TO 0.489
LATITUDE: 59°38'44"N	LONGITUDE: 151°31'30"W

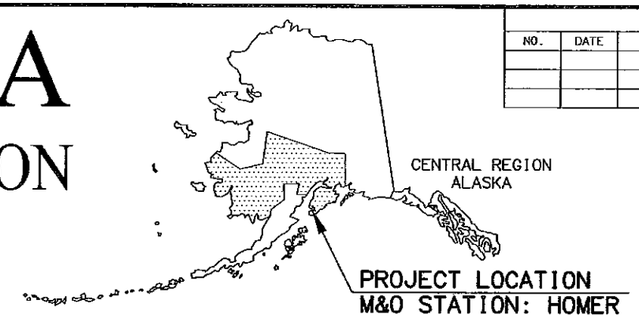

PROJECT SUMMARY		
ROADWAY	WIDTH	LENGTH
LAKE STREET	48'-64'	0.489 MILES

DESIGN DESIGNATIONS	
	LAKE STREET
FUNCTIONAL CLASS	MAJOR COLLECTOR
AADT (2012)	5,210
AADT (2035)	6,359
V (MPH)	30
DHV (2012)	10.6%
DHV (2035)	10.6%
T (%)	8.37%
DIRECTIONAL DISTRIBUTION	45/55
ESALS	N/A

PROPOSED HIGHWAY PROJECT

HOMER LAKE STREET REHABILITATION
PROJECT NO. Z524610000

GRADING, DRAINAGE, PAVING, SIGNING AND STRIPING

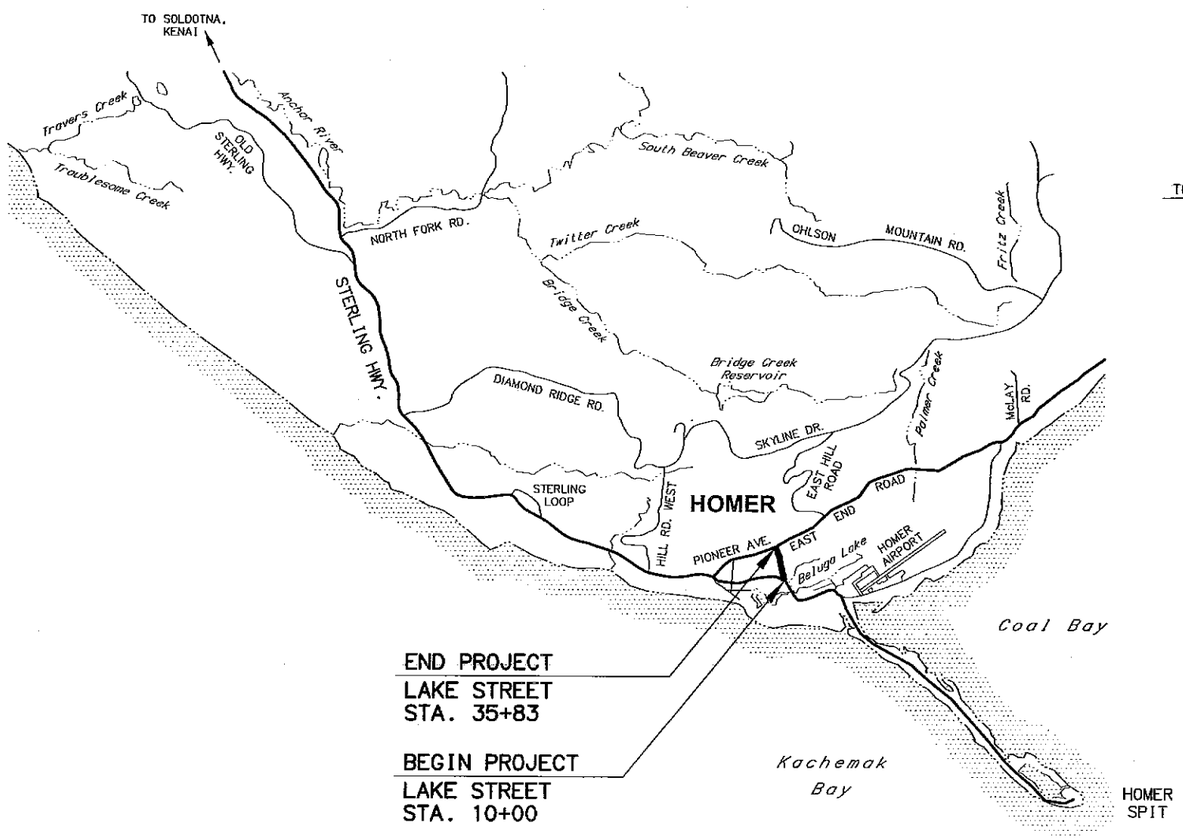

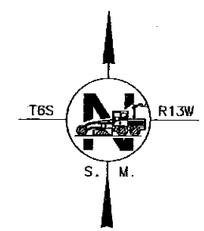

PIH REVIEW
AUGUST 2015

STATE OF ALASKA
DEPARTMENT OF TRANSPORTATION & PUBLIC FACILITIES

STATE OF ALASKA 49TH JAMES E. AMUNDSEN CE 10497 REGISTERED PROFESSIONAL ENGINEER

STATE OF ALASKA 49TH CARLA J. SMITH CE 11385 REGISTERED PROFESSIONAL ENGINEER

APPROVED:

REGIONAL PRE-CONSTRUCTION ENGINEER DATE

CONCUR:

DIRECTOR, DESIGN & CONSTRUCTION DATE

CERTIFIED TRUE & CORRECT AS-BUILT OF ACTUAL FIELD CONDITION:

CONSTRUCTION PROJECT MANAGER DATE

DRAWING LOCATION
W:\Projects\Homer Lake Street Rehab - 52461\Civ3D12\Planset\52461_A01_Title.dwg

DATE TIME 7/23/2015 11:18 AM

LAYOUT A1

SCALE 1"= 2 MILES #

XREFS NONE

DESIGNED BY LAH
CHECKED BY KBK
DRAFTED BY VJS

REVISIONS		
NO.	DATE	DESCRIPTION

STATE	PROJECT DESIGNATION	YEAR	SHEET NO.	TOTAL SHEETS
ALASKA	0001422/Z524610000	2017	A2	A4

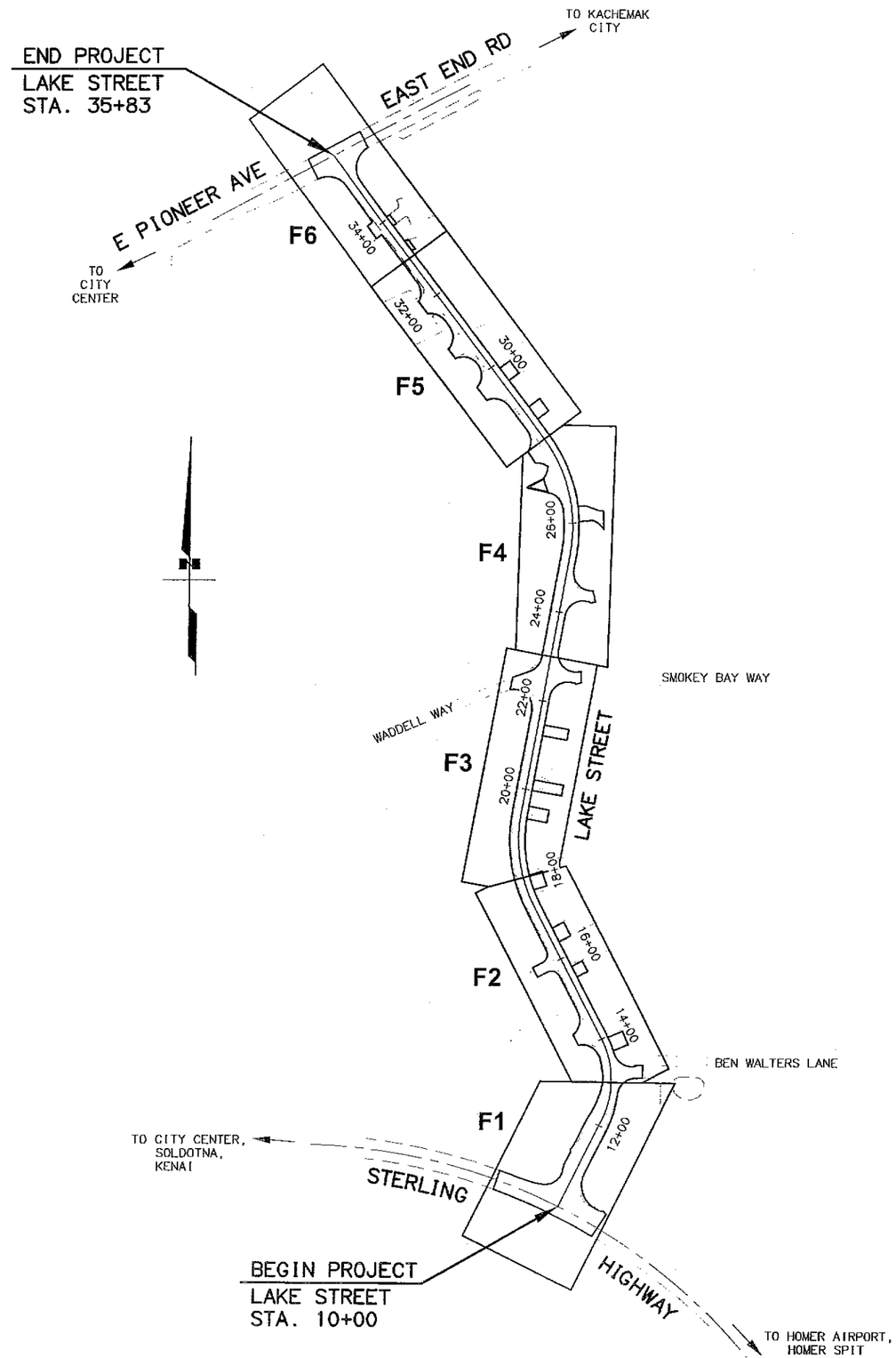

GENERAL NOTES:

1. ALL CONSTRUCTION WILL BE CONTAINED WITHIN THE RIGHT-OF-WAY, TEMPORARY CONSTRUCTION EASEMENTS, AND TEMPORARY CONSTRUCTION PERMITS. NO EXCESS MATERIAL SHALL BE DISPOSED OF WITHIN THE RIGHT-OF-WAY, UNLESS SPECIFICALLY CALLED FOR IN THE PLANS OR DIRECTED BY THE ENGINEER.

2. THE RIGHT-OF-WAY LINES SHOWN WERE DRAWN ON THE PLANS USING INFORMATION FROM DOT&PF, PLATTED SUBDIVISIONS, AND SURVEYED MONUMENTS ON THE GROUND. THE RIGHT-OF-WAY LINES WERE INSERTED USING A COMMON COORDINATE SYSTEM.

3. ALL PAVEMENT CUTS SHALL BE MADE WITH A SAW OR ALTERNATE METHOD APPROVED BY THE ENGINEER.

4. PLACE 4" OF TOPSOIL AND SEED ANY AREAS WITHIN THE RIGHT-OF-WAY DISTURBED BY CONSTRUCTION, AND AS DIRECTED BY THE ENGINEER.

5. ADJUST ALL PAVEMENT PENETRATIONS TO FINAL GRADE PRIOR TO TOP LIFT OF PAVING.

   IF ANY PAVEMENT PENETRATION REQUIRED GRADE ADJUSTMENT AFTER FINAL LIFT PAVING, AS DETERMINED BY THE ENGINEER, SAW CUT A NEAT LINE ALONG THE PAVEMENT TO BE REMOVED. USE AN INFRARED HEATER TO HEAT THE EXISTING PAVEMENT, EQUIPMENT AND MAXIMUM TEMPERATURE SHALL BE APPROVED BY THE ENGINEER. REPLACE THE REMOVED ASPHALT WITH NEW HOT MIX ASPHALT AND THOROUGHLY COMPACT. SEAL JOINTS AT LEAST 12 INCHES WIDE USING ASPHALT SYSTEMS GSB-88 OR APPROVED EQUAL, WHILE THE HOT MIX ASPHALT IS CLEAN, FREE OF MOISTURE AND PRIOR TO STRIPING.

   THERE SHALL BE NO PAYMENT FOR ADDITIONAL WORK CAUSED BY FAILURE TO ADJUST PAVEMENT PENETRATIONS TO FINAL GRADE.

6. THE EXISTING INFORMATION SHOWN IN THE PLANS IS FROM AS-BUILTS AND HAS BEEN PARTIALLY FIELD VERIFIED. FIELD CONDITIONS MAY NOT BE ACCURATELY REPRESENTED AND/OR MAY HAVE CHANGED. ADJUST INSTALLATIONS AS DIRECTED BY THE ENGINEER.

7. CONSTRUCT CURB RAMPS TO AVOID IMPACTING SIGNAL POLE FOUNDATIONS. DO NOT COVER SIGNAL POLE FOUNDATION BOLTS AND BASE PLATES WITH TOPSOIL.

8. ON STANDARD DRAWING C-03.10, PROVIDE A.D.A. COMPLIANT PEDESTRIAN TRAFFIC CONTROL DEVICES FOR PEDESTRIAN DETOURS.

9. CONSTRUCT RAMP RUNS, LANDING, FLARES, AND SIDEWALK EXTENSIONS SHOWN IN THE PLANS USING 4" CONCRETE REGARDLESS OF WHETHER THE EXISTING SIDEWALK/PATHWAY IS ASPHALT OR CONCRETE.

INDEX

SHEET NO.	DESCRIPTION
A1	TITLE SHEET
A2	SHEET LAYOUT, INDEX, & GENERAL NOTES
A3	LEGEND
A4	SURVEY CONTROL SHEET
B1 - B2	TYPICAL SECTIONS
C1	ESTIMATE OF QUANTITIES
D0 - D2	SUMMARY SHEETS
E1 - E6	DETAIL SHEETS
F1 - F6	PLAN AND PROFILE SHEETS
F7 - F8	APPROACH PROFILE SHEETS
H1 - H7	SIGNING AND STRIPING

THE FOLLOWING REGIONAL DRAWINGS APPLY TO THIS PROJECT:

CR-T-01.01

IN THE EVENT OF A CONFLICT, REGIONAL DRAWINGS SUPERSEDE STANDARD DRAWINGS.

THE FOLLOWING STANDARD DRAWINGS APPLY TO THIS PROJECT:

C-03.10, C-04.12, C-05.20
D-01.02, D-04.21, D-06.10, D-20.03, D-22.01, D-25.00, D-26.02
E-09.00
I-21.03, I-22.03, I-81.00
M-13.01, M-16.01
S-00.11, S-05.01, S-23.00, S30.03, S-31.01,
T-20.03, T-21.03, T-22.03, T-23.00

SPECIFICATION:

CONSTRUCT THE IMPROVEMENTS COVERED BY THESE PLANS IN ACCORDANCE WITH THE ALASKA DEPARTMENT OF TRANSPORTATION AND PUBLIC FACILITIES 2015 STANDARD SPECIFICATIONS FOR HIGHWAY CONSTRUCTION AND THE PROJECT SPECIAL PROVISIONS AS OF THE ADVERTISEMENT DATE OF THE PROJECT.

STATE OF ALASKA
KRISTEN E. KEIFER
CE 13132
REGISTERED PROFESSIONAL ENGINEER

STATE OF ALASKA
DEPARTMENT OF TRANSPORTATION
AND PUBLIC FACILITIES

HOMER LAKE STREET
REHABILITATION

REVIEW

SHEET LAYOUT, INDEX &
GENERAL NOTES

DRAWING LOCATION	DATE TIME	LAYOUT	SCALE	XREFS	DESIGNED BY	CHECKED BY	DRAFTED BY
W:\Projects\Homer Lake Street Rehab - 52461\Civ3D12\Planset\52461_A02_ Sheet Layout.dwg	7/28/2015 10:45 AM	A2	1" = 150'	BASE, DESIGN, BORDER	AJH	KEK	KJS

REVISIONS		
NO.	DATE	DESCRIPTION

STATE	PROJECT DESIGNATION	YEAR	SHEET NO.	TOTAL SHEETS
ALASKA	0001422/Z524610000	2017	A3	A4

UTILITIES

	EXISTING	PROPOSED
PIPELINES:		
STORM DRAIN STRUCTURE AND PIPE NUMBERS, APPLICABLE IF SHOWN		S1-1, S1-2, P1-1, P1-2
STORM DRAIN		SD
MANHOLE STORM DRAIN		SD
CURB INLET CATCH BASIN		
FIELD INLET CATCH BASIN		FI
PIPE CULVERT w/ END SECTION		
CLEANOUT		CO
SANITARY SEWER		SS
MANHOLE SANITARY SEWER		SS
SEPTIC VENTS		
WATER		W
FIRE HYDRANT		
WELL		
VALVE OR RISER		
NATURAL GAS		
OIL OR GASOLINE PIPELINE		
ELECTRIC (OVERHEAD) (DIRECT BURY) (OVERHEAD)		
UTILITY POLE		
UTILITY POLE WITH LUMINAIRE		
GUY POLE		
GUY WIRE ANCHOR		
TRANSMISSION TOWER [WOOD]		
TRANSMISSION TOWER [STEEL]		
ELECTRICAL PEDESTAL		
ELECTRICAL TRANSFORMER		
ELECTRIC METER		
ELECTRICAL OUTLET		
ELECTRIC MANHOLE		
TELEPHONE (OVERHEAD) (DIRECT BURY) (DIRECT BURY)		
TELEPHONE PEDESTAL		
TELEPHONE MANHOLE		
FIBER OPTIC		
FIBER OPTIC MANHOLE		
CABLE TV (OVERHEAD) (DIRECT BURY)		
CABLE T.V. PEDESTAL		
SATELLITE DISH		
U.G. DUCT (E, T, FO)		

UTILITIES

	EXISTING	PROPOSED
ELECTROLIER		
HIGHTOWER		
SIGNAL POLE WITH MAST		
PEDESTRIAN PUSH BUTTON		
RURAL BEACON		
SCHOOL ZONE BEACON		

RIGHT OF WAY

	EXISTING	PROPOSED
PRIMARY CENTERLINE MONUMENT		
SECONDARY CENTERLINE MONUMENT		
PROJECT RIGHT-OF-WAY LINES		ROW
CONTROLLED ACCESS LINE		C/A
TEMPORARY CONSTRUCTION EASEMENT/PERMIT		
PROJECT CENTERLINE	27+00	
RAILROAD CENTERLINE		

EXISTING TOPOGRAPHY

	EXISTING/PROPOSED
CONIFER TREE OR TREES	
DECIDUOUS TREE OR TREES	
SHRUB OR SHRUBS	
WETLANDS	
CREEK	
RIVER	
LAKE / POND	LAKE, POND
DRAINAGE FLOW	
CONTOURS - MAJOR	515
CONTOURS - MINOR	

MISCELLANEOUS

	EXISTING	PROPOSED
BUILDING		
TANKS ABOVE GROUND UNDERGROUND		
PRIVATE SIGN		
POST/BOLLARDS		
MAILBOX		MB
TRAFFIC SIGN		
TRAFFIC SIGN POST #		##
VENT		

ROADWAY

	EXISTING	PROPOSED
ROADWAY OBLITERATION		
LIMIT OF CUT SLOPE		
LIMIT OF FILL SLOPE		
EDGE OF PAVEMENT		
CONCRETE CURB		
CONCRETE CURB & GUTTER		
CONCRETE CURB CUT		
SIDEWALK		
CURB RAMPS		
PARALLEL CURB RAMP		
PERPENDICULAR CURB RAMP		
MID-BLOCK CURB RAMP		
UNIDIRECTIONAL CURB RAMP		
DETECTABLE WARNING TILES		
DRIVEWAY APPROACH		
GRAVEL EDGE		
PATH / TRAIL		
BRIDGE		
TUNNEL		
NOISE BARRIER		X X
FENCE		X X
RETAINING WALL		
HEAD & WINGWALLS		
GUARDRAIL		
END SECTION		
PARALLEL GUARDRAIL SECTION		
SPECIAL DITCH		
BOTTOM OF DITCH		
RIPRAP		
BOULDER OR BOULDERS		

STATE OF ALASKA 49TH KRISTEN E. KEIFER CE 13132 REGISTERED PROFESSIONAL ENGINEER

STATE OF ALASKA
DEPARTMENT OF TRANSPORTATION
AND PUBLIC FACILITIES

HOMER LAKE STREET REHABILITATION

REVIEW

LEGEND SHEET

DESIGNED BY | CHECKED BY | DRAFTED BY

XREFS N/A N/A

SCALE N/A

LAYOUT A3

DATE TIME 7/14/2015 3:34 PM

DRAWING LOCATION W:\Projects\Homer Lake Street Rehab - 52461\Civ3D12\Planset\52461_A03_Legend.dwg

REVISIONS		
NO.	DATE	DESCRIPTION

STATE	PROJECT DESIGNATION	YEAR	SHEET NO.	TOTAL SHEETS
ALASKA	0001422/Z524610000	2017	A4	A4

Intentionally left blank for PIH Review

STATE OF ALASKA
49TH
KRISTEN E. KEIFER
CE 13132
REGISTERED PROFESSIONAL ENGINEER

STATE OF ALASKA
DEPARTMENT OF TRANSPORTATION
AND PUBLIC FACILITIES

HOMER LAKE STREET
REHABILITATION

REVIEW

SURVEY CONTROL

DRAWING LOCATION	DATE TIME	LAYOUT	SCALE	XREFS	DESIGNED BY --
W:\Projects\Homer Lake Street Rehab - 52461\Civ3D12\Planset\52461_A04_Survey Control.dwg	7/14/2015 3:34 PM	A4	N/A	N/A	CHECKED BY --
				N/A	DRAFTED BY --

REVISIONS		
NO.	DATE	DESCRIPTION

STATE	PROJECT DESIGNATION	YEAR	SHEET NO.	TOTAL SHEETS
ALASKA	0001422/Z524610000	2017	B1	B2

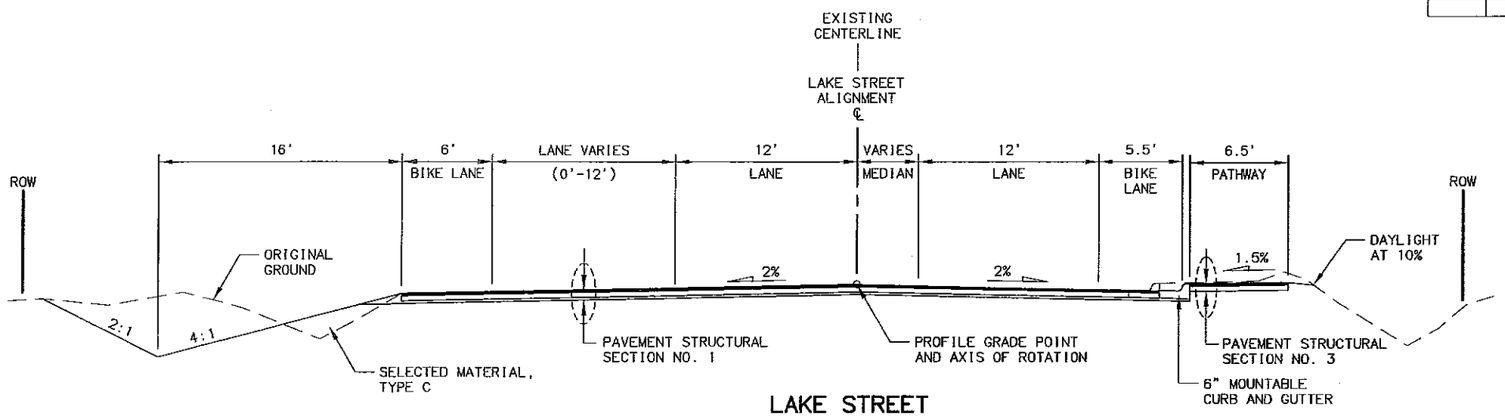

LAKE STREET

STA. 10+00 TO STA. 12+76

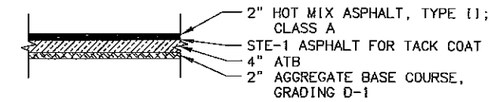

PAVEMENT STRUCTURAL SECTION NO. 1

N.T.S.

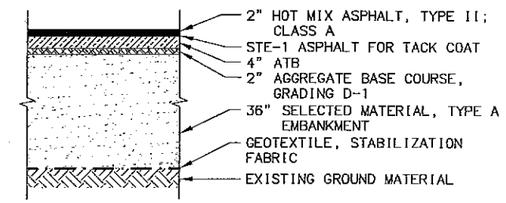

PAVEMENT STRUCTURAL SECTION NO. 2

N.T.S.

NOTES:

1. WHERE CURB IS PRESENT, TYPICAL SECTION DIMENSIONS ARE MEASURED TO FACE OF CURB. REFER TO CURB AND GUTTER DETAILS.
2. WHERE CURB IS NOT ADJACENT TO THE PAVEMENT EDGE, SHOULDER THE PAVEMENT EDGE WITH AGGREGATE BASE COURSE, GRADING D-1 AS DIRECTED BY THE ENGINEER AND WITHIN 48 HOURS OF PAVING.
3. APPLY STE-1 TACK COAT TO CURB EDGES, SAW CUT EDGES, AND BETWEEN LIFTS OF PAVEMENT AND ATB.
4. WHEN NEW EMBANKMENT IS TO BE COMPACTED AGAINST EXISTING EMBANKMENT, BENCH SLOPES ACCORDING TO THE SPECIFICATIONS. EXTEND AGGREGATE BASE COURSE LAYER TO EXISTING FOG LINE.

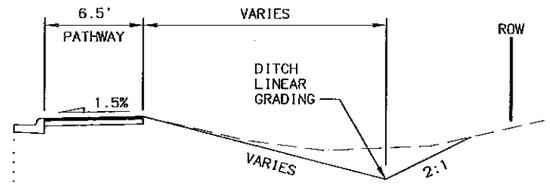

STA. 13+30 TO STA. 13+65
STA. 14+00 TO STA. 15+45
STA. 15+80 TO STA. 16+30
STA. 18+95 TO STA. 19+20
STA. 19+70 TO STA. 19+95
STA. 20+35 TO STA. 21+20
STA. 23+10 TO STA. 24+20
STA. 28+80 TO STA. 29+50

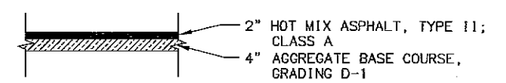

PAVEMENT STRUCTURAL SECTION NO. 3

N.T.S.

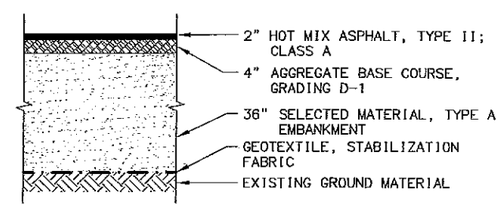

PAVEMENT STRUCTURAL SECTION NO. 4

N.T.S.

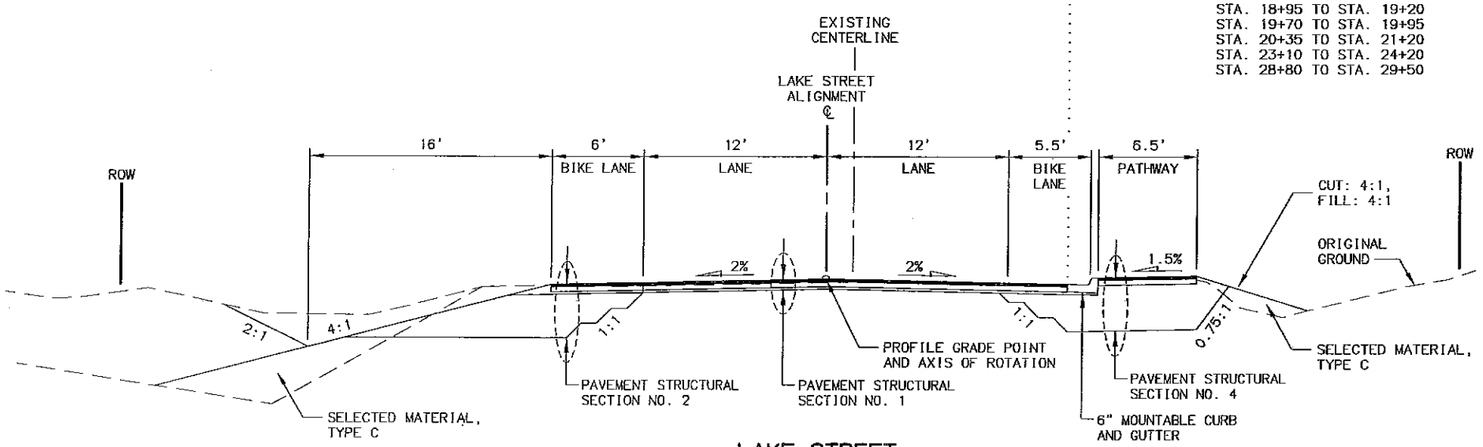

LAKE STREET

STA. 12+76 TO STA. 32+11

STATE OF ALASKA 49TH KRISTEN E. KEIFER CE 13132 REGISTERED PROFESSIONAL ENGINEER

STATE OF ALASKA
DEPARTMENT OF TRANSPORTATION AND PUBLIC FACILITIES

HOMER LAKE STREET REHABILITATION

REVISED

TYPICAL SECTIONS

DRAWING LOCATION: W:\Projects\Homer Lake Street Rehab - 52461\Civ3D12\Planset\52461_B01_Typicals.dwg
DATE TIME: 7/28/2015 10:47 AM
LAYOUT: B1
SCALE: N/A
XREFS: N/A N/A
DESIGNED BY: ALH/SJR
CHECKED BY: KEK
DRAFTED BY: ALH/VJS

REVISIONS		
NO.	DATE	DESCRIPTION

STATE	PROJECT DESIGNATION	YEAR	SHEET NO.	TOTAL SHEETS
ALASKA	0001422/Z524610000	2017	B2	B2

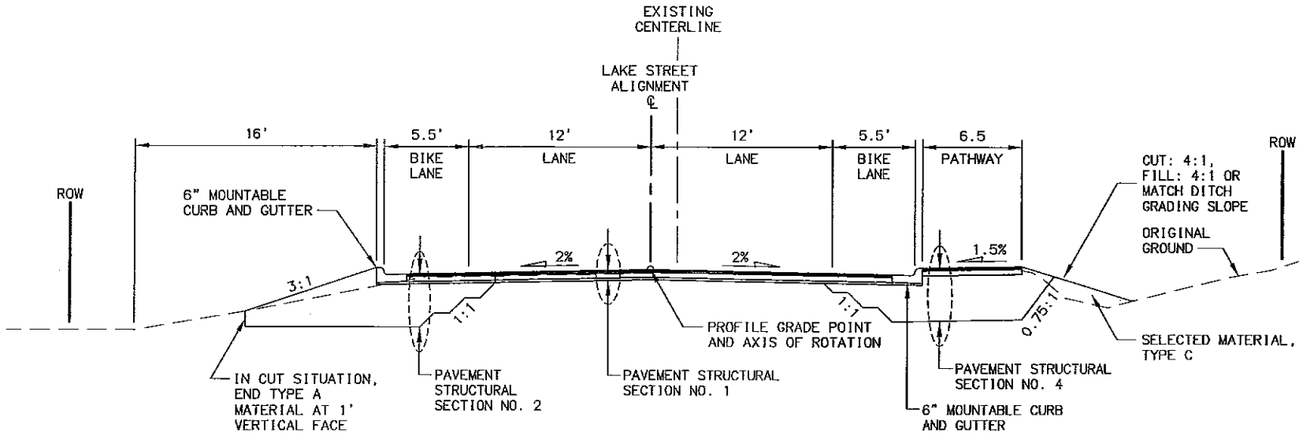

LAKE STREET

STA. 32+11 TO STA. 34+12

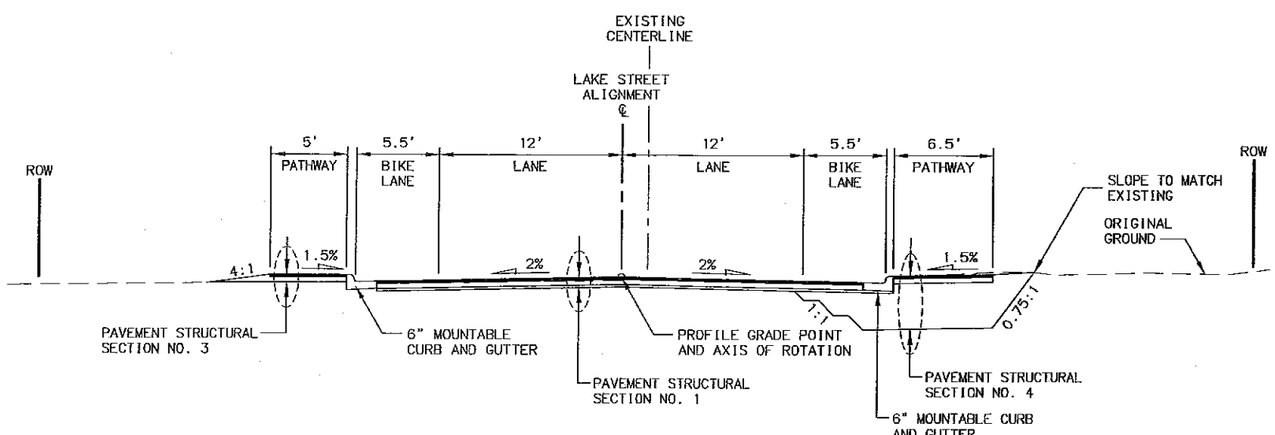

LAKE STREET

STA. 34+12 TO STA. 35+82.93

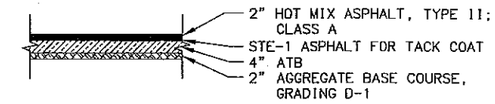

PAVEMENT STRUCTURAL SECTION NO. 1

N.T.S.

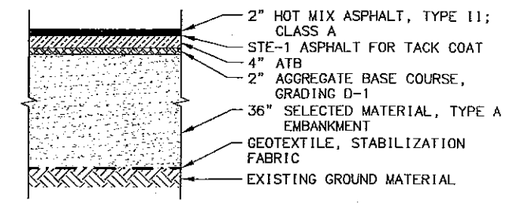

PAVEMENT STRUCTURAL SECTION NO. 2

N.T.S.

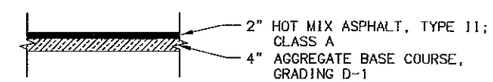

PAVEMENT STRUCTURAL SECTION NO. 3

N.T.S.

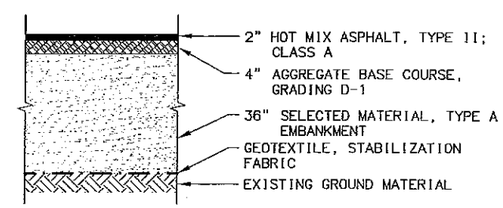

PAVEMENT STRUCTURAL SECTION NO. 4

N.T.S.

STATE OF ALASKA 49TH KRISTEN E. KEIFER CE 13132 REGISTERED PROFESSIONAL ENGINEER

STATE OF ALASKA
DEPARTMENT OF TRANSPORTATION AND PUBLIC FACILITIES

HOMER LAKE STREET REHABILITATION

REVIEW

TYPICAL SECTIONS

DRAWING LOCATION W:\Projects\Homer Lake Street Rehab - 52461\C1v3D12\Planset\52461_B01_Typicals.dwg

DATE TIME 7/20/2015 1:41 PM | LAYOUT B2 | SCALE N/A | XREFS N/A N/A | DESIGNED BY ALH/SJR | CHECKED BY KEK | DRAFTED BY ALH/JJS

REVISIONS		
NO.	DATE	DESCRIPTION

STATE	PROJECT DESIGNATION	YEAR	SHEET NO.	TOTAL SHEETS
ALASKA	0001422/Z524610000	2017	C1	C1

ESTIMATE OF QUANTITIES

ITEM NO.	ITEM	UNIT	TOTAL QUANTITY
201(3B)	CLEARING AND GRUBBING	L.S.	ALL REQ'D
202(2)	REMOVAL OF PAVEMENT	S.Y.	14,600
202(3)	REMOVAL OF SIDEWALK	S.Y.	2,180
202(4)	REMOVAL OF CULVERT PIPE	L.F.	1,277
202(8)	REMOVAL OF INLET	EACH	7
202(9)	REMOVAL OF CURB AND GUTTER	L.F.	3,351
203(3)	UNCLASSIFIED EXCAVATION	C.Y.	13,000
203(6A)	BORROW, TYPE A	TON	15,000
203(27)	DITCH LINEAR GRADING	STATION	5.45
301(1)	AGGREGATE BASE COURSE, GRADING D-1	TON	2,300
306(1)	ATB	TON	3,100
306(2)	ASPHALT BINDER, GRADE PG 58-34	TON	190
306(10)	ASPHALT MATERIAL PRICE ADJUSTMENT	C.S.	ALL REQ'D
401(1A)	HMA, TYPE II; CLASS A	TON	2,000
401(4)	ASPHALT BINDER, GRADE PG 58-34	TON	120
401(8A)	HMA PRICE ADJUSTMENT, TYPE II; CLASS A	C.S.	ALL REQ'D
401(14)	JOINT ADHESIVE	L.F.	2,600
402(1)	STE-1 ASPHALT FOR TACK COAT	TON	90
603(17-18)	18 INCH PIPE	L.F.	100
603(17-24)	24 INCH PIPE	L.F.	811
603(17-36)	36 INCH PIPE	L.F.	290
603(17-48)	48 INCH PIPE	L.F.	275
603(20-18)	END SECTION FOR 18 INCH PIPE	EACH	6
603(20-24)	END SECTION FOR 24 INCH PIPE	EACH	26
603(20-36)	END SECTION FOR 36 INCH PIPE	EACH	8
603(20-48)	END SECTION FOR 48 INCH PIPE	EACH	6
604(4)	ADJUST EXISTING MANHOLE	EACH	1
604(5)	INLET TYPE A	EACH	6
608(2)	ASPHALT SIDEWALK	TON	201
608(6)	CURB RAMP	EACH	20
609(2)	CURB AND GUTTER, TYPE 1	L.F.	3,261
611(2)	RIPRAP, CLASS I	TON	160
615(1)	STANDARD SIGN	S.F.	83
616(4)	THAW WIRE INSTALLATION	EACH	2
618(2)	SEEDING	LB	75
618(3)	WATER FOR SEEDING	M-GAL	75
619((5)	SEDIMENT RETENTION FIBER ROLL (SRFRs)	L.F.	1000
620(1)	TOPSOIL	S.Y.	5,950
627(6)	FIRE HYDRANT RELOCATION	EACH	4
627(10)	ADJUSTMENT OF VALVE BOX	EACH	12
630(2)	GEOTEXTILE, STABILIZATION, CLASS I	S.Y.	5,800
633(1)	SILT FENCE	L.F.	4,710
639(6)	APPROACH	EACH	22
640(1)	MOBILIZATION AND DEMOBILIZATION	L.S.	ALL REQ'D
640(4)	WORKER MEALS AND LODGING, OR PER DIEM	L.S.	ALL REQ'D
641(1)	EROSION, SEDIMENT, AND POLLUTION CONTROL ADMINISTRATION	L.S.	ALL REQ'D
641(2)	TEMPORARY EROSION, SEDIMENT, AND POLLUTION CONTROL	C.S.	ALL REQ'D
641(6)	WITHHOLDING	C.S.	ALL REQ'D
641(7)	SWPPP MANAGER	L.S.	ALL REQ'D

ESTIMATE OF QUANTITIES, CONT'D.

ITEM NO.	ITEM	UNIT	TOTAL QUANTITY
642(1)	CONSTRUCTION SURVEYING	L.S.	ALL REQ'D
642(3)	THREE PERSON SURVEY PARTY	HOUR	100
643(2)	TRAFFIC MAINTENANCE	L.S.	ALL REQ'D
643(3)	PERMANENT CONSTRUCTION SIGNS	L.S.	ALL REQ'D
643(15A)	FLAGGING	C.S.	ALL REQ'D
643(23)	TRAFFIC PRICE ADJUSTMENT	C.S.	ALL REQ'D
643(25)	TRAFFIC CONTROL	C.S.	ALL REQ'D
644(1)	FIELD OFFICE	L.S.	ALL REQ'D
644(2)	FIELD LABORATORY	L.S.	ALL REQ'D
644(10)	ENGINEERING COMMUNICATIONS	C.S.	ALL REQ'D
644(15)	NUCLEAR TESTING EQUIPMENT STORAGE SHED	EACH	1
644(16)	STORAGE CONTAINER	EACH	1
645(1)	TRAINING PROGRAM, 1 TRAINEE/APPRENTICE	LABOR HOUR	500
646(1)	CPM SCHEDULING	L.S.	ALL REQ'D
647(5)	BACKHOE, 4WD, 1 CY BUCKET, 75-HP MIN, 15 FT DEPTH	C.S.	ALL REQ'D
654(1)	EAGLE MONITORING	C.S.	ALL REQ'D
660(11)	TRAFFIC LOOP	EACH	9
660(17A)	TRAFFIC SIGNAL SYSTEM MODIFICATION AT STERLING HIGHWAY	L.S.	ALL REQ'D
661(5)	MODIFY EXISTING LOAD CENTER	EACH	1
670(10C)	MMA PAVEMENT MARKINGS, TRANSVERSE AND GORE SURFACE APPLIED	L.F.	100
670(10D)	MMA PAVEMENT MARKINGS, LONGITUDINAL INLAID	L.F.	17,300
670(10E)	MMA PAVEMENT MARKINGS, SYMBOLS AND ARROWS INLAID	EACH	9
682(1)	VAC-TRUCK POTHOLE	C.S.	ALL REQ'D

TABLE OF ESTIMATING FACTORS

ITEM NO.	ITEM DESCRIPTION	ESTIMATING FACTOR
203(6A)	BORROW, TYPE A	144 LB/C.F.
301(1)	AGGREGATE BASE COURSE, GRADING D-1	144 LB/C.F.
306(1)	ATB	151 LB/C.F.
306(2)	ASPHALT CEMENT, GRADE 58-34	5.3% OF TOTAL WEIGHT OF 306(1)
401(1)	HOT MIX ASPHALT, TYPE II; CLASS A	151 LB/C.F.
401(2)	ASPHALT CEMENT, GRADE PG 58-34	5.3% OF TOTAL WEIGHT OF 401(1)
402(1)	STE-1 ASPHALT FOR TACK COAT	0.000334 TON/S.Y.
608(7)	ASPHALT PATHWAY	151 LB/C.F.
618(2)	SEEDING	0.0010 LB/S.F.
618(3)	WATER FOR SEEDING	1 GAL/1 S.F.

STATE OF ALASKA
49TH
KRISTEN E. SEIFER
CE 13132
REGISTERED PROFESSIONAL ENGINEER

STATE OF ALASKA
DEPARTMENT OF TRANSPORTATION
AND PUBLIC FACILITIES

HOMER LAKE STREET
REHABILITATION

REVISED

ESTIMATE OF QUANTITIES

DESIGNED BY ALM
CHECKED BY KSK
DRAFTED BY ALM/VJS

XREFS
N/A
N/A

SCALE

LAYOUT
C1

DATE TIME
7/23/2015 2:47 PM

DRAWING LOCATION
W:\Projects\Homer Lake Street Rehab - 52461\C1\v3D12\Planset\52461_C01_Estimate.dwg

REVISIONS		
NO.	DATE	DESCRIPTION

STATE	PROJECT DESIGNATION	YEAR	SHEET NO.	TOTAL SHEETS
ALASKA	0001422/Z524610000	2017	D0	D2

EARTHWORK SUMMARY

SHEET	STATION FROM	STATION TO	ESTIMATED EXCAVATION: TOTAL UNCLASSIFIED EXCAVATION (CY)	ESTIMATED EXCAVATION: TOTAL USEABLE EXCAVATION AS SELECTED MATERIAL, TYPE A (CY)	ESTIMATED EMBANKMENT: SELECTED MATERIAL, TYPE A (CY)	REMARKS
F1	10+00	13+00	888	0	4	
F2	13+00	18+00	2,446	0	1,438	
F3	18+00	23+00	2,464	0	1,632	
F4	23+00	28+00	2,590	0	1,630	
F5	28+00	33+00	3,180	0	1,662	
F6	33+00	35+82.90	953	0	604	
TOTAL			12,521		6,972	
ITEM NUMBER			203(3)		203(6A)	
TOTAL PAY ITEM QUANTITY (CY) (ROUNDED)			13,000		7,700	203(6A) ROUNDED TOTAL = 15,000 TONS

NOTE: ROUNDED TOTAL INCLUDES A 10% CONTINGENCY.

FOR REVIEW ONLY.

STATE OF ALASKA
49TH
KRISTEN E. KEIFER
REGISTERED PROFESSIONAL ENGINEER

STATE OF ALASKA
DEPARTMENT OF TRANSPORTATION
AND PUBLIC FACILITIES

HOMER LAKE STREET
REHABILITATION

REVISED

SUMMARY TABLES

DESIGNED BY ALM
CHECKED BY KEK
DRAFTED BY TVS

XREFS
Border-Detail.dwg

SCALE
N/A

LAYOUT
D0

DATE TIME
7/23/2015 10:34 AM

DRAWING LOCATION
W:\Projects\Homer Lake Street Rehab - 52461\Civ3D12\Planset\52461_D01_Summaries.dwg

REVISIONS		
NO.	DATE	DESCRIPTION

STATE	PROJECT DESIGNATION	YEAR	SHEET NO.	TOTAL SHEETS
ALASKA	0001422/Z524610000	2017	D1	D2

202(4)

REMOVAL OF CULVERT PIPE

SHEET	STATION	OFFSET	202(4) REMOVAL OF CULVERT PIPE (LF)	NOTES
F2	13+32	RT	49.9	
F2	14+02	RT	49.3	
F2	14+22		59.7	CROSSES LAKE STREET
F2	14+48	LT	50.3	
F2	15+81	RT	37.2	
F2	16+13	LT	29.9	
F3	19+10	RT	15.9	
F3	19+71	RT	49.6	
F3	20+38	RT	44.2	
F3	22+97	LT	58.3	
F3	22+98	LT	103.9	
F4	23+11	RT	191.7	
F4	24+18	RT	49.7	
F4	26+44	RT	75.9	
F5	28+44		87.9	CROSSES LAKE STREET
F5	28+81	RT	47.1	
F5	29+09	RT	12.9	
F5	29+89	RT	39.4	
F5	30+08	LT	95.9	
F5	31+38	RT	9.0	BETWEEN FIELD INLET AND CURB INLET
F5	31+38	RT	36.0	
F5	32+32	LT	72.0	
F5	32+34	LT	10.4	
		TOTAL	1276.10	
		TOTAL ROUNDED	1,277.0	

STATE OF ALASKA
49TH
KRISTEN E. KEIFER
CE 13132
REGISTERED PROFESSIONAL ENGINEER

STATE OF ALASKA
DEPARTMENT OF TRANSPORTATION
AND PUBLIC FACILITIES

HOMER LAKE STREET
REHABILITATION

REVIEW

SUMMARY TABLES

DESIGNED BY KEK
CHECKED BY KEK
DRAFTED BY VJS

XREFS
N/A
N/A

SCALE
N/A

LAYOUT
D1

DATE TIME
7/23/2015 2:54 PM

DRAWING LOCATION
W:\Projects\Homer Lake Street Rehab - 52461\Civ3D12\Plonset\52461_D01_Summaries.dwg

REVISIONS		
NO.	DATE	DESCRIPTION

STATE	PROJECT DESIGNATION	YEAR	SHEET NO.	TOTAL SHEETS
ALASKA	0001422/Z524610000	2017	D2	D2

603(17-18,24,36,48), 603(20-18,24,36,48)

CULVERTS AND END SECTIONS

SHEET	PIPE ID	INLET			OUTLET			603(17-18) 18 IN PIPE (L.F.)	603(20-18) END SECTION FOR 18 IN PIPE (EACH)	603(17-24) 24 IN PIPE (L.F.)	603(20-24) END SECTION FOR 24 IN PIPE (EACH)	603(17-36) 36 IN PIPE (L.F.)	603(20-36) END SECTION FOR 36 IN PIPE (EACH)	603(17-48) 48 IN PIPE (L.F.)	603(20-48) END SECTION FOR 48 IN PIPE (EACH)	REMARKS
		STATION	OFFSET	INVERT ELEVATION	STATION	OFFSET	OUTLET ELEVATION									
F1	P1-1	10+90.2	21.2 RT	33.40	10+85.1	37.3 RT	31.39	17.0	1							
F2	P2-1	13+32.3	59.5 RT	37.14	12+93.8	52.9 RT	36.39			49.9	2					
F2	P2-2	14+02.1	40.4 RT	39.41	13+61.0	44.8 RT	39.09			49.3	2					
F2	P2-3	13+94.9	34.3 LT	41.39	14+50.5	35.3 LT	39.76			55.0	2					
F2	P2-4	14+22.4	15.6 RT	42.50	14+11.8	32.6 RT	42.08	20.1	1							
F2	P2-5	15+81.2	34.1 RT	46.82	15+44.1	33.0 RT	45.48			37.2	2					
F2	P2-6	16+19.0	34.6 LT	47.75	15+78.9	35.2 LT	46.03			40.0	2					
F2	P2-7	16+30.5	35.2 RT	50.87	16+72.3	36.2 RT	49.56			41.8	2					
F3	P3-1	18+38.0	33.7 LT	50.87	18+32.4	43.9 LT	50.4							12.0	1	
F3	P3-2	19+10.2	16.3 RT	60.40	19+08.7	39.7 RT	57.0	23.5	1							
F3	P3-3	19+17.2	48.0 RT	57.76	19+71.2	48.5 RT	55.54					49.6	2			
F3	P3-4	19+95.2	48.9 RT	60.9	20+39.4	48.9 RT	58.95					44.2	2			
F3	P3-5	23+11.4	59.1 RT	72.53	21+11.4	59.9 RT	64.23							200	2	
F3	P3-6	21+98.4	35.3 LT	75.46	22+70.4	35.3 LT	72.07			72.0	2					
F4	P4-1	24+75.2	53.6 RT	80.65	24+18.2	55.1 RT	78.27							57.0	2	
F4	P4-2	26+43.8	61.6 RT	89.77	25+79.6	60.3 RT	87.59					76.1	2			
F4	P4-3	27+33.6	35.9 LT	97.35	26+66.3	34.6 LT	94.05			60	2					
F4	P4-4	28+12.3	36.0 LT	102.24	27+48.3	36.1 LT	98.03			58.1	2					
F5	P5-1	28+36.1	37.9 RT	107.64	28+83.2	37.6 RT	106.12			47.1	2					
F5	P5-2	29+09.3	18.4 RT	111.40	29+09.5	31.2 RT	111.0	12.9	1							
F5	P5-3	29+95.3	35.3 LT	114.82	29+31.5	35.3 LT	110.47			63.9	2					
F5	P5-4	29+49.2	34.4 RT	115.30	29+88.6	34.1 RT	113.28			39.4	2					
F5	P5-5	30+11.6	16.7 RT	117.40	29+97.6	36.3 RT	117.00	24.1	1							
F5	P5-6	31+02.6	35.3 LT	122.15	30+47.7	35.3 LT	118.40			55.0	2					
F5	P5-7	32+25.8	31.3 LT	130.79	31+65.9	34.7 LT	126.39			59.9	2					
F5	P5-8	32+51.7	15.6 LT	131.90	32+51.7	27.5 LT	131.02	11.9	1							

STATE OF ALASKA
49TH
KRISTEN E. KEIFER
CE 13132
REGISTERED PROFESSIONAL ENGINEER

STATE OF ALASKA
DEPARTMENT OF TRANSPORTATION
AND PUBLIC FACILITIES

HOMER LAKE STREET
REHABILITATION

REVISED

SUMMARY TABLES

DESIGNED BY KEK
CHECKED BY
DRAFTED BY VJS

XREFS
N/A
N/A

SCALE
N/A

LAYOUT
D2

DATE TIME
7/23/2018 3:06 PM

DRAWING LOCATION
W:\Projects\Homer Lake Street Rehab - 52461\Civ3D12\Planset\52461_D01_Summaries.dwg

REVISIONS		
NO.	DATE	DESCRIPTION

STATE	PROJECT DESIGNATION	YEAR	SHEET NO.	TOTAL SHEETS
ALASKA	0001422/Z524610000	2017	E1	E6

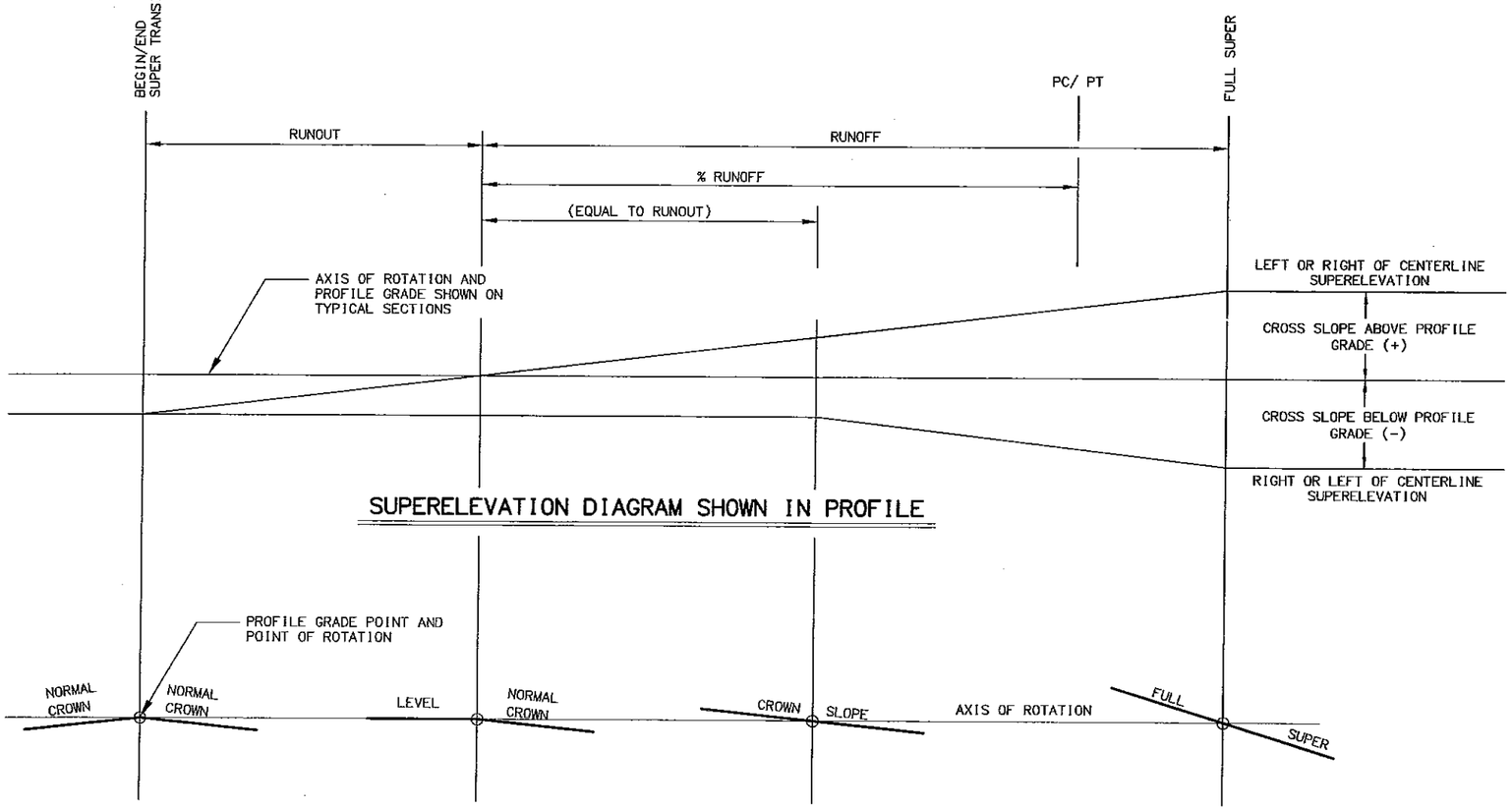

SUPERELEVATION DIAGRAM SHOWN IN PROFILE

SUPERELEVATION TRANSITION

SUPERELEVATION NOTES:

1. REFER TO PLAN AND PROFILE SHEETS FOR SUPERELEVATION VALUES AND SPECIAL CASES.
2. BUILD SUPERELEVATION INTO SUBGRADE AND CARRY THROUGH SHOULDERS.
3. % RUNOFF = PORTION OF RUNOFF ON TANGENT.
4. WIDENING FOR GUARDRAIL OR CURVATURE DOES NOT CHANGE THE LOCATION OF THE AXIS OF ROTATION.

STATE OF ALASKA
49TH
KRISTEN E. KEIFER
CE 13132
REGISTERED PROFESSIONAL ENGINEER

STATE OF ALASKA
DEPARTMENT OF TRANSPORTATION
AND PUBLIC FACILITIES

HOMER LAKE STREET
REHABILITATION

SUPERELEVATION
TRANSITION

REVIEW

DRAWING LOCATION
W:\Projects\Homer Lake Street Rehab - 52461\Civ3D12\Planset\52461_E01_Details.dwg

DATE TIME
7/14/2015 3:32 PM

LAYOUT
E1

SCALE
N/A

XREF'S
N/A
N/A

DESIGNED BY CHL/ALH
CHECKED BY KEK
DRAFTED BY CJ

REVISIONS		
NO.	DATE	DESCRIPTION

STATE	PROJECT DESIGNATION	YEAR	SHEET NO.	TOTAL SHEETS
ALASKA	0001422/Z524610000	2017	E2	E6

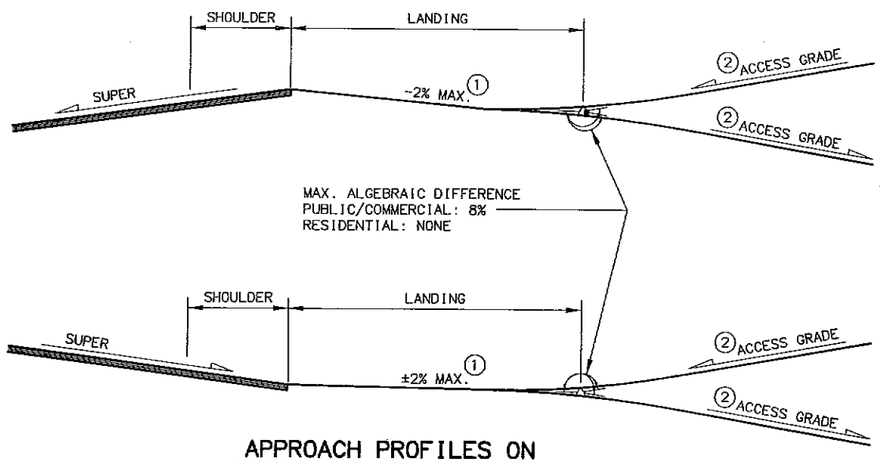

APPROACH PROFILES ON SUPER ELEVATED ROADWAY

① WHEN PATHWAY IS PRESENT, MAXIMUM LANDING GRADE IS TO BE ± 1.5%.

② ACCESS GRADE MAX. 15%

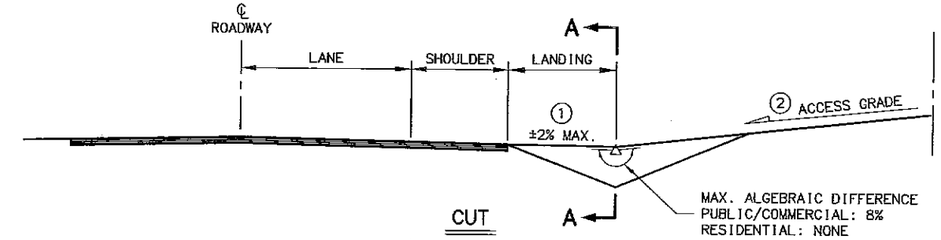

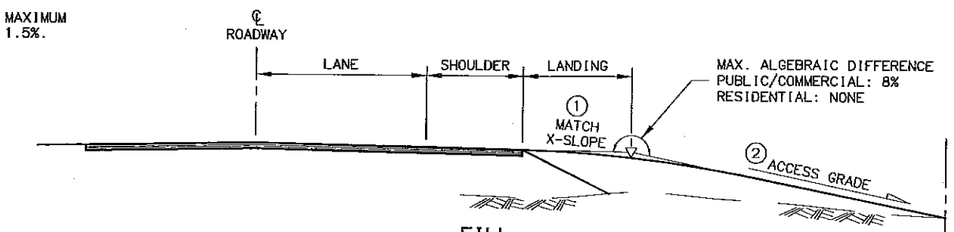

FILL

APPROACH PROFILES

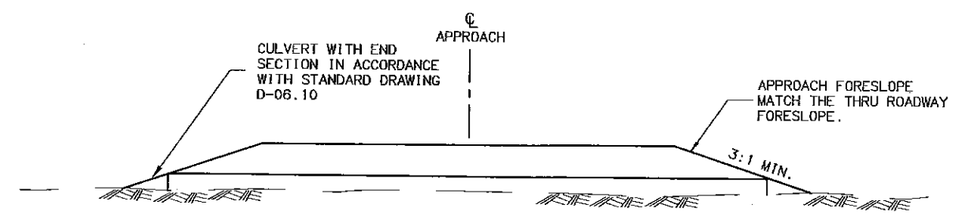

SECTION A-A

APPROACH TYPICAL

APPROACH RADIUS TABLE	
TYPE	RADIUS
RESIDENTIAL	20'
PUBLIC/COMMERCIAL	40'

LANDING TABLE	
TYPE	LENGTH
RESIDENTIAL	10'
PUBLIC/COMMERCIAL	30'

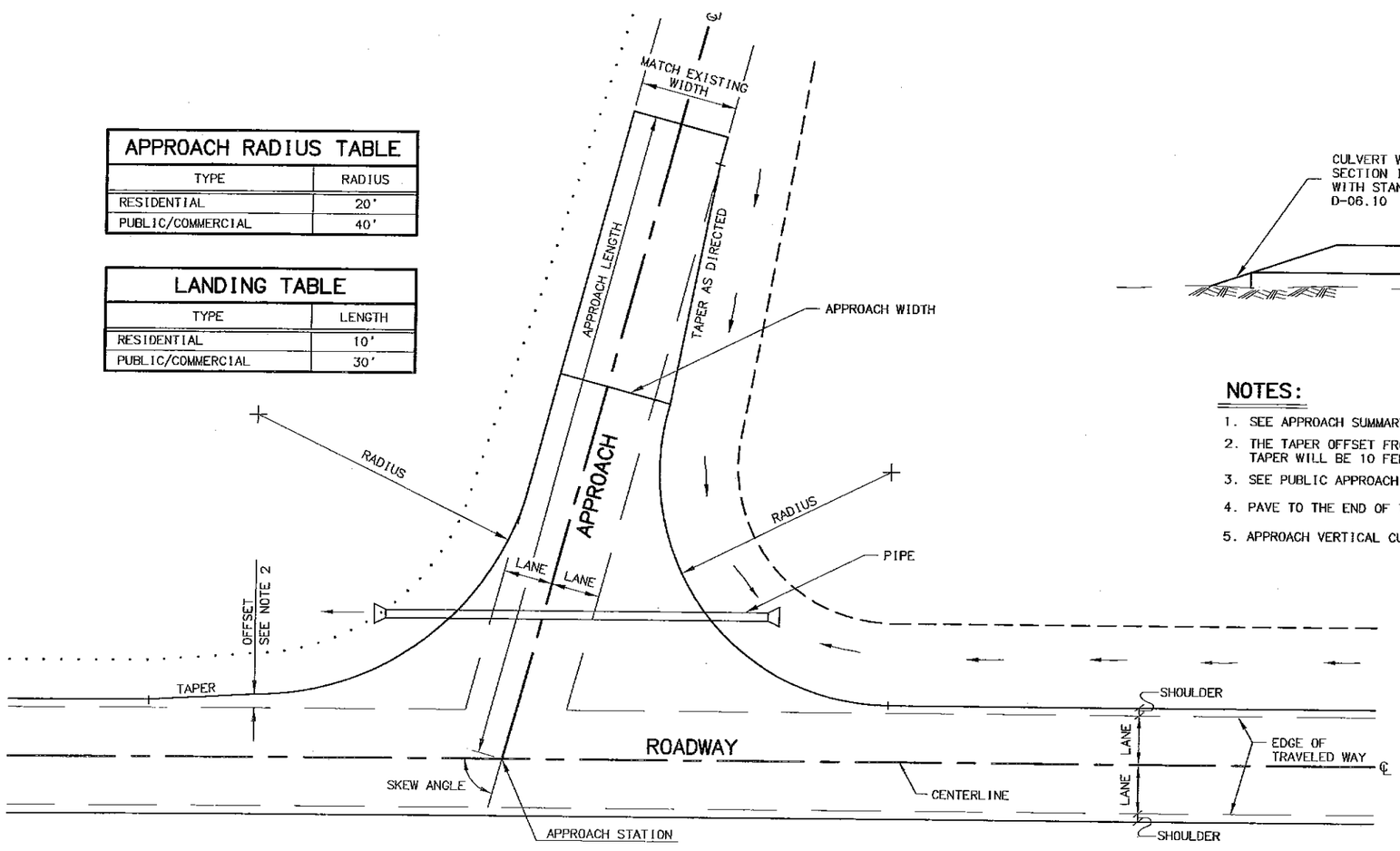

APPROACH PLAN

NOTES:

1. SEE APPROACH SUMMARY FOR APPROACH STATION, LENGTH, WIDTH, SKEW ANGLE, AND TYPE.
2. THE TAPER OFFSET FROM TRAVELED WAY = ASSIGNED VALUE OR SHOULDER WIDTH WHICHEVER IS LARGER. TAPER WILL BE 10 FEET IN LENGTH FOR EACH FOOT OF OFFSET.
3. SEE PUBLIC APPROACH AND DRIVEWAY TYPICAL SECTIONS.
4. PAVE TO THE END OF THE RADIUS RETURN UNLESS OTHERWISE INDICATED.
5. APPROACH VERTICAL CURVE REQUIREMENTS: CREST - 2 1/2 INCH MAXIMUM IN A 10-FOOT CHORD
   SAG - 2 INCH MAXIMUM IN A 10-FOOT CHORD

STATE OF ALASKA 49TH KRISTEN E. KEIFER CE 13132 REGISTERED PROFESSIONAL ENGINEER

REVIEWED

STATE OF ALASKA
DEPARTMENT OF TRANSPORTATION
AND PUBLIC FACILITIES

HOMER LAKE STREET REHABILITATION

UNCURBED APPROACH DETAILS

DRAWING LOCATION
W:\Projects\Homer Lake Street Rehab - 52461\Civ3D12\Planset\52461_E01_Details.dwg

DATE TIME 7/14/2015 3:32 PM | LAYOUT E2 | SCALE N/A | XREFS Border-Detail.dwg | DESIGNED BY ALH | CHECKED BY KEK | DRAFTED BY CJ

REVISIONS		
NO.	DATE	DESCRIPTION

STATE	PROJECT DESIGNATION	YEAR	SHEET NO.	TOTAL SHEETS
ALASKA	0001422/Z524610000	2017	E3	E6

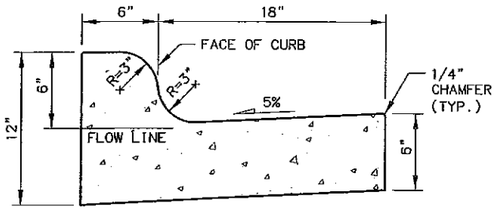

6" MOUNTABLE CURB & GUTTER

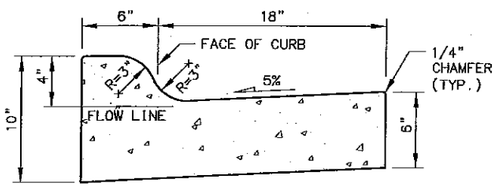

4" MOUNTABLE CURB & GUTTER

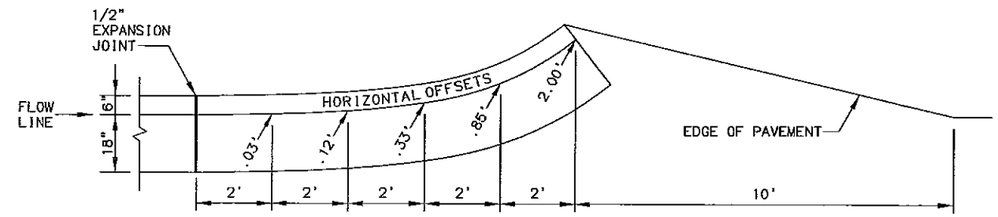

PLAN

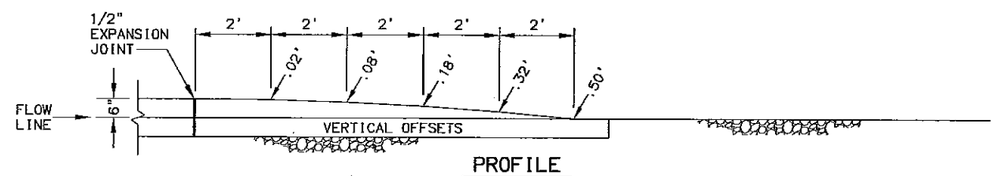

PROFILE

CURB & GUTTER TERMINATION TRANSITIONS

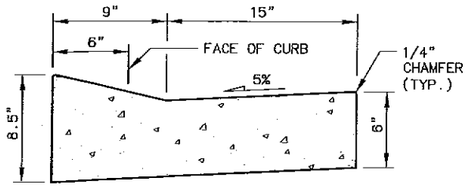

DEPRESSED CURB & GUTTER (CURB CUT)

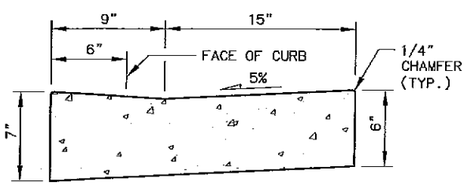

CURB RAMP CURB & GUTTER

CURBS

CURB NOTE:

MOUNTABLE, DEPRESSED, ROLLED, AND EXPRESSWAY GUTTER PANS SHALL MATCH THE ROADWAY CROSS SLOPE IN THE HIGH SIDE OF SUPER ELEVATED AREAS.

STATE OF ALASKA
49TH
KRISTEN E. KEIFER
CE 13132
REGISTERED PROFESSIONAL ENGINEER

STATE OF ALASKA
DEPARTMENT OF TRANSPORTATION
AND PUBLIC FACILITIES

HOMER LAKE STREET
REHABILITATION

CURB & GUTTER DETAIL

DESIGNED BY CML
CHECKED BY KEK
DRAFTED BY VJS

XREFS N/A N/A

SCALE N/A

LAYOUT E3

DATE TIME 7/14/2015 3:32 PM

DRAWING LOCATION W:\Projects\Homer Lake Street Rehab - 52461\Civ3D12\Planset\52461_E01_Details.dwg

REVISIONS		
NO.	DATE	DESCRIPTION

STATE	PROJECT DESIGNATION	YEAR	SHEET NO.	TOTAL SHEETS
ALASKA	0001422/Z524610000	2017	E4	E6

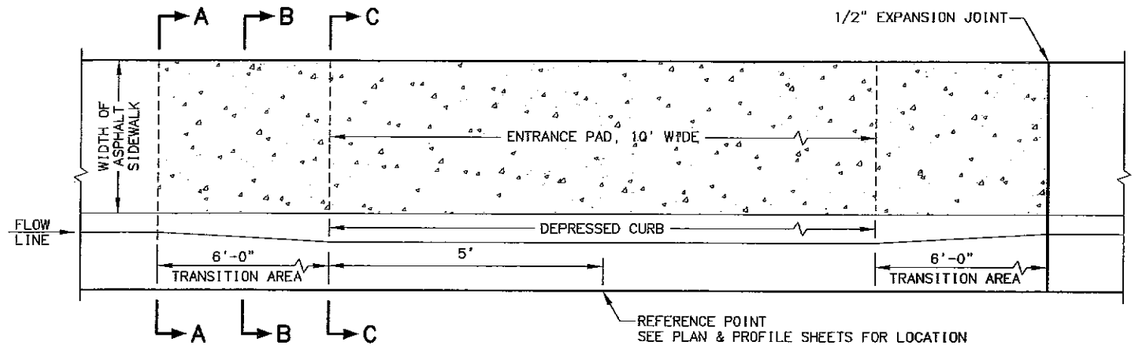

PLAN VIEW

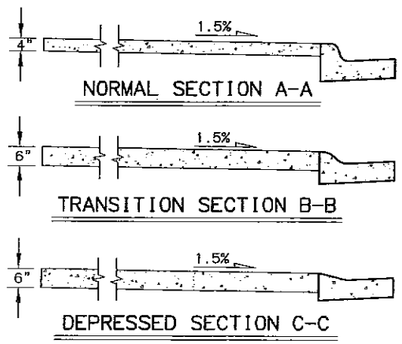

BIKE CURB CUT DETAILS

STATE OF ALASKA
49TH
KRISTEN E. KEIFER
CE 13132
REGISTERED PROFESSIONAL ENGINEER

STATE OF ALASKA
DEPARTMENT OF TRANSPORTATION
AND PUBLIC FACILITIES

HOMER LAKE STREET
REHABILITATION

REVIEW

BIKE LANE TO PATHWAY
TRANSITION DETAILS

DESIGNED BY SJR
CHECKED BY KEK
DRAFTED BY CJ/VS

XREFS N/A N/A

SCALE N/A

LAYOUT E4

DATE TIME 7/16/2015 2:42 PM

DRAWING LOCATION
W:\Projects\Homer Lake Street Rehab - 52461\Civ3D12\Planset\52461_E01_Details.dwg

REVISIONS		
NO.	DATE	DESCRIPTION

STATE	PROJECT DESIGNATION	YEAR	SHEET NO.	TOTAL SHEETS
ALASKA	0001422/Z524610000	2017	E5	E6

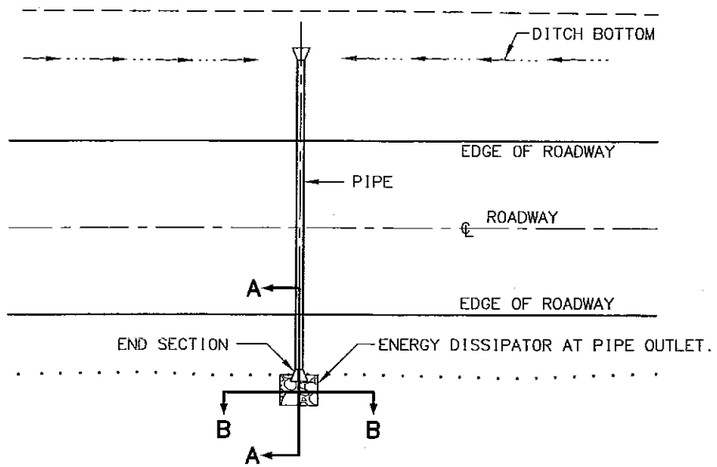

CULVERT PLAN VIEW

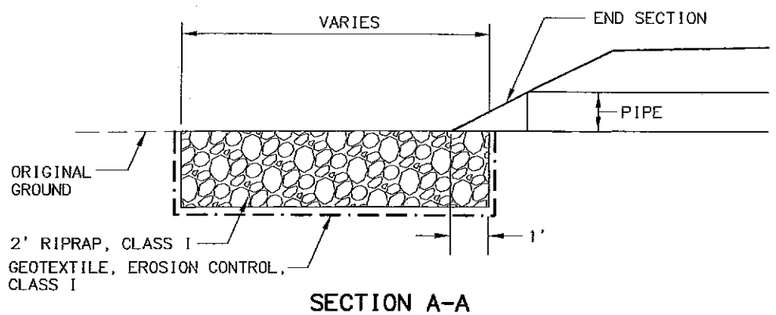

SECTION A-A

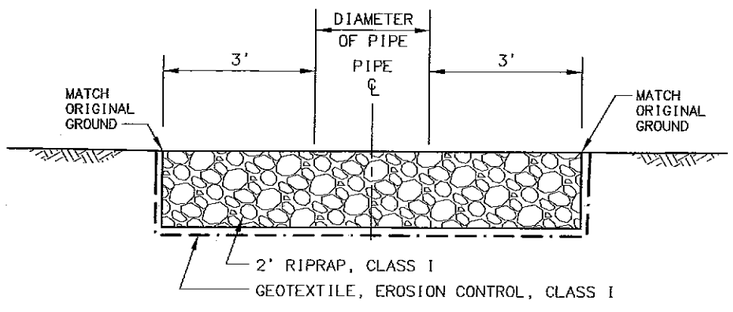

SECTION B-B

ENERGY DISSIPATOR

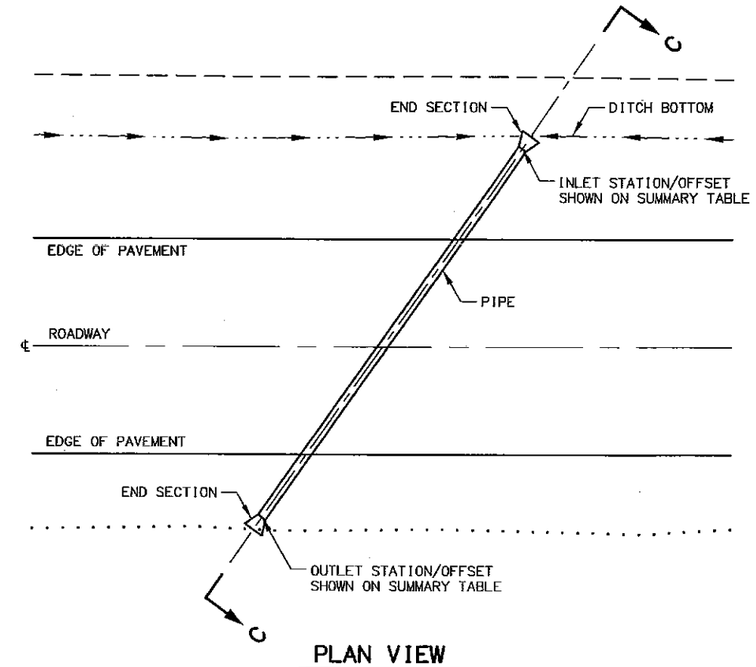

PLAN VIEW

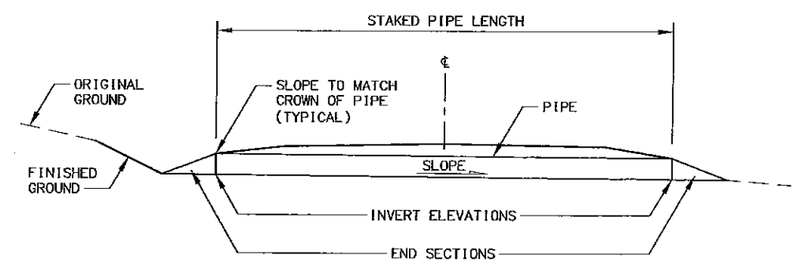

SECTION C-C

PIPE INSTALLATION DETAIL

STATE OF ALASKA
49TH
KRISTEN E. KEIFER
CE 13132
REGISTERED PROFESSIONAL ENGINEER

STATE OF ALASKA
DEPARTMENT OF TRANSPORTATION
AND PUBLIC FACILITIES

HOMER LAKE STREET
REHABILITATION

REVIEW

ENERGY DISSIPATOR AND
PIPE INSTALLATION DETAILS

DRAWING LOCATION
W:\Projects\Homer Lake Street Rehab - 52461\Civ3D12\Planset\52461_E01_Details.dwg

DATE	TIME
7/15/2015	2:42 PM

LAYOUT: E5
SCALE: N/A
XREFS: N/A, N/A

DESIGNED BY	EJR
CHECKED BY	KEK
DRAFTED BY	CJ/VS

REVISIONS		
NO.	DATE	DESCRIPTION

STATE	PROJECT DESIGNATION	YEAR	SHEET NO.	TOTAL SHEETS
ALASKA	0001422/Z524610000	2017	E6	E6

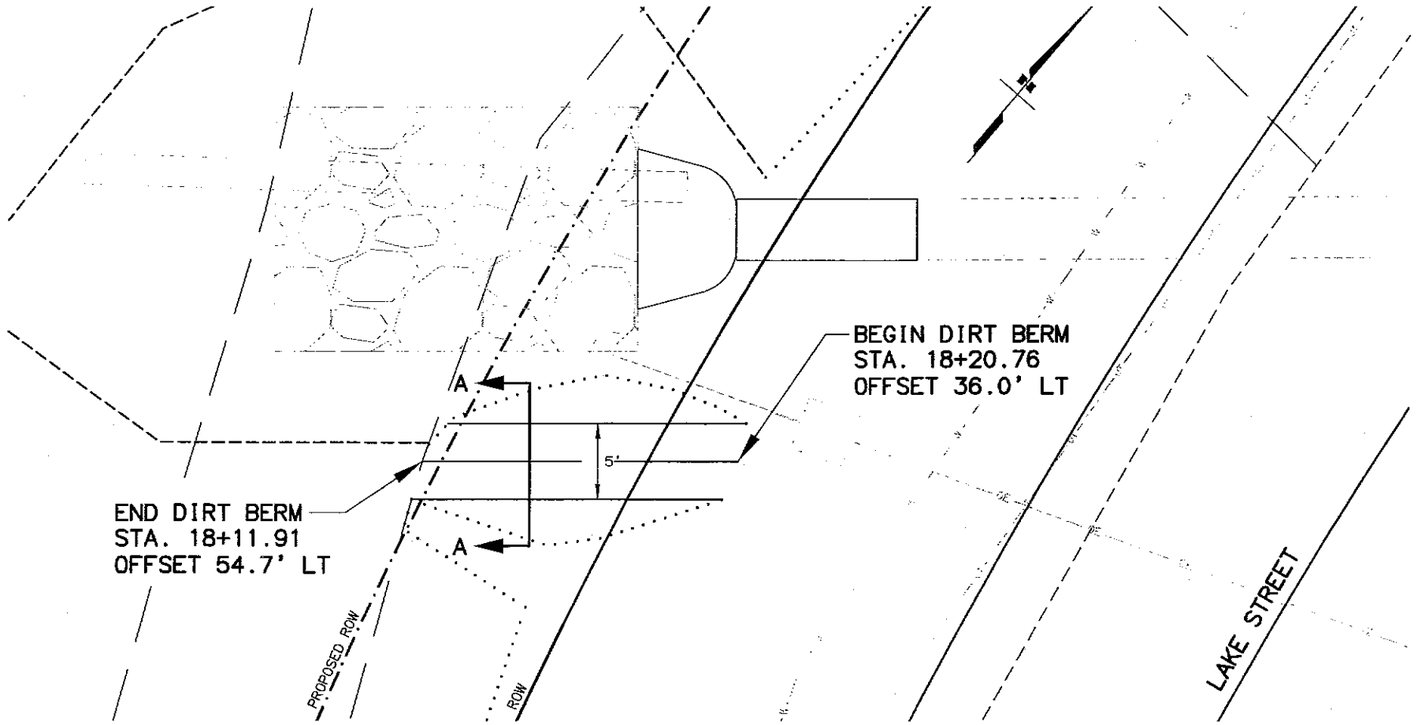

DIRT BERM PLAN VIEW

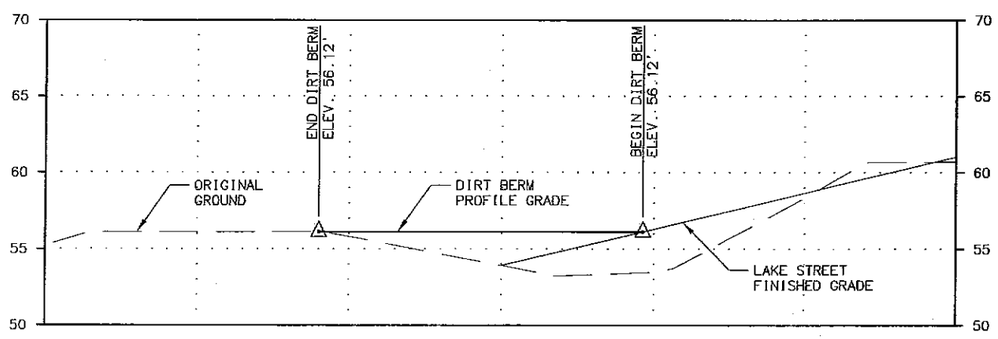

DIRT BERM PROFILE VIEW

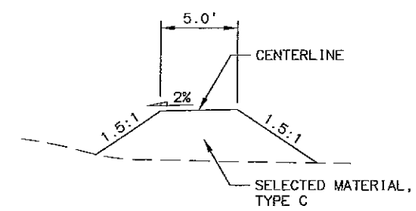

SECTION A-A

STATE OF ALASKA
49TH
KRISTEN E. KEIFER
CE 13132
REGISTERED PROFESSIONAL ENGINEER

STATE OF ALASKA
DEPARTMENT OF TRANSPORTATION
AND PUBLIC FACILITIES

HOMER LAKE STREET
REHABILITATION

REVISED

DIRT BERM DETAIL

DRAWING LOCATION
W:\Projects\Homer Lake Street Rehab - 52461\Civ3D12\Planset\52461_E06_Dirt Berm.dwg

DATE TIME
7/16/2015 3:41 PM

LAYOUT
E6

SCALE
1"=5'

XREFS
Border-Detail.dwg

DESIGNED BY SJR/ALH
CHECKED BY KEK
DRAFTED BY SJR

SHEET NO.	TOTAL SHEETS
F1	F8
STATE	YEAR
ALASKA	2017

PROJECT DESIGNATION
0001422/Z524610000

ADDENDUM NO.

ATTACHMENT NO.

REVISIONS

NO.	DATE	DESCRIPTION

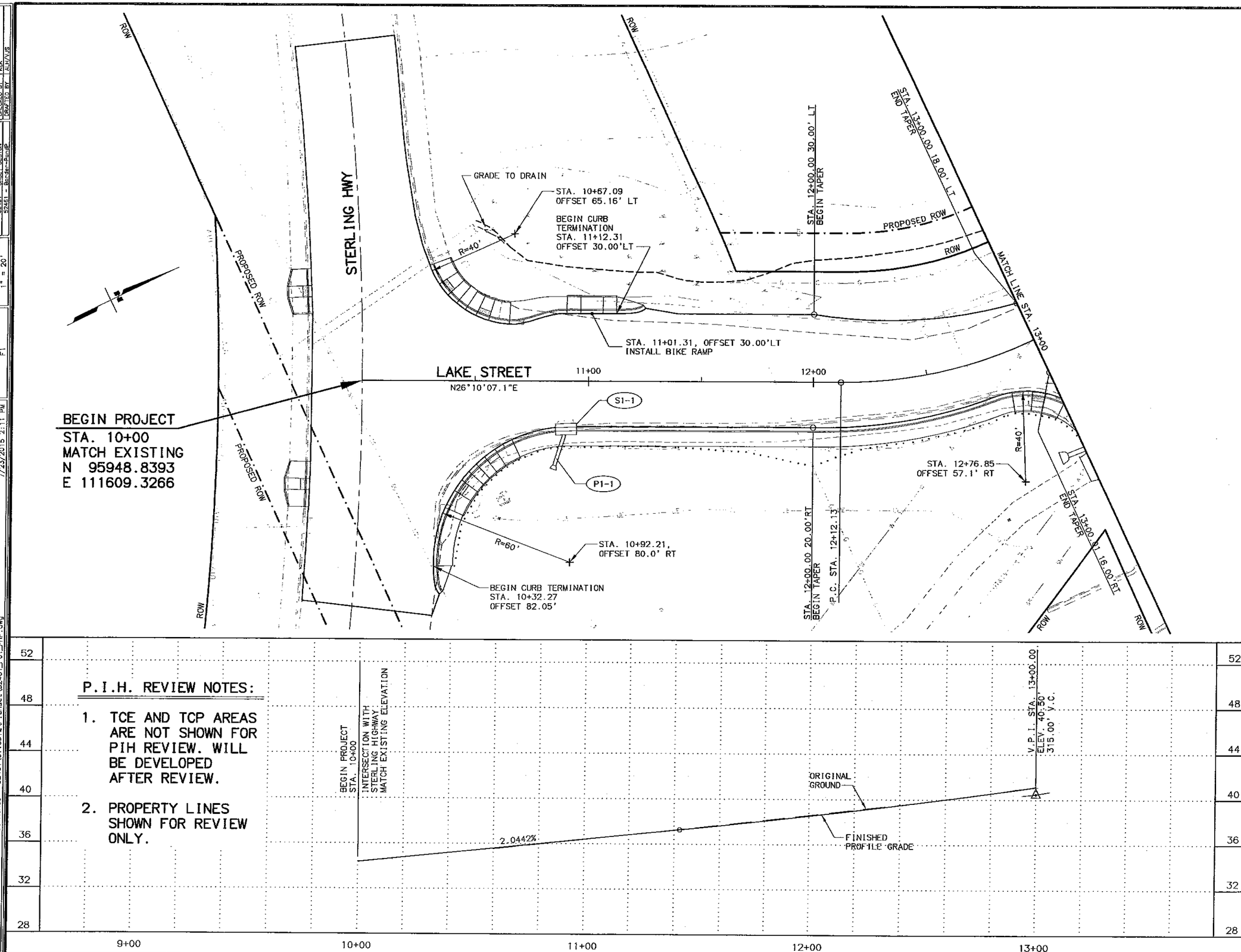

P.I.H. REVIEW NOTES:

1. TCE AND TCP AREAS ARE NOT SHOWN FOR PIH REVIEW. WILL BE DEVELOPED AFTER REVIEW.
2. PROPERTY LINES SHOWN FOR REVIEW ONLY.

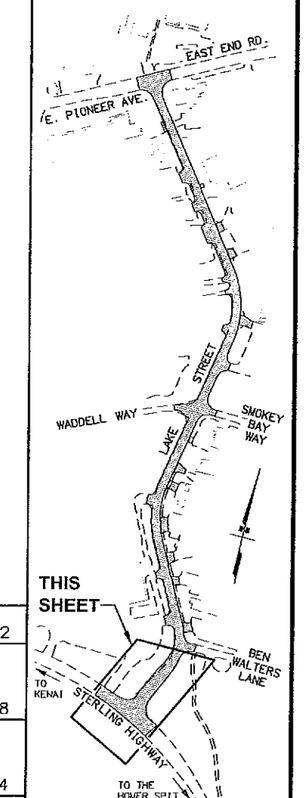

STATE OF ALASKA
49TH
KRISTEN E. KEIFER
CE 13132
REGISTERED PROFESSIONAL ENGINEER

STATE OF ALASKA
DEPARTMENT OF TRANSPORTATION
AND PUBLIC FACILITIES

HOMER LAKE STREET
REHABILITATION

PLAN AND PROFILE
B.O.R. TO STA 13+00

DRAWING LOCATION	DATE TIME	LAYOUT	SCALE	XREFS	DESIGNED BY ALH
W:\Projects\Homer Lake Street Rehab - 52461\C\v3D12\Planset\52461_F01_PnP.dwg	7/23/2015 2:11 PM	F1	1" = 20'	52461 - BASE - DESIGN 52461 - Border-PnpP	CHECKED BY KEK DRAFTED BY ALH/VJS

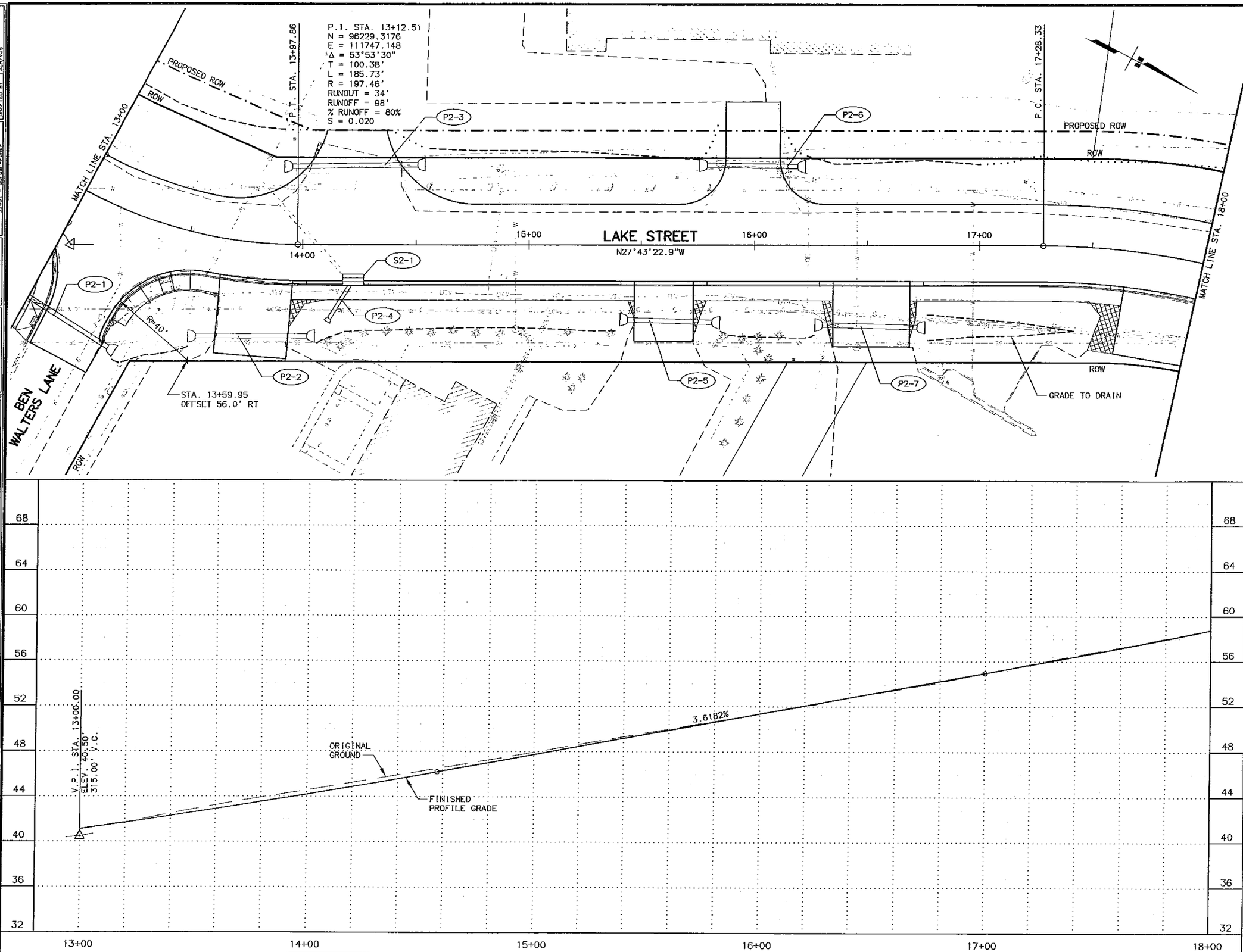

SHEET NO.	TOTAL SHEETS
F2	F8
STATE	YEAR
ALASKA	2017

PROJECT DESIGNATION
0001422/Z524610000

ADDENDUM NO.

ATTACHMENT NO.

REVISIONS

NO.	DATE	DESCRIPTION

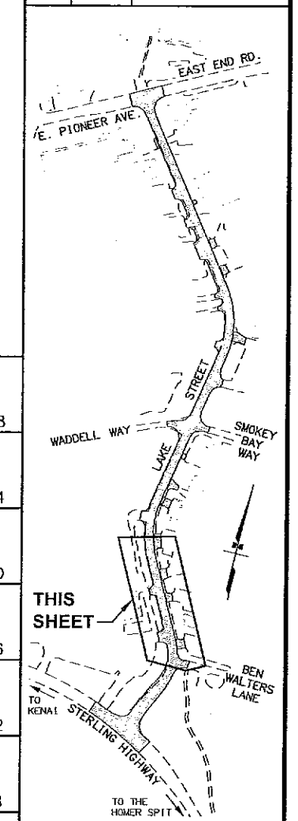

STATE OF ALASKA
49TH
KRISTEN E KEIFER
CE 13132
REGISTERED PROFESSIONAL ENGINEER

STATE OF ALASKA
DEPARTMENT OF TRANSPORTATION
AND PUBLIC FACILITIES

HOMER LAKE STREET
REHABILITATION
PLAN AND PROFILE
STA 13+00 TO STA 18+00

DRAWING LOCATION
W:\Projects\Homer Lake Street Rehab - 52461\Civ3D12\Planset\52461_F01_PnP.dwg

DATE	TIME
7/23/2015	2:11 PM

LAYOUT
F2

SCALE
1" = 20'

XREFS
52461 - BASE - DESIGN
52461 - Border-PandP

DESIGNED BY	ALH
CHECKED BY	KEK
DRAFTED BY	ALH/VJS

P.I. STA. 18+41.82
N = 96711.1635
E = 111493.927
Δ = 37°57'26"
T = 113.49'
L = 218.62'
R = 330.00'
RUNOUT = 36'
RUNOFF = 102'
% RUNOFF = 80%
S = 0.056

P.T. STA. 19+46.95

DIRT BERM
SEE BERM
DETAIL SHEET

P3-1

ROW

PROPOSED ROW

STA. 21+74.47
OFFSET 58.0'LT

R=40'

WADDELL WAY

P3-6

STA. 22+94.58
OFFSET 58.0'LT

PROPOSED ROW

R=40'

ROW

MATCH LINE STA. 18+00

19+00 20+00 21+00 22+00

LAKE STREET

N10°14'03.1"E

S3-1

P3-2 P3-3 P3-4 P3-5

STA. 22+11.80
OFFSET 56.0' RT

R=40'

NOTE: WHEN REPLACING PIPE 3-5, RETURN GRAVEL PARKING LOT TO EXISTING CONDITION.

SMOKEY BAY WAY

ROW

MATCH LINE STA. 23+00

V.P.I. STA. 18+50.00
ELEV. 60.40'
300.00' V.C.

FINISHED PROFILE GRADE

ORIGINAL GROUND

88 84 80 76 72 68 64 60 56 52

18+00 19+00 20+00 21+00 22+00 23+00

SHEET NO.	TOTAL SHEETS
F3	F8
STATE	YEAR
ALASKA	2017

PROJECT DESIGNATION

0001422/Z524610000

ADDENDUM NO.

ATTACHMENT NO.

REVISIONS

NO.	DATE	DESCRIPTION

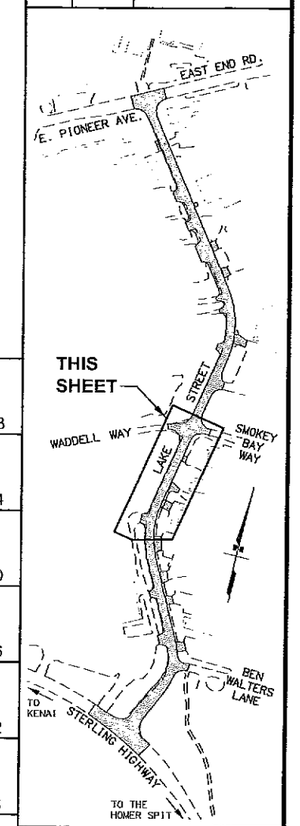

STATE OF ALASKA
49TH
KRISTEN E KEIFER
CE 13132
REGISTERED PROFESSIONAL ENGINEER

STATE OF ALASKA
DEPARTMENT OF TRANSPORTATION
AND PUBLIC FACILITIES

HOMER LAKE STREET
REHABILITATION

PLAN AND PROFILE
STA 18+00 TO STA 23+00

DRAWING LOCATION
W:\Projects\Homer Lake Street Rehab - 52461\Civ3012\Flanset\52461_F01_PnP.dwg

DATE TIME 7/23/2015 2:11 PM
LAYOUT F3
SCALE 1" = 20'
XREFS 52461 - BASE - DESIGN 52461 - Border-PandP
DESIGNED BY ALH
CHECKED BY KEK
DRAFTED BY ALH/VJS

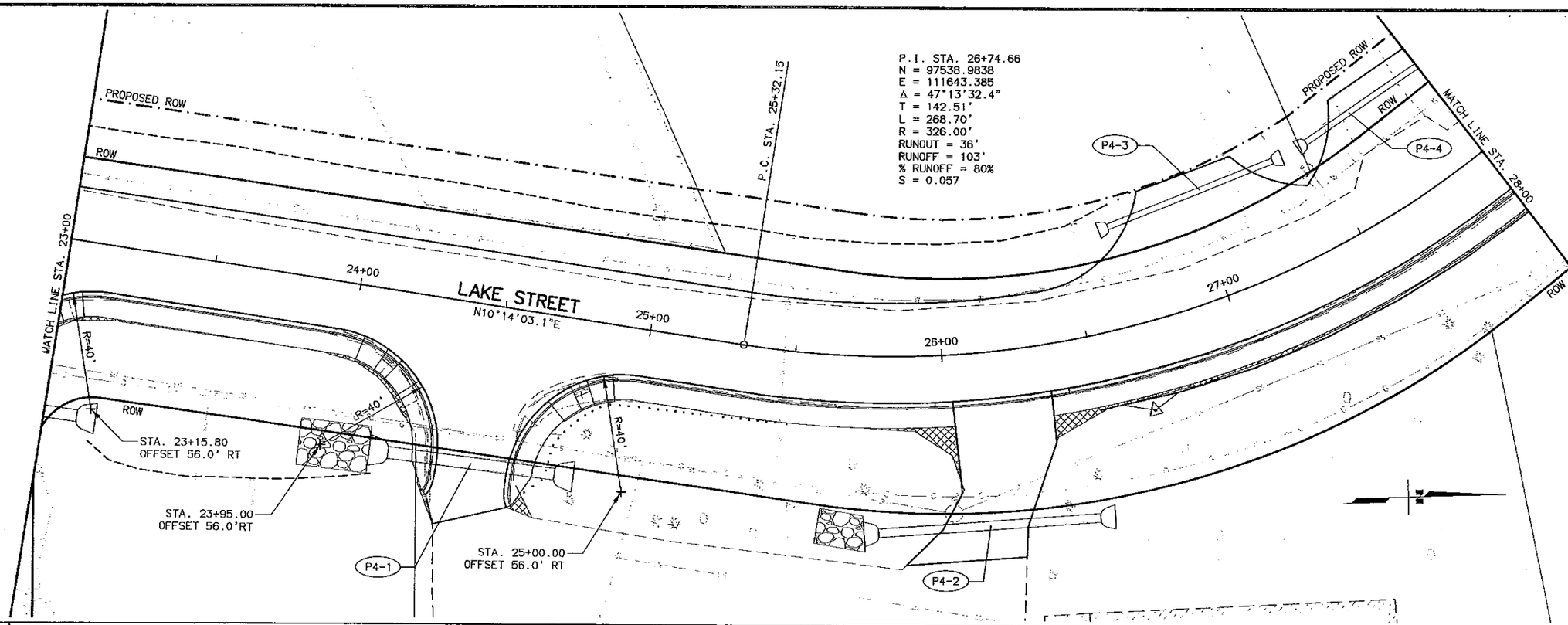

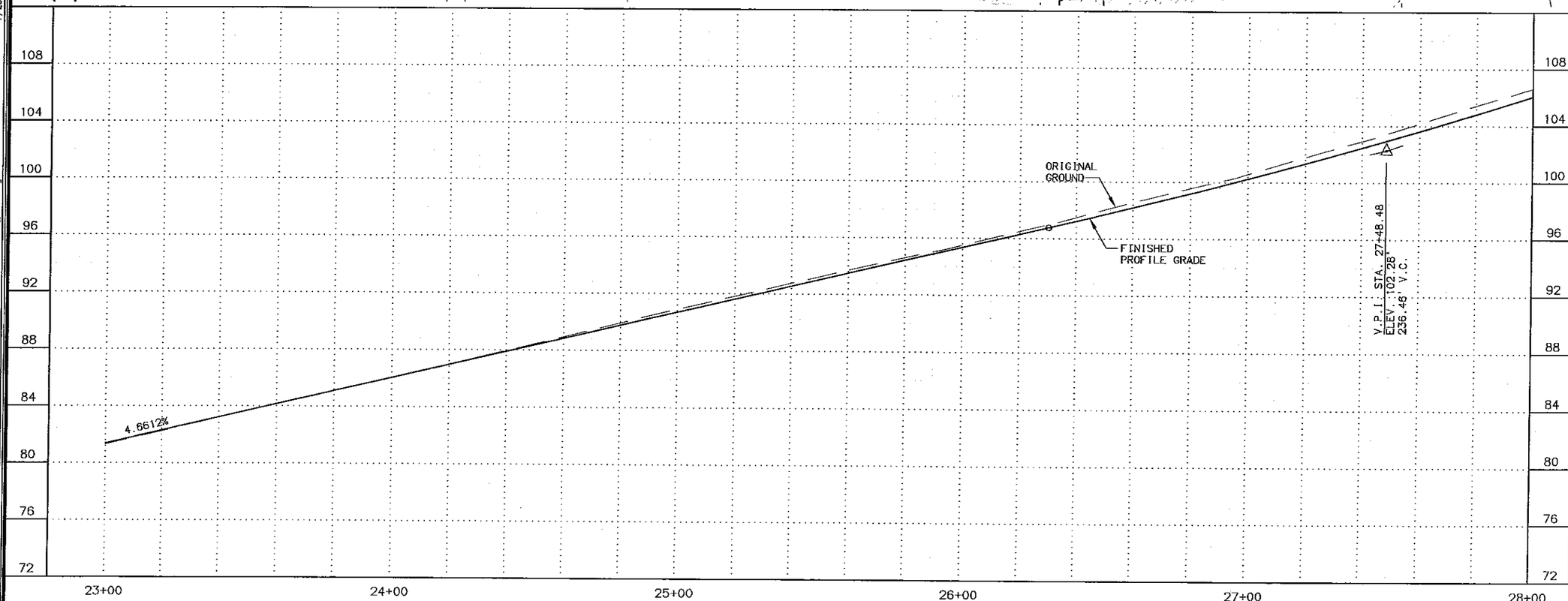

SHEET NO.	TOTAL SHEETS
F4	F8
STATE	YEAR
ALASKA	2017

PROJECT DESIGNATION
0001422/Z524610000

ADDENDUM NO.

ATTACHMENT NO.

REVISIONS

NO.	DATE	DESCRIPTION

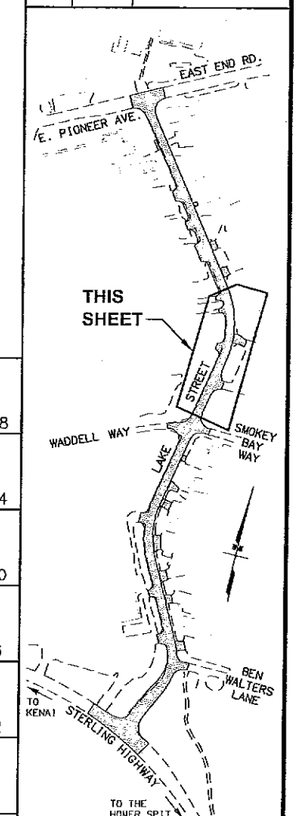

STATE OF ALASKA
49TH
KRISTEN E KEIFER
CE 13132
REGISTERED PROFESSIONAL ENGINEER

STATE OF ALASKA
DEPARTMENT OF TRANSPORTATION
AND PUBLIC FACILITIES

HOMER LAKE STREET
REHABILITATION
PLAN AND PROFILE
STA 23+00 TO STA 28+00

REVISED

DESIGNED BY ALK
CHECKED BY KEK
DRAFTED BY ALK/KJS

XREFS
52461 - BASE DESIGN
52461 - Border-PlanP

SCALE
1" = 20'

LAYOUT
F4

DATE TIME
7/23/2015 2:11 PM

DRAWING LOCATION
W:\Projects\Homer Lake Street Rehab - 52461\C1v3D12\Planset\52461_F01_PnP.dwg

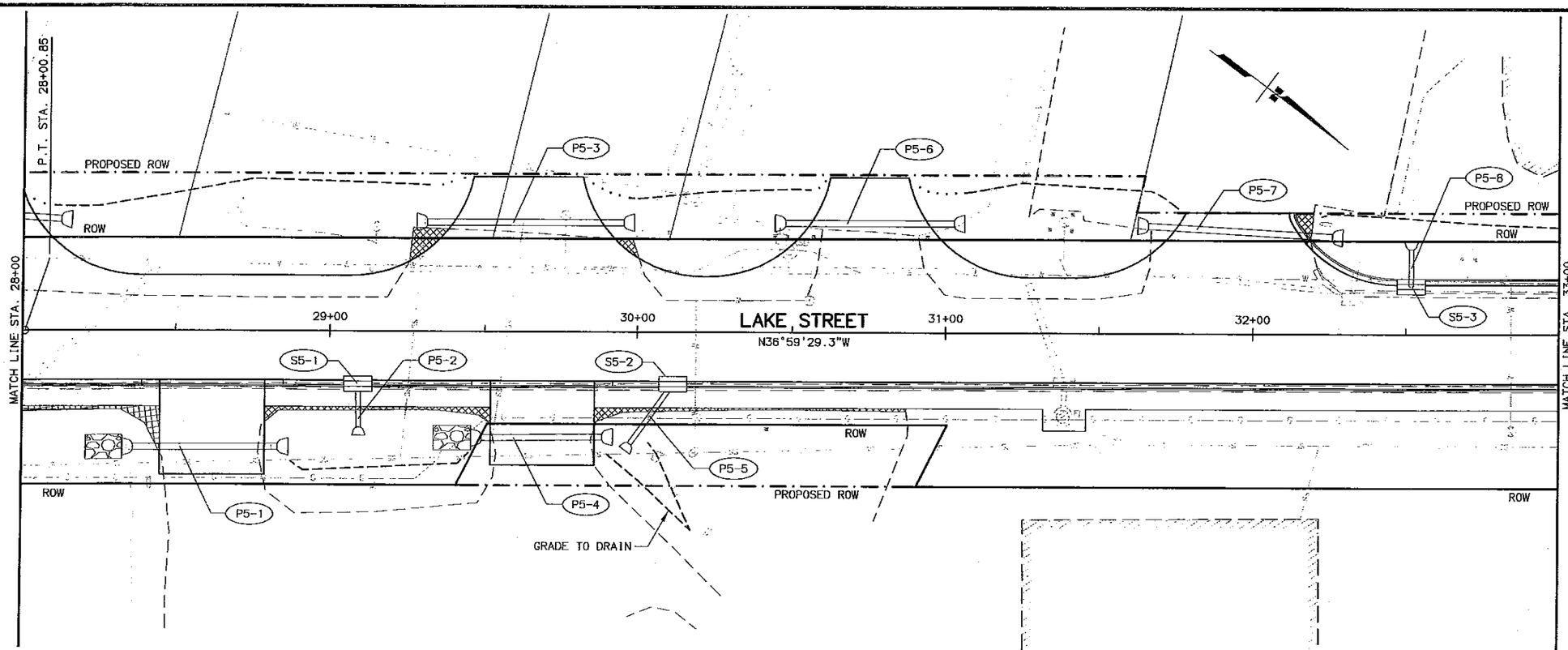

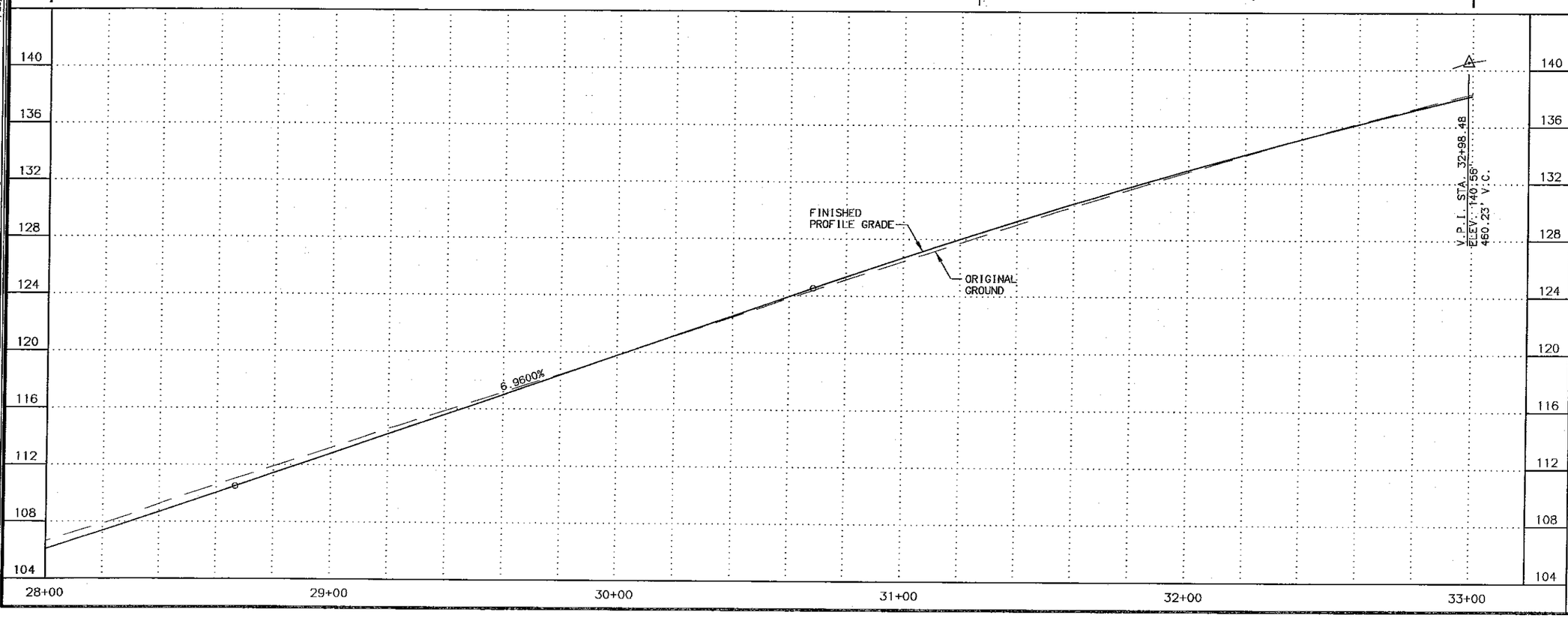

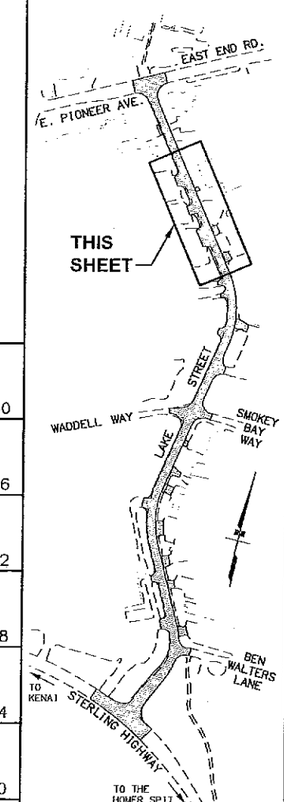

SHEET NO.	TOTAL SHEETS
F5	F8
STATE	YEAR
ALASKA	2017

PROJECT DESIGNATION
0001422/Z524610000

ADDENDUM NO.

ATTACHMENT NO.

REVISIONS

NO.	DATE	DESCRIPTION

STATE OF ALASKA
49TH
KRISTEN E KEIFER
CE 13132
REGISTERED PROFESSIONAL ENGINEER

STATE OF ALASKA
DEPARTMENT OF TRANSPORTATION
AND PUBLIC FACILITIES

HOMER LAKE STREET
REHABILITATION
PLAN AND PROFILE
STA 28+00 TO STA 33+00

NOT FOR CONSTRUCTION

DRAWING LOCATION
W:\Projects\Homer Lake Street Rehab - 52461\Civ3D12\Flonset\52461_F01_PnP.dwg

DATE TIME
7/23/2015 2:11 PM

LAYOUT
F5

SCALE
1" = 20'

XREFS
52461 - BASE DESIGN
52461 - Border-PnP

DESIGNED BY ALH
CHECKED BY KEK
DRAFTED BY ALH/VJS

SHEET NO.	TOTAL SHEETS
F6	F8
STATE	YEAR
ALASKA	2017

PROJECT DESIGNATION: 0001422/Z524610000

ADDENDUM NO.

ATTACHMENT NO.

REVISIONS

NO.	DATE	DESCRIPTION

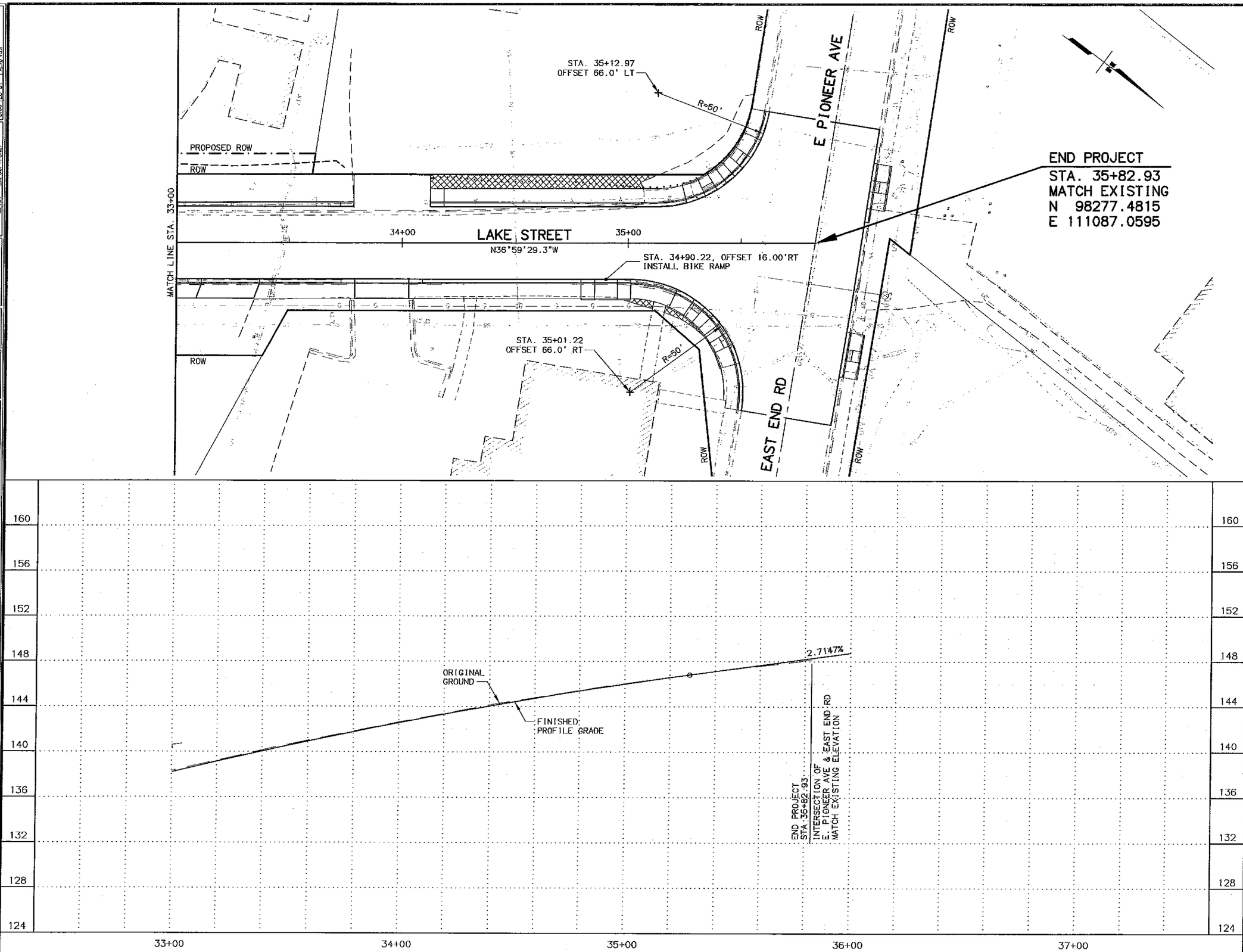

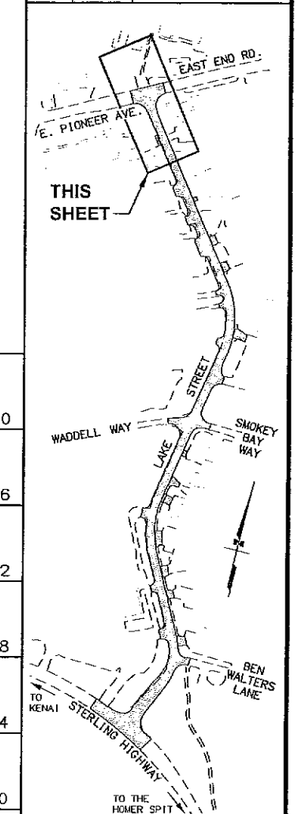

STATE OF ALASKA
49TH
KRISTEN E KEIFER
CE 13132
REGISTERED PROFESSIONAL ENGINEER

STATE OF ALASKA
DEPARTMENT OF TRANSPORTATION
AND PUBLIC FACILITIES

HOMER LAKE STREET
REHABILITATION

PLAN AND PROFILE
STA 33+00 TO E.O.P.

DRAWING LOCATION
W:\Projects\Homer Lake Street Rehab - 52461\Civ3D12\Planset\52461_F01_PnP.dwg

DATE TIME: 7/23/2015 2:11 PM
LAYOUT: F6
SCALE: 1" = 20'

XREFS
52461 - BASE DESIGN
52461 - Border-TitleP

DESIGNED BY: ALM
CHECKED BY: KEK
DRAFTED BY: ALM/VJS

Drive 1L Station 14+24

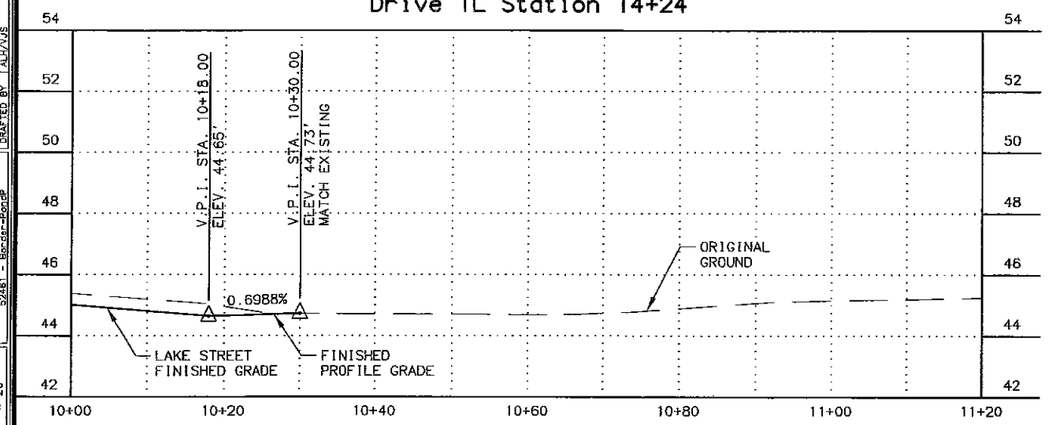

Drive 2L Station 15+99

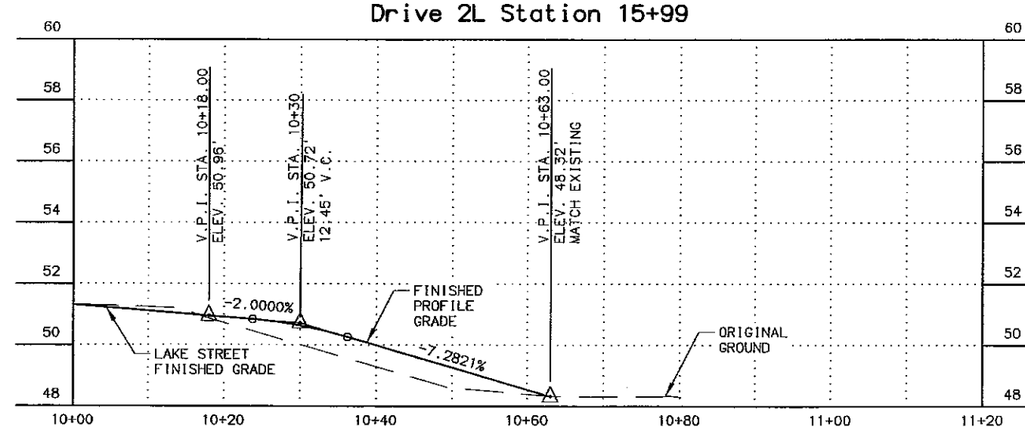

Waddell Way Station 22+68

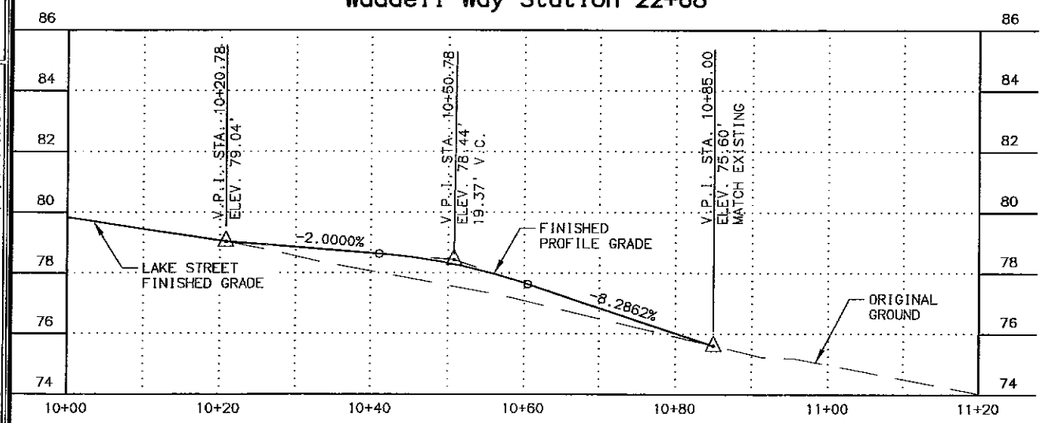

Drive 5L Station 27+00

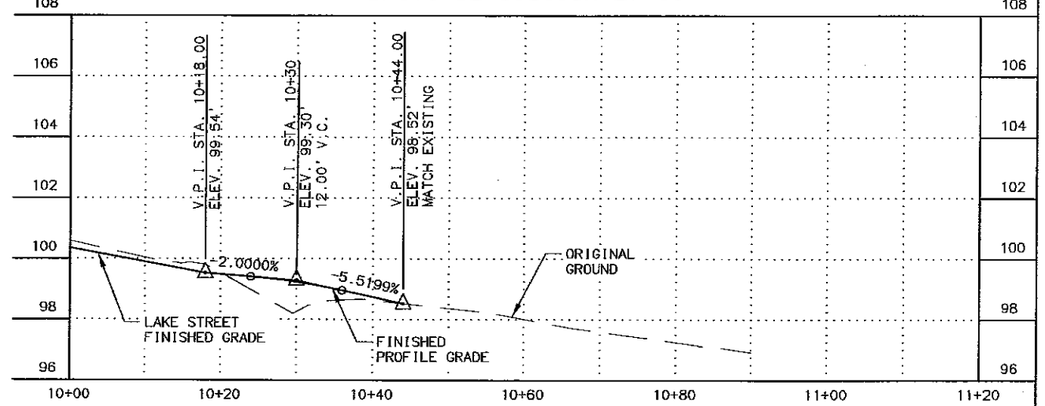

Drive 6L Station 27+82

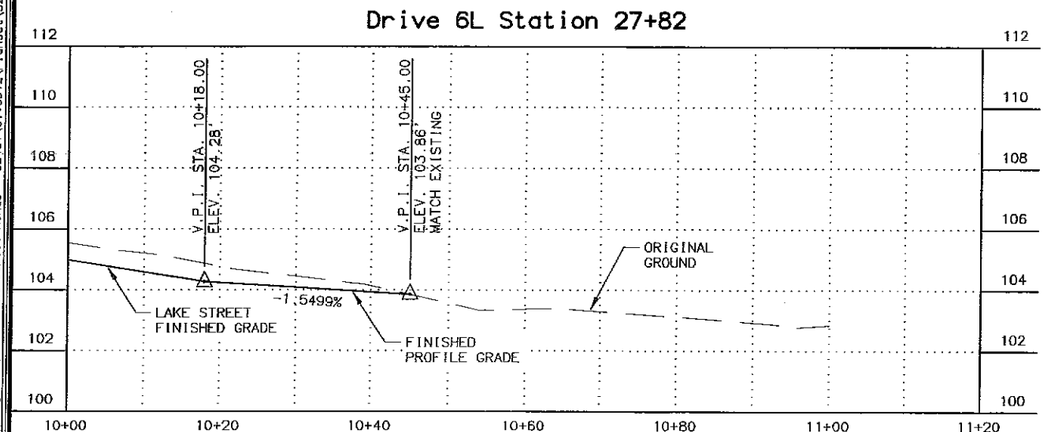

Drive 7L Station 29+64

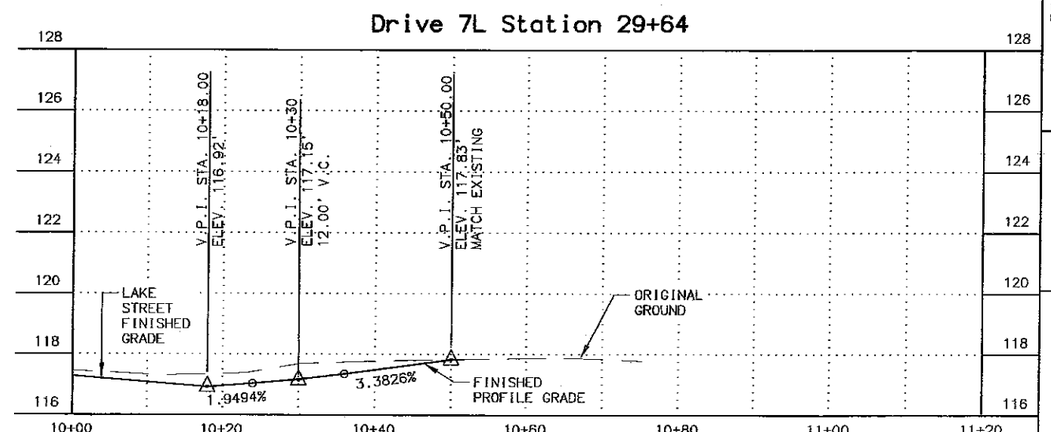

SHEET NO.	TOTAL SHEETS
F7	F8
STATE	YEAR
ALASKA	2017

PROJECT DESIGNATION: 0001422/Z524610000

ADDENDUM NO.

ATTACHMENT NO.

REVISIONS

NO.	DATE	DESCRIPTION

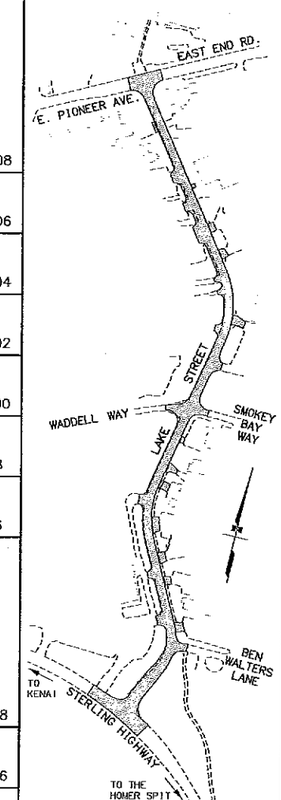

STATE OF ALASKA
49TH
KRISTEN E KEIFER
CE 13132
REGISTERED PROFESSIONAL ENGINEER

STATE OF ALASKA
DEPARTMENT OF TRANSPORTATION AND PUBLIC FACILITIES

HOMER LAKE STREET REHABILITATION

APPROACH PROFILES

REVIEW

DESIGNED BY ALH
CHECKED BY KEK
DRAWN BY ALH/VJS

XREF'S
52461 - BASE - DESIGN
52461 - Base-Topo-Surf

SCALE 1" = 20'

LAYOUT F7

DATE TIME 7/16/2015 3:15 PM

DRAWING LOCATION W:\Projects\Homer Lake Street Rehab - 52461\Civ3D12\Planset\52461_F07_Approach.dwg

Drive 8L Station 30+75

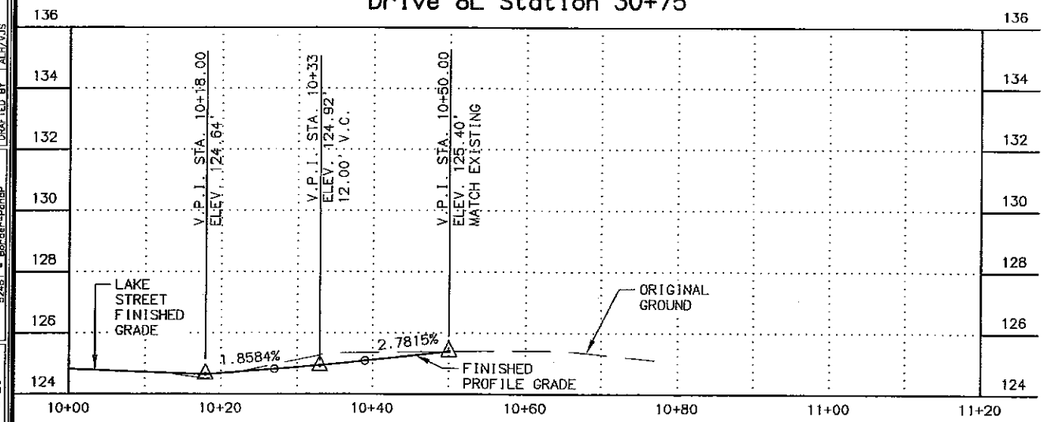

Drive 9L Station 31+95

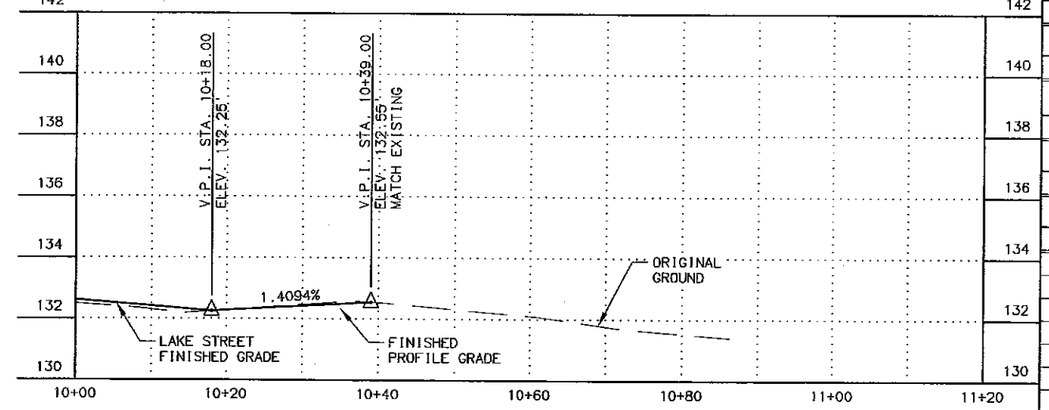

Drive 10L Station 33+95

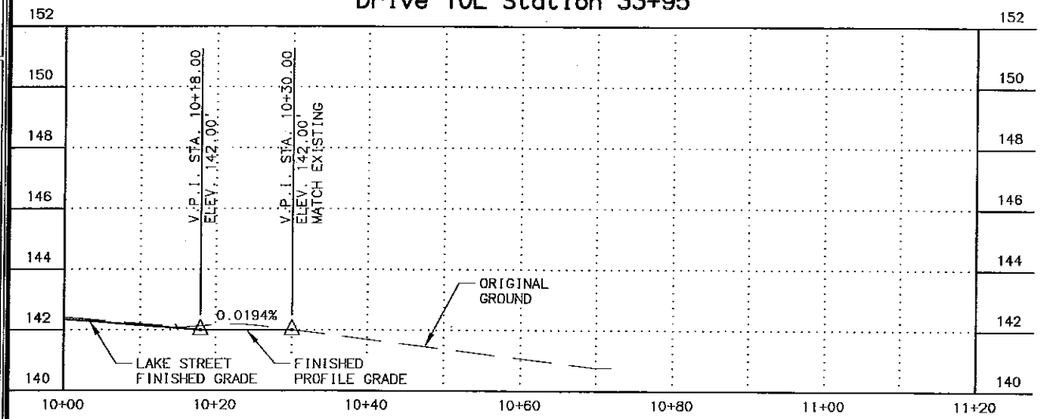

SHEET NO.	TOTAL SHEETS
F8	F8
STATE	YEAR
ALASKA	2017

PROJECT DESIGNATION: 0001422/Z524610000

ADDENDUM NO.

ATTACHMENT NO.

REVISIONS

NO.	DATE	DESCRIPTION

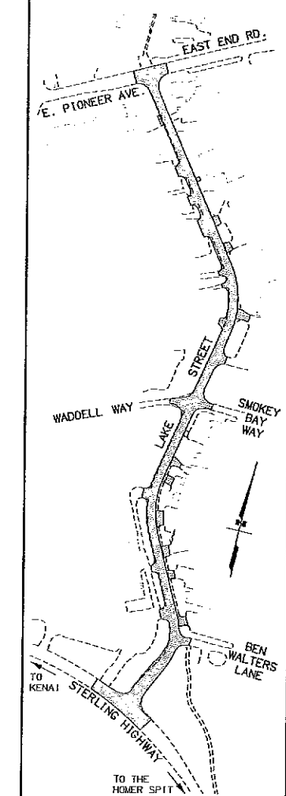

STATE OF ALASKA
49TH
KRISTIEN E KEIFER
CE 13132
REGISTERED PROFESSIONAL ENGINEER

STATE OF ALASKA
DEPARTMENT OF TRANSPORTATION
AND PUBLIC FACILITIES

HOMER LAKE STREET
REHABILITATION

APPROACH PROFILES

DESIGNED BY ALH
CHECKED BY KBK
DRAFTED BY ALH/VJS

XREF'S
52461 - BASE DESIGN
52461 - Border-PerimP

SCALE 1" = 20'

LAYOUT F8

DATE TIME 7/16/2015 3:15 PM

DRAWING LOCATION
W:\Projects\Homer Lake Street Rehab - 52461\Civ3D12\Flanset\52461_F07_Approach.dwg

LAST REVISION	
DATE	DESCRIPTION
10/15/2013	CENTRAL REGION DETAIL

STATE	PROJECT DESIGNATION	YEAR	SHEET NO.	TOTAL SHEETS
ALASKA	0001422/Z524610000	2017	H1	H7

SYMBOL LEGEND

EXISTING	PROPOSED	
		LOAD CENTER
		TRAFFIC CONTROLLER
		BEACON CONTROLLER
		TYPE 1A JUNCTION BOX
		TYPE II JUNCTION BOX
		TYPE III JUNCTION BOX
		TYPE IV JUNCTION BOX
		ELECTROLIER
HT#	HT#	HIGHTOWER
		SIGNAL POLE WITH MASTARM
		PEDESTRIAN PUSH BUTTON
		PEDESTRIAN SIGNAL
		VEHICULAR SIGNAL
		VEHICULAR SIGNAL LEFT
		VEHICULAR SIGNAL RIGHT
		OPTICAL DETECTOR
GPS	GPS	GPS DETECTOR
CAM	CAM	CAMARA DETECTOR
RAD	RAD	RADAR DETECTOR
		LOOP DETECTOR
		ANTENNA, YAGI OR OMNI
		MASTARM BEACON
		RURAL BEACON
		SCHOOL ZONE BEACON
		LOOP DETECTOR CONDUIT
		SIGNAL CONDUIT
		LIGHTING CONDUIT
		SIGNAL & LIGHTING CONDUI
		CONDUIT BORING
	2"	CONDUIT SIZE IN INCHES
	1	SIGN POST
	I/C	INTERCONNECT

PAVEMENT MARKING LEGEND

PROPOSED	
	PROJECT CENTERLINE
8"W	8" WHITE SOLID STRIPE
4"W	4" WHITE SOLID STRIPE
4"W SKIP	4" WHITE SKIP STRIPE 10' STRIPES AND 30' SPACES
8"W GUIDE SKIP	8" WHITE LANE GUIDE SKIP LANE CONTINUATION OR TURN SKIP 1' STRIPES AND 3' SPACES
8"Y	8" YELLOW SOLID STRIPE
4"Y	4" YELLOW SOLID STRIPE
4"Y SKIP	4" YELLOW SKIP STRIPE 10' STRIPES AND 30' SPACES
+20	STRIPING CHANGE STATION INTERVAL
24"W (TYP)	2' CROSSWALK OR STOPBAR
10'	LADDER CROSSWALK LAYOUT 2' WIDE RUNGS WITH 2' SPACES ALIGNED TO AVOID TIRE PATHS
12', (2)-4"Y 3" APART, VARIES, 18"Y @ 45°	TYPICAL PAINTED MEDIAN

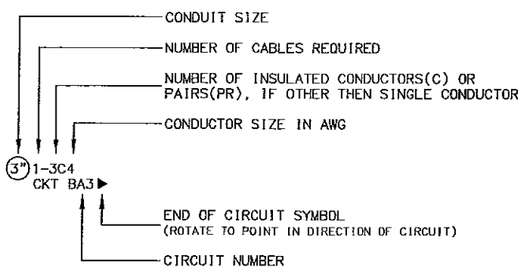

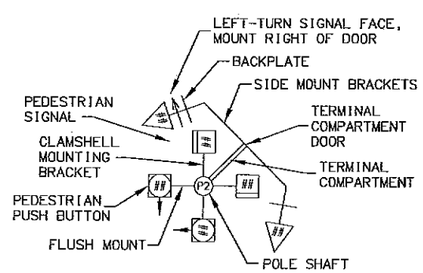

POLE SHAFT LEGEND

CALL BEFORE YOU DIG!

CONTRACTOR SHALL CALL A MINIMUM OF 3 DAYS IN ADVANCE OF CONSTRUCTION

ALASKA DIGLINE....907-278-3121 OR 800-478-3121

CALL OR GO TO WWW.AKONECALL.COM/STATEWIDE.HTM FOR MEMBER LIST OF WHO WILL BE NOTIFIED

ABBREVIATIONS

℄ - CENTERLINE
SIG - SERVICE TO CONTROLLER
INTX - INTERSECTION
INTX L - INTERSECTION LIGHTING
LTG - LIGHTING
PRE 2 - PREEMPTION #
PRE CON 2 - PREEMPTION CONTROLLER #
LC - LOAD CENTER
TC - TRAFFIC CONTROLLER
P1 - TRAFFIC SIGNAL POLE #
PEC - PHOTOELECTRIC CELL
YAGI - DIRECTIONAL ANTENNA
OMNI - OMNI DIRECTIONAL ANTENNA
HEAD - VEHICULAR SIGNAL HEAD
PED B 28 - PEDESTRIAN PUSH BUTTON #
PEDI - PEDESTRIAN SIGNAL HEAD
RMC - RIGID METAL CONDUIT
PE - POLYETHYLENE CONDUIT
LFNC - LIQUIDTIGHT FLEXIBLE NONMETALLIC CONDUIT
AWG - AMERICAN WIRE GAUGE
NB - NORTH BOUND
EB - EAST BOUND
SB - SOUTH BOUND
WB - WEST BOUND

SIGNING & STRIPING NOTES:

1. ALL STATION LOCATIONS FOR SIGN INSTALLATION ARE APPROXIMATE. INSTALL SIGNS AT LOCATIONS AS DIRECTED BY THE ENGINEER.
2. USE THE FOLLOWING DEFINITIONS TO DECIPHER THE ABBREVIATED SIGN POST TYPES IN THE SIGN SUMMARY SHEETS.
   A. PT MEANS A PERFORATED STEEL TUBE.
   B. T MEANS A SQUARE STEEL TUBE.
   C. P MEANS A ROUND STEEL PIPE.
   D. W MEANS A WIDE FLANGE BEAM.
   E. POPL MEANS A POLE PLATE INSTALLED PER ITS STANDARD DRAWING S-23
3. FOR SIGNS SUPPORTED BY MULTIPLE POSTS, FABRICATE THE POSTS WITH THEIR TOPS LEVEL WITH ONE ANOTHER.
4. FOR PERFORATED STEEL TUBE SIGNPOSTS, INSTALL THE CONCRETE FOUNDATION OPTION SHOWN ON STANDARD DRAWING S-30.03. TRIM EACH PT POST TO LIMIT THE LENGTH INSERTED INTO THE FOUNDATION TO 12 INCHES.
5. FABRICATE GUIDE SIGNS ACCORDING TO THE SHOP DRAWINGS INCLUDED IN THE APPENDICES OF PART 4, CONTRACT PROVISIONS AND SPECIAL PROVISIONS. TRIM THE CORNERS OF ALL SIGNS TO THE RADIUS SHOWN ON EACH SHOP DRAWING.
6. ERECT NEW SIGNS BEFORE REMOVAL OF EXISTING SIGNS WITH SIMILAR MESSAGE. NOTIFY THE ENGINEER A MINIMUM OF 14 DAYS PRIOR TO BEGINNING SIGN REMOVAL AND SALVAGE OR DISPOSAL ACTIVITIES.
7. FOR SIGNS SUPPORTED BY MULTIPLE TUBES OR PIPES, LOCATE THE OUTER POSTS ON MAXIMUM SIX FEET CENTERS. INSTALL ADJACENT WIDE FLANGE POSTS ON MINIMUM EIGHT FEET CENTERS.
8. FOR ALL FINAL PAVEMENT MARKINGS USE METHYLMETHACRYLATE MATERIALS. LONGITUDINAL MARKINGS SHALL BE INLAYED AT 250 MILS, TRANSVERSE AND SYMBOL MARKINGS TO BE INLAID AT 250 MILS, CORE STRIPES SHALL BE SURFACE APPLIED AT 60 MILS.
9. DIMENSIONS REFER TO THE CENTER OF STRIPE AND THE EDGE OF PAVEMENT OR FACE OF CURB WHEN PRESENT.
10. IF THE NEW AND EXISTING PAVEMENT MARKINGS ARE NOT ALIGNED AT MATCH LINE, TRANSITION BETWEEN THE TWO USING A 100:1 TAPER ON THE NEW PAVEMENT.
11. WHERE NEW STRIPING IS TO EXTEND BEYOND PAVING LIMITS, REMOVE EXISTING STRIPING IN ACCORDANCE WITH SUBSECTION 670-3.04 TO THE EXTENT OF STRIPING LIMITS.

NOTES:

FOUNDATIONS NOTES:

1. STATION & C.L. REFERENCE ARE TO THE CENTER OF THE STRUCTURE, EXCEPT ON LOOPS WHICH ARE TO THE CENTER OF THE TRAILING EDGE OF THE LOOP (EDGE NEAREST INTERSECTION).
2. JUNCTION BOX LOCATIONS APPROXIMATE. LOCATE J-BOXES SO THAT THEY ARE LOCATED OUT OF THE PATHWAY, SIDEWALK, CURB RAMPS, AND DRAINAGE COLLECTION AREAS.
3. INSTALL LOAD CENTER AND TRAFFIC CONTROLLER FOUNDATIONS WITHIN 1-DEGREE OF PLUMB.
4. INSTALL ANCHOR BOLTS IN CAST FOUNDATIONS TO BE WITHIN 1:40 OF PLUMB.
5. TOPSOIL AND SEED ANY DISTURBED AREAS.

SIGNAL SYSTEM NOTES:

1. FURNISH THE SIGNAL AND LUMINAIRE MASTARM LENGTHS AND DIMENSIONS SPECIFIED ON THE POLE ELEVATIONS.
2. INSTALL DEVICES SUCH THAT THE DIMENSIONS SHOWN TO THE BOTTOM OF THE DEVICES ON THE POLE ELEVATIONS ARE MINIMUMS. VERTICAL DIMENSIONS TO SIGNAL HEADS ARE TO BOTTOM OF THE BACK PLATE.
3. INSTALL MAST ARMS PERPENDICULAR TO THE ROADWAY CENTERLINE. ACCEPTABLE VARIANCE IS +/- 1-DEGREE.
4. SALVAGE SIGNAL POLE ASSEMBLIES, SIGNS, SIGNAL FACES, AND LUMINARIES AND DELIVER TO MAINTENANCE AND OPERATIONS WITHIN 48-HOURS OF DECOMMISSIONING. COMPONENTS DAMAGED WHILE IN THE CONTRACTORS CUSTODY MUST BE REPLACED AT THE CONTRACTORS EXPENSE. REMOVE AND DISPOSE OF FOUNDATIONS.
5. SALVAGE EXISTING CONTROLLER CABINET AFTER NEW CONTROLLER CABINET IS IN SERVICE AND DELIVER TO MAINTENANCE AND OPERATIONS WITHIN 48-HOURS OF DECOMMISSIONING.
6. VEHICLE SIGNALS AND PEDESTRIAN SIGNALS SHALL BE LED MODULES.
7. REMOVE ABANDONED OR UNUSED TRAFFIC JUNCTION BOXES UNLESS OTHERWISE NOTED.
8. NEW SIGNAL HEADS THAT ARE MOUNTED BUT NOT IN OPERATION SHALL BE COVERED WITH A COMMERCIALLY AVAILABLE SIGNAL-SHIRT. EACH SIGNAL SHIRT SHALL FEATURE ELASTICIZED OPENINGS THAT FIT OVER THE VISORS AND AT LEAST TWO STRAPS TO SECURE IT TO THE SIGNAL. PROVIDE SHIRTS WITH A LEGEND THAT READS "OUT OF SERVICE" AND A CENTER SECTION THAT ALLOWS AN OPERATOR TO SEE THE INDICATIONS DURING SYSTEM TESTS.
9. SIGNAL HEADS ARE TO BE LOCATED PER FIGURE 4D-100, TYPICAL SIGNAL HEAD LOCATIONS, PER THE ALASKA TRAFFIC MANUAL. ACCEPTABLE VARIANCE IS +/- 1-FOOT.
10. AIM SIGNALS PER TABLE 660-2, THROUGH-SIGNAL AIMING POINT, OF THE SPECIAL PROVISIONS. SIGNALS SHALL ALSO BE AIMED SO AS NOT TO BE VISIBLE FROM SIDE STREET TRAFFIC. ACCEPTABLE VARIANCE IS +/- 5 DEGREES.
11. EXISTING CIRCUITS LISTED ON THE LOAD CENTER SUMMARY AND PLAN SHEETS WERE OBTAINED FROM AS-BUILT INFORMATION AND MUST BE VERIFIED BY THE CONTRACTOR PRIOR TO WORK INVOLVING THOSE CIRCUITS.

STATE OF ALASKA 49TH CHRISTOPHER L. BENTZ CE 12821 REGISTERED PROFESSIONAL ENGINEER

STATE OF ALASKA
DEPARTMENT OF TRANSPORTATION AND PUBLIC FACILITIES

HOMER LAKE STREET REHABILITATION

TRAFFIC LEGEND AND NOTES

DRAWING LOCATION
W:\Projects\Homer Lake Street Rehab - 52461\Civ3D12\Traffic\H1_TRAFFIC-LEGEND-AND-NOTES.dwg

DATE TIME 7/21/2015 4:21 PM | LAYOUT H1 | SCALE N/A | XREFS X_Traffic-Border-Detail N/A | DESIGNED BY MEF | CHECKED BY CLB | DRAFTED BY MEF

LAST REVISION	
DATE	DESCRIPTION
06/27/2013	CENTRAL REGION DETAIL - REPLACES STD. DWG. S-20.10

STATE	PROJECT DESIGNATION	YEAR	SHEET NO.	TOTAL SHEETS
ALASKA	0001422/Z524610000	2017	H2	H7

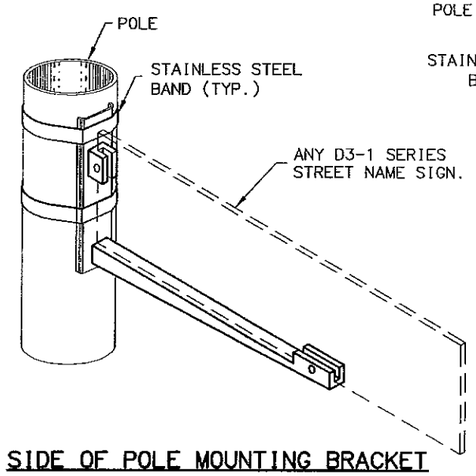

SIDE OF POLE MOUNTING BRACKET

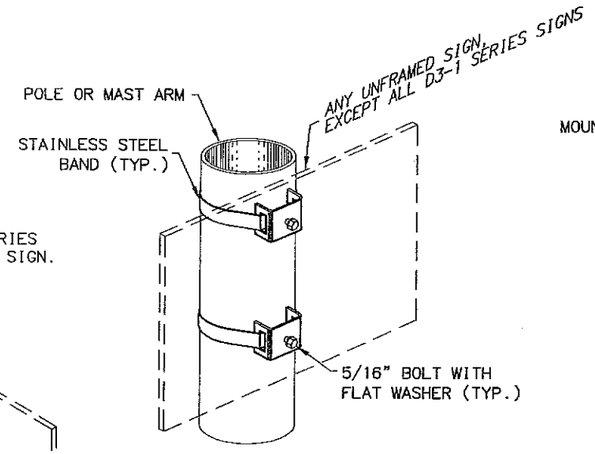

SADDLE BRACKETS

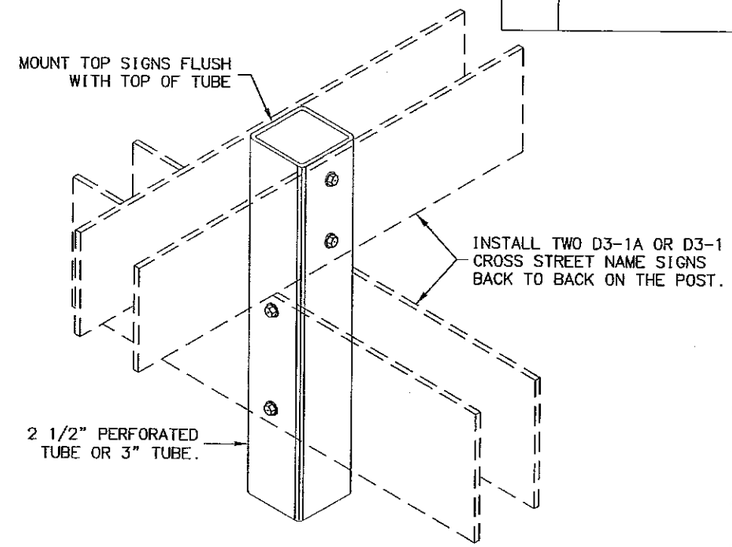

STREET NAME SIGN INSTALLATION

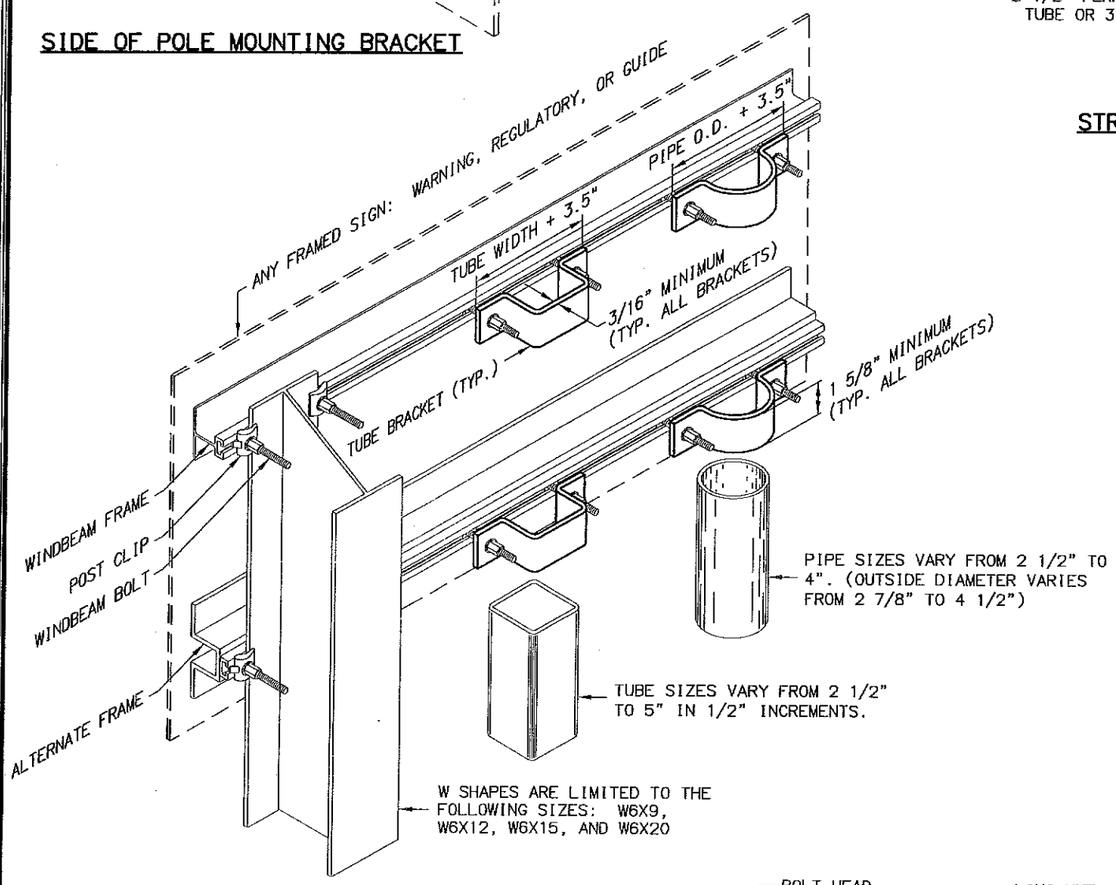

FRAMED SIGN ATTACHMENT BRACKETS

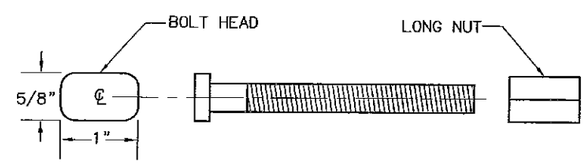

3/8" WINDBEAM BOLT AND LONG NUT

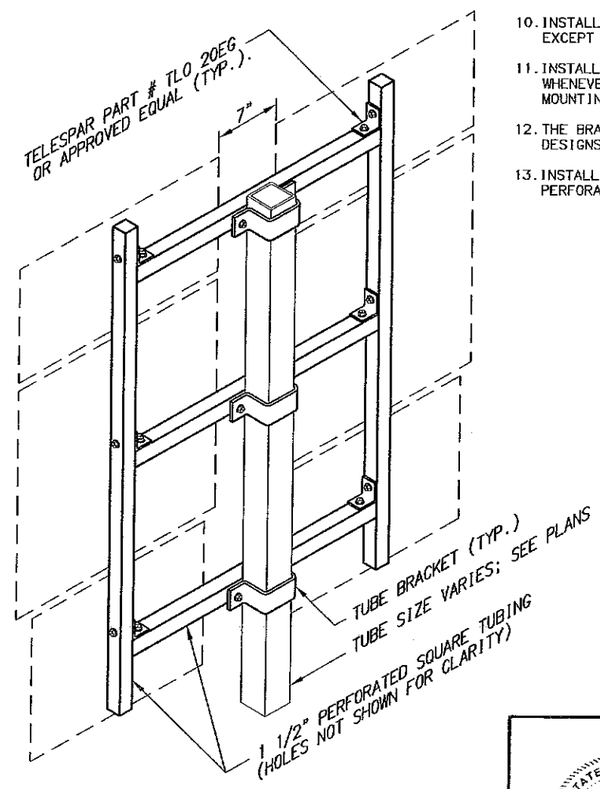

ROUTE MARKER TREE

NOTES:

1. EXCEPT FOR POLES AND MAST ARMS, ONLY USE TUBES TO SUPPORT SIGNS MOUNTED ON ONE POST.
2. ATTACH SIGNS, FRAMED AND UNFRAMED TO THEIR SUPPORTS WITH ZINC PLATED 3/8" BOLTS, EXCEPT ATTACH UNFRAMED SIGNS TO PERFORATED TUBES WITH ACCESSORY DRIVE RIVETS AND TO SADDLES WITH 5/16" BOLTS.
3. BOLT UNFRAMED SIGNS DIRECTLY TO TUBES, AND ATTACH THEM TO POLES AND MAST ARMS WITH TWO SADDLES.
4. ATTACH BRACKETS TO POLES AND MAST ARMS WITH DOUBLE WRAPS OF 3/4" WIDE BY 0.020" THICK STAINLESS STEEL BANDING MATERIAL. TIGHTEN EACH BAND UNTIL IT STOPS MOVING THROUGH THE BUCKLE.
5. ATTACH FRAMED SIGNS TO POSTS WHEREVER THE FRAMES CROSS THE POSTS. AT EACH CROSSING, ATTACH THE SIGN USING TWO POST CLIPS ON W-SHAPE POSTS, A U-SHAPED BRACKET ON PIPES, AND A BRACKET WITH SQUARE CORNERS ON TUBES.
6. THE TUBE BRACKETS USED ON EVEN INCH SIZE TUBES MAY ALSO BE USED ON TUBES 1/2" SMALLER IN SIZE.
7. ONLY USE THE SPECIAL WINDBEAM BOLTS TO ATTACH SIGNS FRAMED WITH THE WINDBEAM FRAMING MATERIAL.
8. ATTACH FRAMED SIGNS TO POLES AND MAST ARMS USING POLE PLATES INSTALLED ACCORDING TO STANDARD DRAWING S-23.00
9. FOR ROUTE MARKER TREES, CUT PERFORATED TUBES TO ENSURE TIGHT FITTING JOINTS. ASSEMBLE THE PIECES WITH ACCESSORY ELL-SHAPED ANGLE BRACKETS.
10. INSTALL THE TOP EDGE OF SIGNS 1" ABOVE THE TOPS OF POSTS, EXCEPT FOR THE D3-1 STREET NAME SIGNS.
11. INSTALL THE TOP EDGE OF SIGNS 3" BELOW THE TOP OF POST, WHENEVER THEY ARE MOUNTED BELOW SIGNS SECURED BY POST TOP MOUNTING BRACKETS.
12. THE BRACKET DETAILS SHOWN INDICATE GENERAL DESIGNS ONLY. DESIGNS MAY VARY BY MANUFACTURER.
13. INSTALL WEATHER TIGHT CAPS ON ALL PIPE AND TUBE POSTS, EXCEPT PERFORATED TUBING.

FASTENER SPECIFICATION TABLE

FASTENERS		STEEL	STAINLESS STEEL
BOLTS		ASTM A 307	ASTM F 593
NUTS	REGULAR	ASTM A 563	ASTM F 594
	LOCK		
WASHERS		ASTM A 36	ASTM A 480
POST CLIPS			

STATE OF ALASKA
DEPARTMENT OF TRANSPORTATION AND PUBLIC FACILITIES

HOMER LAKE STREET REHABILITATION

SIGN ATTACHMENT DETAIL

STATE OF ALASKA 49TH CHRISTOPHER L. BENTZ CE 12821 REGISTERED PROFESSIONAL ENGINEER

DRAWING LOCATION
W:\Projects\Homer Lake Street Rehab - 52461\Civ3D12\Traffic\vjs_H29-30_SIGN-ATTACHMENT-DETAILS.dwg

DATE TIME 7/21/2015 5:32 PM | LAYOUT H2 | SCALE N/A | XREFS X_Border-Detail N/A | DESIGNED BY CMW/GSB | CHECKED BY CMW/GSB | DRAFTED BY MEF

LAST REVISION	
DATE	DESCRIPTION
03/04/2014	CENTRAL REGION DETAIL - THESE DETAILS SUPERSEDE ONLY THE LIGHT SIGN FRAMING DETAILS AND SIGN POST SPACING NOTE 2.b. ON STD. DWG. S-00.11, AND ENTIRELY REPLACES STD. DWG. S-01.00

STATE	PROJECT DESIGNATION	YEAR	SHEET NO.	TOTAL SHEETS
ALASKA	0001422/Z524610000	2017	H3	H7

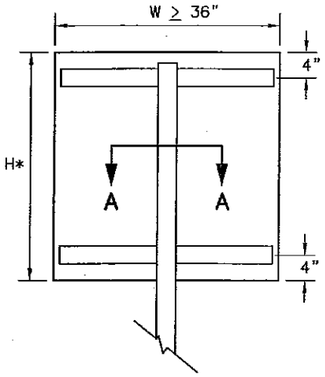

RECTANGLES AND TRAPEZOIDS

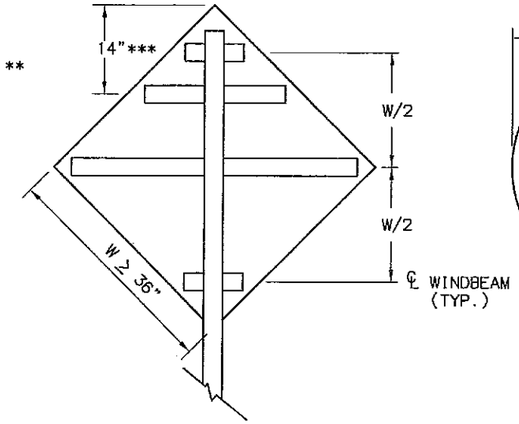

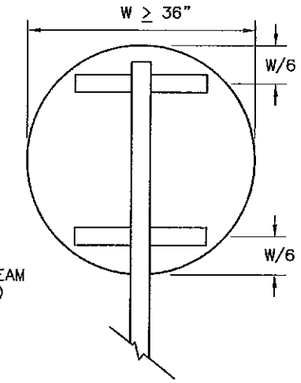

ROUNDS AND OCTAGONS

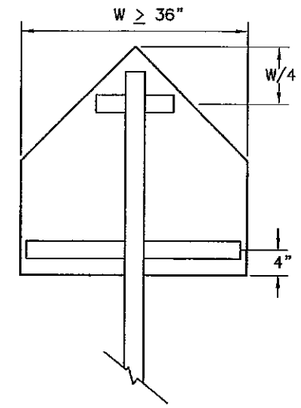

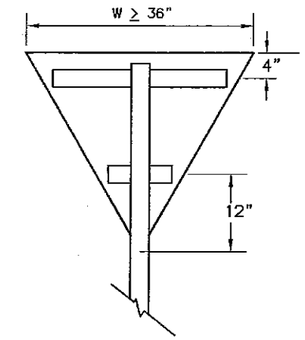

* WHEN H > 42 INCHES, INSTALL A 3RD WINDBEAM CENTERED ON THE SIGN.

** FOR S5-1 SIGNS MOUNTED ON FLASHING BEACON POSTS, USE A 10" OFFSET. OTHERWISE, USE 4".

*** FOR WARNING SIGNS MOUNTED ON FLASHING BEACON POSTS, USE THE 14" OFFSET. OTHERWISE, USE W/2.

WINDBEAM LOCATIONS FOR EACH SIGN SHAPE

ELEVATION VIEW

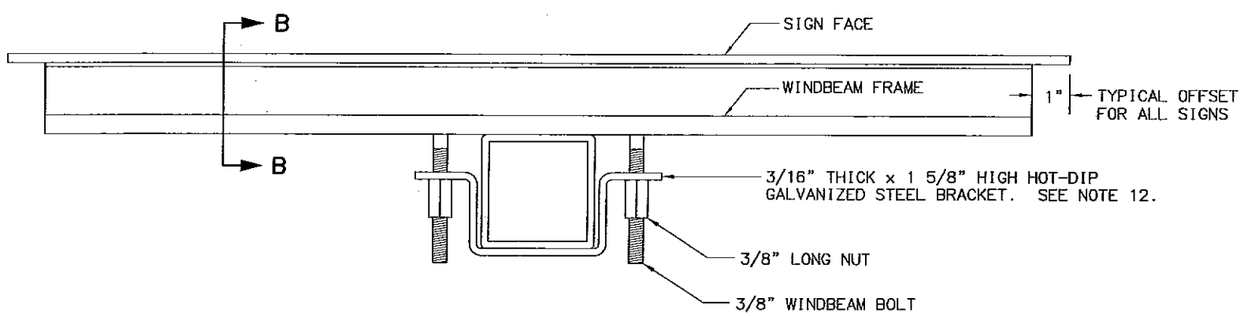

SECTION A - A TYPICAL SIGN ATTACHMENT DETAILS AT EACH WINDBEAM

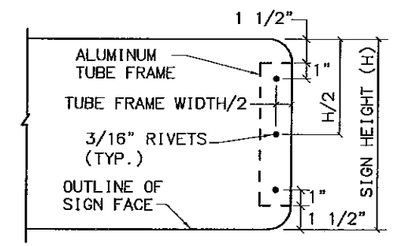

VIEW C - C

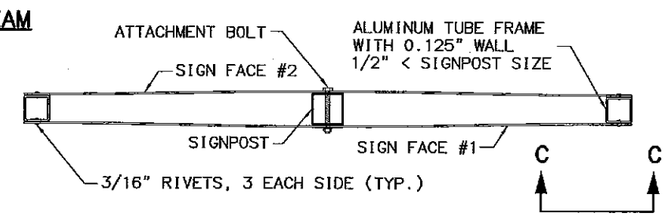

D3-1, D3-1A, D3-1D STREET NAME SIGN FRAMING DETAIL

PLAN VIEW

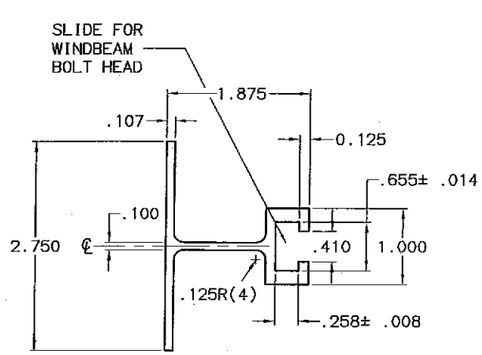

SECTION B - B WINDBEAM CROSS SECTION

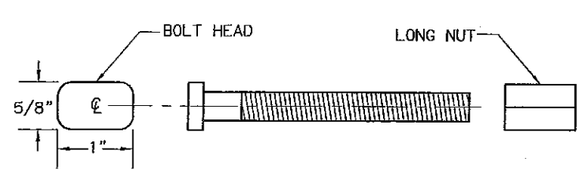

3/8" WINDBEAM BOLT AND LONG NUT

NOTES:

1. EXCEPT FOR POLES AND MAST ARMS, ONLY USE SQUARE STEEL TUBES TO SUPPORT SIGNS MOUNTED ON SINGLE POSTS.
2. INSTALL WINDBEAM OR ZEE SHAPED FRAMING MEMBERS ON DIAMOND SHAPED SIGNS 36 INCHES AND LONGER ON A SIDE AND ON OTHER SIGNS 36 INCHES WIDE AND WIDER.
3. IN HIGH WIND AREAS, THE PLANS MAY REQUIRE SIGNS SMALLER THAN THOSE LISTED IN NOTE 2 BE FRAMED AS SHOWN HEREON.
4. THIS DRAWING DEPICTS THE WINDBEAM FRAMING AND ATTACHMENT SYSTEM. ATTACH SIGNS FRAMED WITH ZEE SHAPED FRAMING ACCORDING TO REGIONAL DRAWING "SIGN ATTACHMENT DETAILS", USING "U" SHAPED BRACKETS AND TWO BOLTSWITH NUTS.
5. THE ENGINEER MAY APPROVE OTHER FRAMING MEMBERS. SUBMIT DOCUMENTS THAT DETAIL THE FRAME'S CROSS SECTION AND STRENGTH, AND METHOD OF ATTACHING THE FRAME TO A POST.
6. USE FRAMING MEMBERS MADE FROM ALUMINUM ALLOY 6061-T6.
7. EACH FRAMING MEMBER SHALL BE ONE CONTINUOUS PIECE.
8. ATTACH FRAMING MEMBERS TO THE SIGN PANELS WITH RIVETS OR AN ENGINEER APPROVED, DOUBLE SIDED, HIGH STRENGTH, ADHESIVE TAPE.
9. WITH THE ADHESIVE TAPE, INSTALL TWO RIVETS IN BOTH ENDS OF EACH FRAMING MEMBER, AND ATTACH THE FRAMING MEMBERS TO THE SIGN PANELS ACCORDING TO THE TAPE MANUFACTURER'S WRITTEN INSTRUCTIONS, INCLUDING:
   A. THE CLEANING AND HANDLING OF THE SIGN PANELS AND FRAMING MEMBERS.
   B. THE APPLICATION OF THE ADHESIVE TAPE.
10. WHEN RIVETS ARE USED TO ATTACH FRAMING MEMBERS, INSTALL 2 RIVETS IN EACH END AND THE BALANCE ON 8" MAXIMUM CENTERS.
11. USE 3/16" DIAMETER RIVETS CONFORMING TO ALUMINUM ALLOY 6061-T6 FOR COLD DRIVEN RIVETS, OR ALUMINUM ALLOY 6061-T43 FOR HOT DRIVEN RIVETS.
12. THE BRACKETS USED ON EVEN INCH SIZE TUBES MAY ALSO BE USED ON TUBES 1/2" SMALLER IN SIZE.
13. USE ONE 2.5" P.T. FOR ALL STOP SIGNS WITHIN THE MOA, AND ALL POSTS WITH A SINGLE SIGN PANEL THAT ARE 30" WIDE OR LESS. ALL OTHER STOP SIGN POSTS OUTSIDE THE MOA SHALL BE ON A 3" TUBE.

STATE OF ALASKA
DEPARTMENT OF TRANSPORTATION AND PUBLIC FACILITIES

HOMER LAKE STREET REHABILITATION

LIGHT SIGN FRAMING AND ATTACHMENT DETAILS

DRAWING LOCATION
W:\Projects\Homer Lake Street Rehab - 52461\Civ3D12\Traffic\vis_H29-30_SIGN-ATTACHMENT-DETAILS.dwg

DATE TIME 7/23/2015 11:01 AM | LAYOUT H3 | SCALE N/A | XREFS X_Bender-Detail N/A | DESIGNED BY CMW/GSB | CHECKED BY CMW/GSB | DRAFTED BY MEF

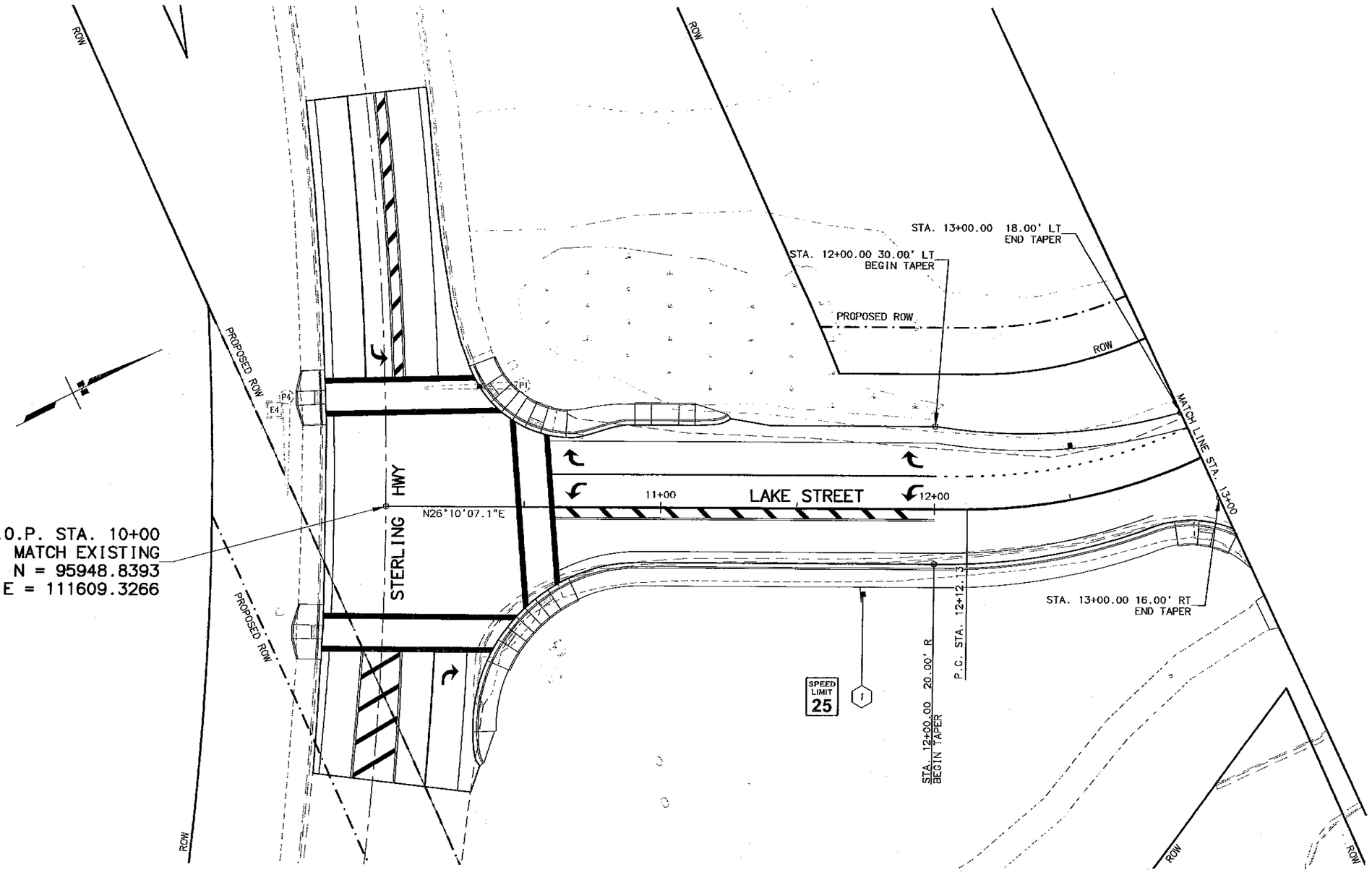

SHEET NO.	TOTAL SHEETS
H4	H7
STATE	YEAR
ALASKA	2017

PROJECT DESIGNATION

0001422/Z524610000

ADDENDUM NO.

ATTACHMENT NO.

REVISIONS

NO.	DATE	DESCRIPTION

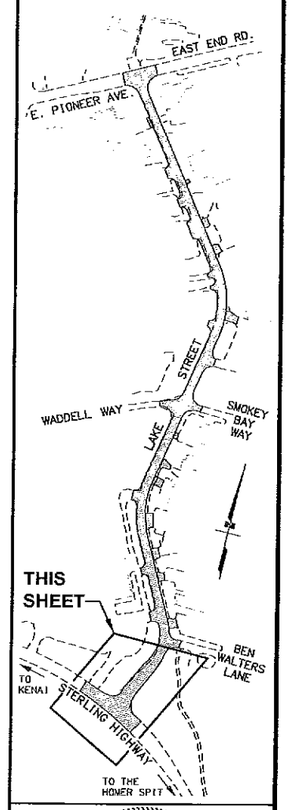

STATE OF ALASKA
49TH
CHRISTOPHER L. BENTZ
CE 12821
REGISTERED PROFESSIONAL ENGINEER

STATE OF ALASKA
DEPARTMENT OF TRANSPORTATION
AND PUBLIC FACILITIES

HOMER LAKE STREET
REHABILITATION

PLAN
STA 10+00 TO STA 13+00

REVIEW

DRAWING LOCATION
W:\Projects\Homer Lake Street Rehab - 52481\Civ3D12\Traffic\52481_H10_PlanPlan.dwg

DATE TIME
7/22/2015 10:16 AM

LAYOUT
H4

SCALE
1" = 20'

KRAFTS
52481 - BASIC DESIGN
52481 - Border-Plan08

DESIGNED BY AJH
CHECKED BY KEY
DRAFTED BY JMK/KJS

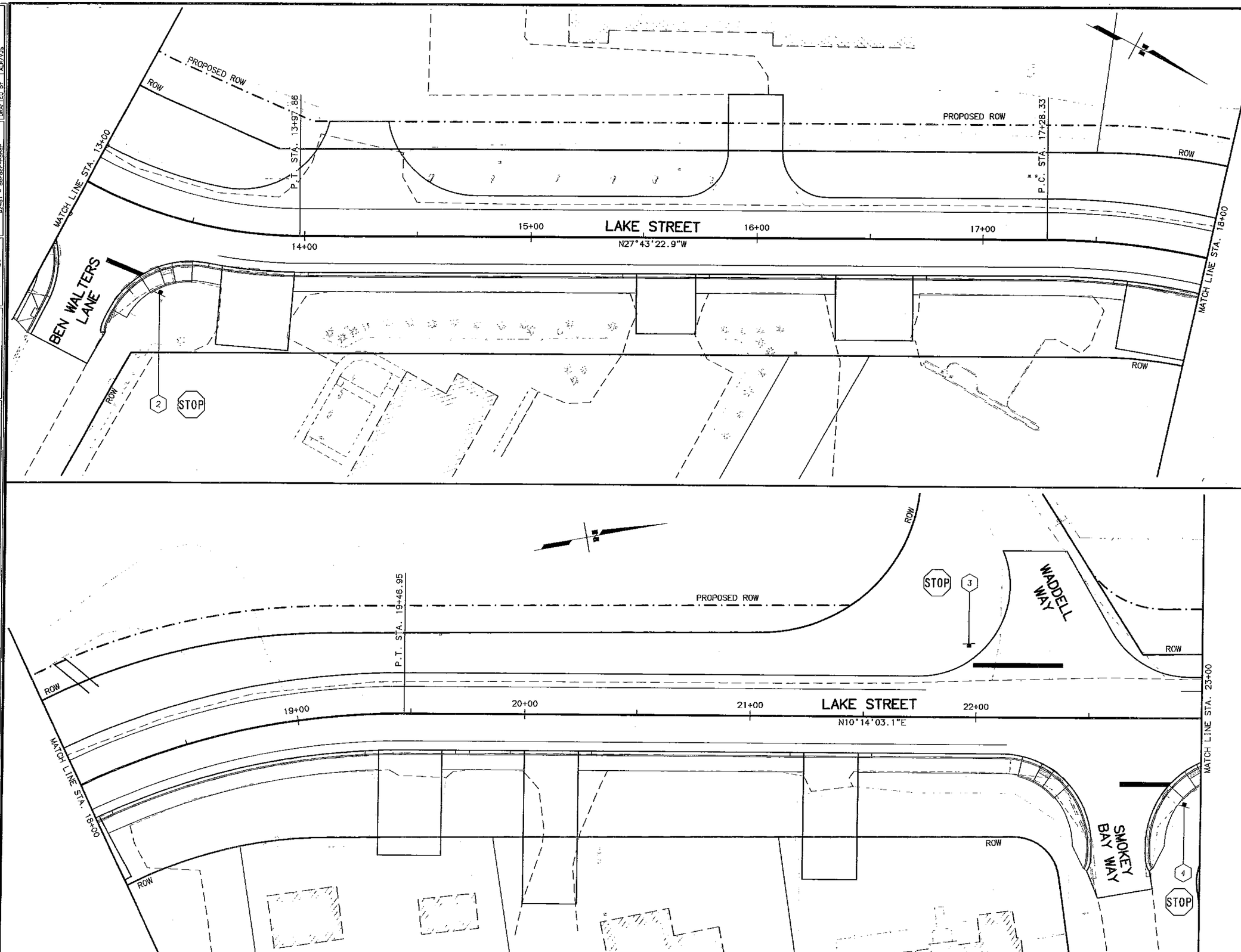

SHEET NO.	TOTAL SHEETS
H5	H7
STATE	YEAR
ALASKA	2017

PROJECT DESIGNATION

0001422/Z524610000

ADDENDUM NO.

ATTACHMENT NO.

REVISIONS

NO.	DATE	DESCRIPTION

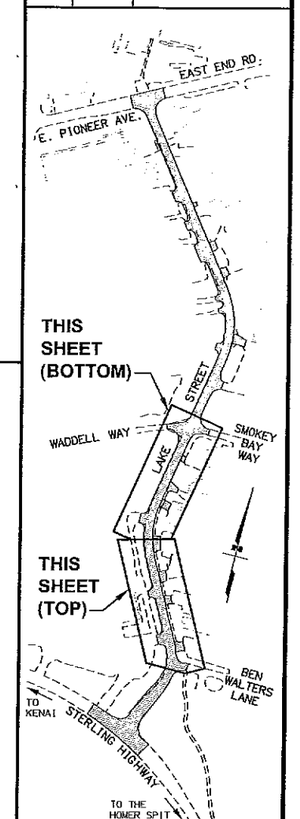

STATE OF ALASKA 49TH CHRISTOPHER L. BENTZ CE 12821 REGISTERED PROFESSIONAL ENGINEER

STATE OF ALASKA
DEPARTMENT OF TRANSPORTATION
AND PUBLIC FACILITIES

HOMER LAKE STREET
REHABILITATION

PLAN AND PROFILE
STA 13+00 TO STA 18+00
STA 18+00 TO STA 23+00

DRAWING LOCATION
W:\Projects\Homer Lake Street Rehab - 52461\Civ3D12\Traffic\52461_H10_Plan&Plan.dwg

DATE TIME
7/22/2015 10:16 AM

LAYOUT
H5

SCALE
1" = 20'

XREFS
52461 - Base DESIGN
52461 - Base-Alignment

DESIGNED BY AJH
CHECKED BY KBK
DRAWN BY AJH/JLS

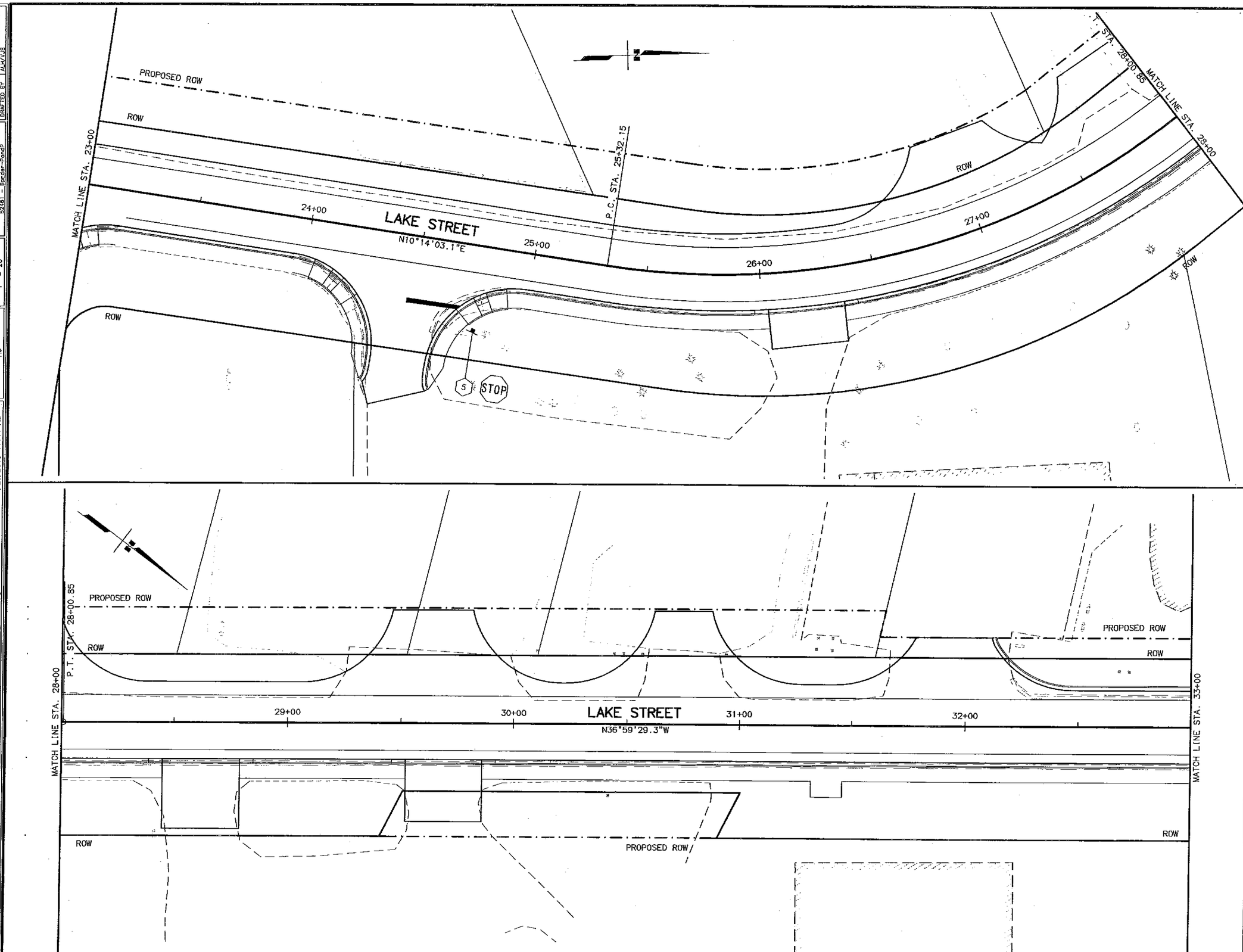

SHEET NO.	TOTAL SHEETS
H6	H7
STATE	YEAR
ALASKA	2017

PROJECT DESIGNATION
0001422/Z524610000

ADDENDUM NO.

ATTACHMENT NO.

REVISIONS

NO.	DATE	DESCRIPTION

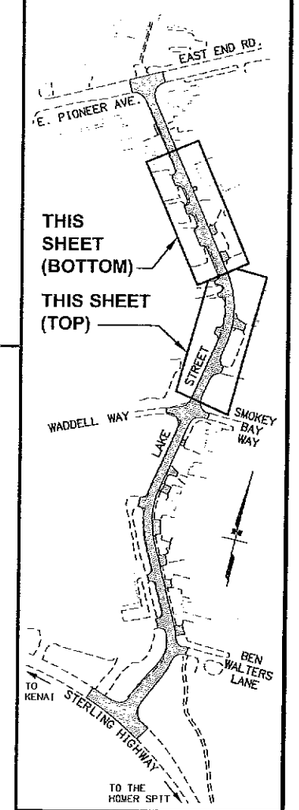

STATE OF ALASKA
49TH
CHRISTOPHER L. BENTZ
CE 12821
REGISTERED PROFESSIONAL ENGINEER

STATE OF ALASKA
DEPARTMENT OF TRANSPORTATION
AND PUBLIC FACILITIES

HOMER LAKE STREET
REHABILITATION

PLAN AND PROFILE
STA 23+00 TO STA 28+00
STA 28+00 TO STA 33+00

DRAWING LOCATION
W:\Projects\Homer Lake Street Rehab - 52461\Civ3D12\Traffic\52461_H10_Plan&Plan.dwg

DATE TIME
7/23/2015 11:11 AM

SCALE
1" = 20'

LAYOUT
H6

XREFS
52461 - DESIGN
52461 - Border-Sandp

DESIGNED BY ALH
DRAWN BY KEW
CHECKED BY ALH/KJS

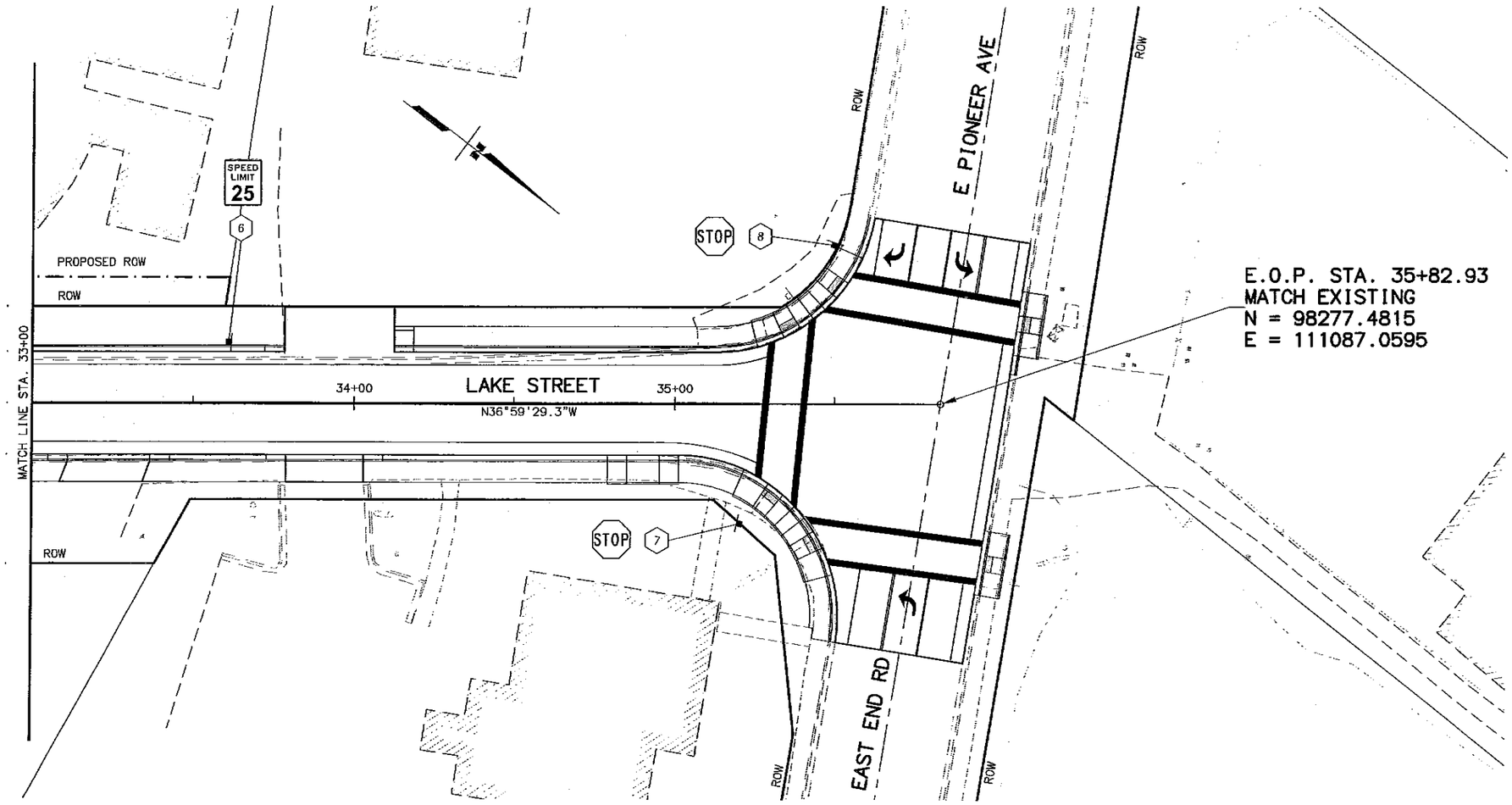

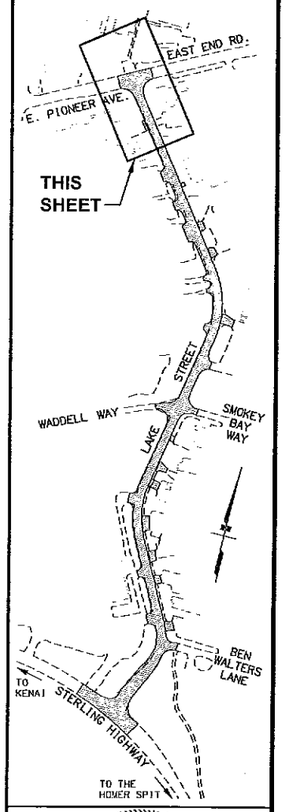

STATE OF ALASKA
49TH
CHRISTOPHER L. BENTZ
CE 12821
REGISTERED PROFESSIONAL ENGINEER

STATE OF ALASKA
DEPARTMENT OF TRANSPORTATION
AND PUBLIC FACILITIES

HOMER LAKE STREET
REHABILITATION

PLAN AND PROFILE
STA 33+00 TO E.O.P.

SHEET NO.	TOTAL SHEETS
H7	H7
STATE	YEAR
ALASKA	2017

PROJECT DESIGNATION
0001422/Z524610000

ADDENDUM NO.

ATTACHMENT NO.

REVISIONS

NO.	DATE	DESCRIPTION

DESIGNED BY ALH
CHECKED BY KRK
DRAWN BY ALH/KJS

XREFS
52461 - BASE - DESIGN
52461 - Proposed-Plan

SCALE 1" = 20'

LAYOUT H7

DATE TIME 7/23/2015 11:11 AM

DRAWING LOCATION
W:\Projects\Homer Lake Street Rehab - 52461\Civ3D12\Traffic\52461_H10_Plan&Plan.dwg

REVIEW