| REVISIONS | | |
|---|---|---|
| NO. | DATE | DESCRIPTION |
| 1 | 9/25/06 | REMOVED STANDARD DRAWING |
| 2 | 10/12/06 | ADDED STANDARD DRAWINGS |

| YEAR | STATE | PROJECT DESIGNATION | SHEET NO. | TOTAL SHEETS |
|---|---|---|---|---|
| 2005 | ALASKA | STP-0001(358)/57735 | A1 | 95 |
| ROUTE: 067000 | | MILEPOINT: 0.00 TO 13.56 | | |

**ADDENDUM NO. 3**
**ATTACHMENT NO. 1**

# STATE OF ALASKA
## DEPARTMENT OF TRANSPORTATION AND PUBLIC FACILITIES

PROPOSED HIGHWAY PROJECT

# KODIAK: PASAGSHAK ROAD SURFACING IMPROVEMENTS 2005
# STP-0001(358)/57735

GRADE RAISE, GRADING, DRAINAGE AND PAVING

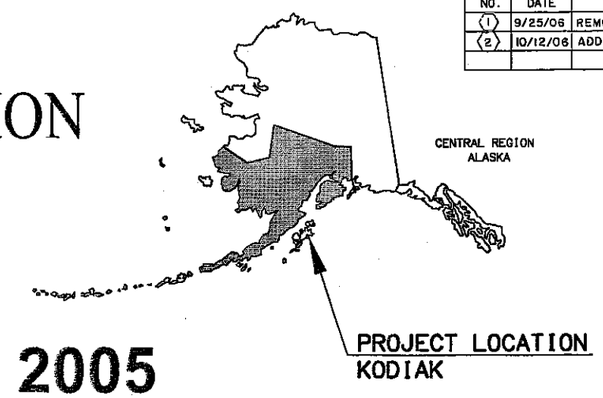


| INDEX | |
|---|---|
| SHEET NO. | DESCRIPTION |
| A1 - A4 | TITLE, LEGEND, LANDMARKS, SURVEY CONTROL |
| B1 - B6 | TYPICAL SECTIONS |
| C1 | ESTIMATE OF QUANTITIES |
| D1 - D15 | SUMMARY TABLES |
| E1 - E59 | DETAILS |
| H1 - H8 | TRAFFIC SIGNING |
| J1 - J2 | TRAFFIC CONTROL |

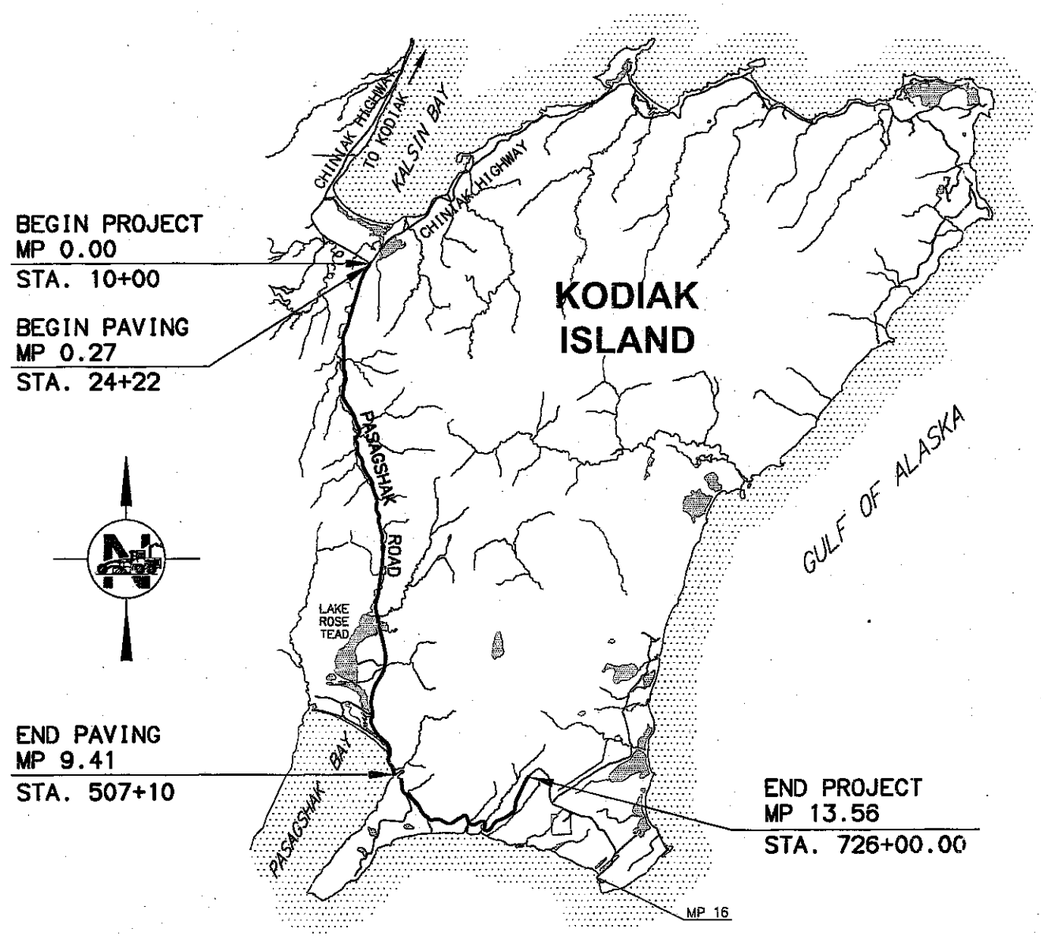


| PROJECT SUMMARY | | | | | | |
|---|---|---|---|---|---|---|
| ROUTE NAME | WIDTH (FT) | LENGTH (MI) | A.A.D.T. 2004 | V (mi/hr) | BEGIN | END |
| PASAGSHAK ROAD | 24/20 | 13.56 | 170 | 45 | CHINIAK/PASAGSHAK WYE | LAUNCH COMPLEX |
| | | | | | | |

As Advertised Central Region
September 6, 2006

THE FOLLOWING STANDARD DRAWINGS APPLY TO THIS PROJECT:

C-03.10, C-04.12, C-05.10
D-01.02, D-04.21, D-06.10,
D-07.00, (1) D-30.01
E-13.00
F-01.01
G-00.01, G-04.06S, G-04.07W,
G-10.01, G-20.10*, G-27.11,
G-28.00, G-46.10
(2) S-00.10, S-05.01, S-30.03, S-31.00
T-21.02

*USE 25:1 FLARE FOR ET-2000 END TERMINALS

STATE OF ALASKA
DEPARTMENT OF TRANSPORTATION & PUBLIC FACILITIES

STATE OF ALASKA 49TH JUDY D. DOUGHERTY CE 8823 REGISTERED PROFESSIONAL ENGINEER 9/31/6

STATE OF ALASKA 49TH THOMAS A. YOUNG CE 4228 REGISTERED PROFESSIONAL ENGINEER 9-5-06

APPROVED: 9.1.06
REGIONAL PRE-CONSTRUCTION ENGINEER DATE

CONCUR: 9/5/06
DIRECTOR, CONSTRUCTION & OPERATIONS DATE

CERTIFIED TRUE & CORRECT AS-BUILT OF ACTUAL FIELD CONDITION:

CONSTRUCTION PROJECT MANAGER DATE

DRAWING LOCATION T:\Projects\Land Projects 2004\57735 Pasag\dwg\Title_Pasag1.dwg DATE 08/16/2006 TIME 11:37:08 AM AST
LAYOUT A1 SCALE 1:1 XREFS NONE DESIGNED BY CHECKED BY DRAFTED BY PL/VS/DF

| STATE | PROJECT DESIGNATION | YEAR | SHEET NO. | TOTAL SHEETS |
|---|---|---|---|---|
| ALASKA | STP-0001(358)/57735 | 2005 | A2 | A4 |

| | RECOVERED | TO BE SET THIS PROJECT |
|---|---|---|
| GOV'T SECTION CORNER | 6 5 7 8 Sec. Cor. | |
| GOV'T 1/4 SECTION CORNER | 5 6 1/4 Cor. | |
| GOV'T 1/16 SECTION CORNER | 1/16 Cor. | |
| GOV'T SURVEY MONUMENT | | |
| GOV'T CONTROL STA. | | |
| PRIMARY MON. [BRASS/AL CAP] | | |
| SECONDARY CORNER | | |
| PRIMARY CENTERLINE MONUMENT | | |
| SECONDARY CENTERLINE MONUMENT | | |
| SURVEY CONTROL POINT | CP | |
| SECONDARY SURVEY CONT. POINT | SCP | |
| GPS CONTROL POINT | GPS | |
| BENCH MARK | BM | |
| TEMPORARY BENCH MARK | TBM | |
| ROCK MONUMENT | | |
| INTERNATIONAL BOUNDARY LINE | ALASKA / CANADA | |
| TOWNSHIP & RANGE LINE | T. 13 N. / T. 12 N. — R. 2 W. / R. 3 W. | |
| SECTION LINE | | |
| 1/4 SECTION LINE | | |
| 1/16 SECTION LINE | | |
| CORPORATE or CITY LIMITS | | |
| EXISTING RIGHT-OF-WAY | | |
| RIGHT-OF-WAY REQUIRED | | |
| PROJECT RIGHT-OF-WAY LINE | ROW | |
| EXISTING PROPERTY LINE | | |
| CONTROLLED ACCESS LINE | C/A | |
| PERMIT LINE | | |
| EXISTING EASEMENT LINE | | |
| STATION EQUATION | STA. 14+33.22 BK. = STA. 16+90.17 AHD. | |
| PROJECT CENTERLINE | 27+00 | |
| EXISTING CENTERLINE | | |
| RAILROAD CENTERLINE | | |
| HIGHWAY MILEPOST | 6.5 — 23+12.56 | |
| RAILROAD MILEPOST | R.R. 2580+60 / HWY. 126+33 — 842 | |

| | |
|---|---|
| ROADWAY OBLITERATION | |
| LIMIT OF CUT SLOPE | |
| LIMIT OF FILL SLOPE | |
| PROPOSED ROADWAY | |
| EXISTING ROADWAY | |
| NOISE BARRIER | |
| FENCE | |
| STONE FENCE | |
| HEAD & WINGWALLS | |
| GUARD RAIL EXISTING | |
| PROPOSED | |
| RETAINING WALL | |
| TUNNEL | |
| INTERMITTENT DRAINAGE | |
| INTERCEPTOR DITCH | |
| MARSHLAND | |
| CREEK | |
| RIVER | |
| LAKE | LAKE |
| RESERVOIR | RES. |
| CHANNEL CHANGE | |
| PLANTER | P |
| VENT | |
| TANK VENT | |
| WELL | W |
| SEPTIC | S |
| TANKS | |
| Above Ground | |
| Below Ground | |
| SATELLITE DISH | |
| PRIVATE SIGN | |
| GAS PUMP | GP |
| POST | |
| BOULDER OR BOULDERS | |
| LANDSCAPE LIGHT | |
| DECIDUOUS TREE | |
| CONIFER TREE | |
| SHRUB OR SHRUBS | |

| PIPELINES: (BELLS INDICATE DIRECTION OF FLOW) | EXISTING | PROPOSED |
|---|---|---|
| SANITARY SEWER | SS | SS |
| OIL | O | O |
| GAS | G | G |
| WATER | W | W |
| STORM DRAIN | SD | SD |
| SIDEWALK | | |
| CONCRETE CURB | | |
| CONCRETE CURB & GUTTER | | |
| DRIVEWAY, APPROACH, & SIDEDRAIN | | |
| BRIDGE | | |
| RIPRAP | | |

| | | EXISTING |
|---|---|---|
| TELEPHONE | (OVERHEAD) | OT |
| | (DIRECT BURY) | UT |
| ELECTRIC | (OVERHEAD) | OE |
| | (DIRECT BURY) | UE |
| FIBER OPTIC | | FO |
| CABLE TV | (OVERHEAD) | O TV |
| | (DIRECT BURY) | U TV |
| U.G. DUCT | | |
| TELEPHONE MANHOLE | | |
| ELECTRIC MANHOLE | | |
| FOUNDATION | | |
| BUILDING | | |

| | EXISTING | PROPOSED |
|---|---|---|
| MANHOLE | M.H. | M.H. |
| FIRE HYDRANT | | |
| METER | | |
| VALVE | | |
| PIPE CULVERT w/ END SECT. | | |
| UTILITY POLE | | |
| ELECTROLIER | | |
| UTILITY POLE WITH LUMINAIRE | | |
| POLE ANCHOR /w GUY | | |
| TRANSMISSION TOWER [WOOD] | | |
| TRANSMISSION TOWER [STEEL] | | |
| ELECTRICAL OUTLET | | |
| ELECTRICAL PEDESTAL | | |
| TELEPHONE PEDESTAL | | |
| CABLE T.V. PEDESTAL | | |

| | EXISTING | PROPOSED |
|---|---|---|
| MAILBOX | | MB |
| SIGN (FACING →) | | |
| DELINEATOR (FACING →) | | |
| PVC CONDUIT | PVC | PVC |
| RMC CONDUIT | RMC | RMC |
| SIGNAL FACE, VEHICULAR | | |
| SIGNAL FACE, LEFT TURN, | | |
| SIGNAL FACE, PEDESTRIAN | | |
| JUNCTION BOX, TYPE IA | X | X |
| JUNCTION BOX, TYPE II | X | X |
| JUNCTION BOX, TYPE III | X | X |
| DETECTOR, LOOP | X | X |
| DETECTOR, OPTICOM | | |
| PEDESTRIAN PUSH BUTTON (DIRECTION →) | X | X |
| SIGNAL CONTROLLER | | |
| LOAD CENTER | | |
| SIGNAL POLE | X | X |
| SIGNAL POLE w/MASTARM | X | X |
| SOLID WHITE STRIPE | W | |
| SOLID YELLOW STRIPE | Y | |
| BROKEN WHITE or YELLOW STRIPE | W | Y |
| DASH YELLOW STRIPE | Y | |
| SOLID YELLOW STRIPE with BROKEN YELLOW STRIPE | Y | |

X = ACTUAL NUMBER

STATE OF ALASKA
WOLFGANG E. JUNGE
CE 8735
REGISTERED PROFESSIONAL ENGINEER

STATE OF ALASKA
DEPARTMENT OF TRANSPORTATION
AND
PUBLIC FACILITIES

KODIAK: PASAGSHAK ROAD
SURFACING IMPROVEMENTS 2005

LEGEND SHEET

PLOT CTB: PLOT SCALE:
DESIGNED BY CHECKED BY DRAFTED BY
SCALE 1:1 COMPUTER DESIGNATION

| REVISIONS | | | STATE | PROJECT DESIGNATION | YEAR | SHEET NO. | TOTAL SHEETS |
|---|---|---|---|---|---|---|---|
| No. | DATE | DESCRIPTION | ALASKA | STP-0001(358)/57735 | 2005 | A3 | A4 |
| | | | | | | | |
| | | | | | | | |

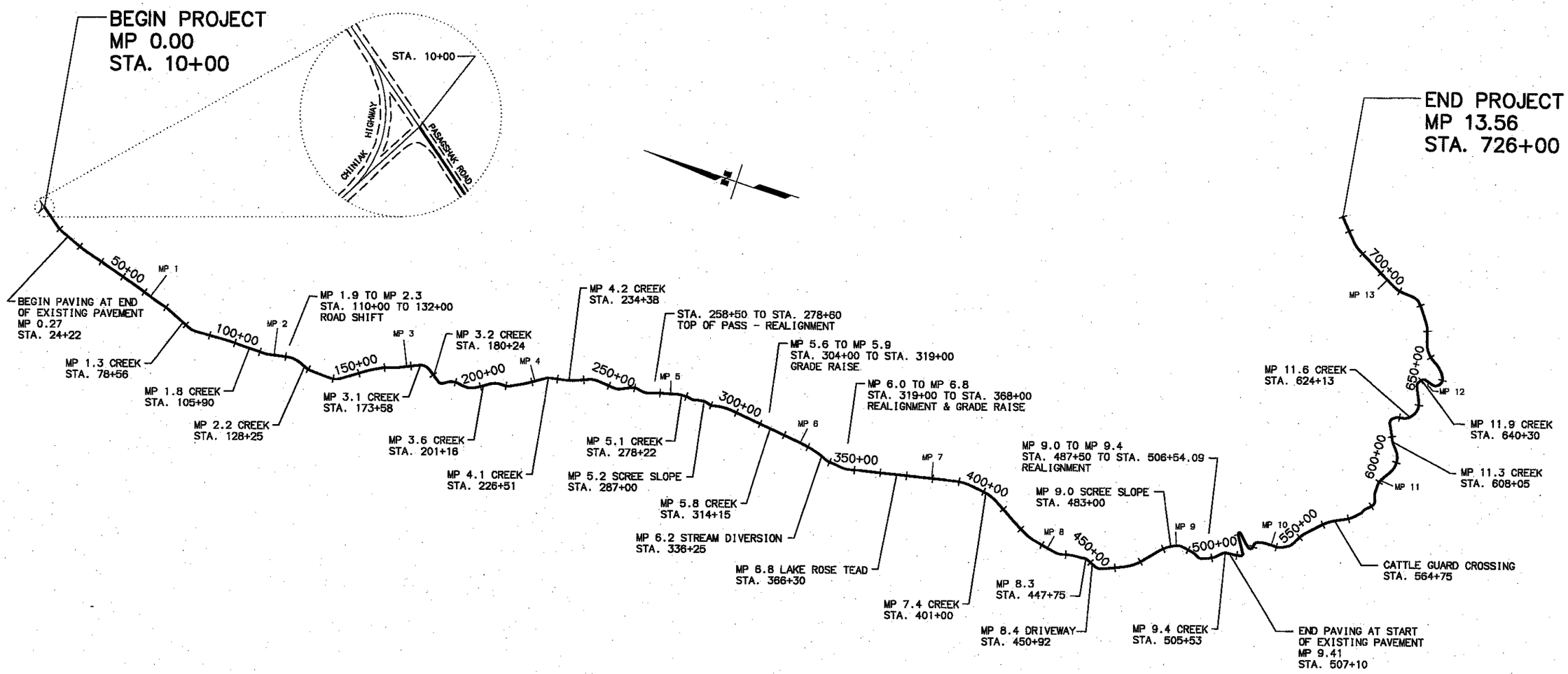


| DRAWING LOCATION | DATE | TIME | LAYOUT | SCALE | XREFS | DESIGNED BY | CHECKED BY | DRAFTED BY |
|---|---|---|---|---|---|---|---|---|
| T:\pattel\Land Projects 2004\57735 Pasag\dwg\Landmark_Pasag.dwg | 08/15/2006 | 2:16:08 PM AST | | | NONE | | | PL/VS |

STATE OF ALASKA
49TH
THOMAS A. YOUNG
CE 4228
8-22-06
REGISTERED PROFESSIONAL ENGINEER

STATE OF ALASKA
DEPARTMENT OF TRANSPORTATION
AND
PUBLIC FACILITIES

# KODIAK: PASAGSHAK ROAD SURFACING IMPROVEMENTS 2005

## LANDMARK LOCATIONS

| PROJECT DESIGNATION | SHEET NO. | TOTAL SHEETS |
|---|---|---|
| STP-0001(358) AKSAS 57735 | A4 | A4 |

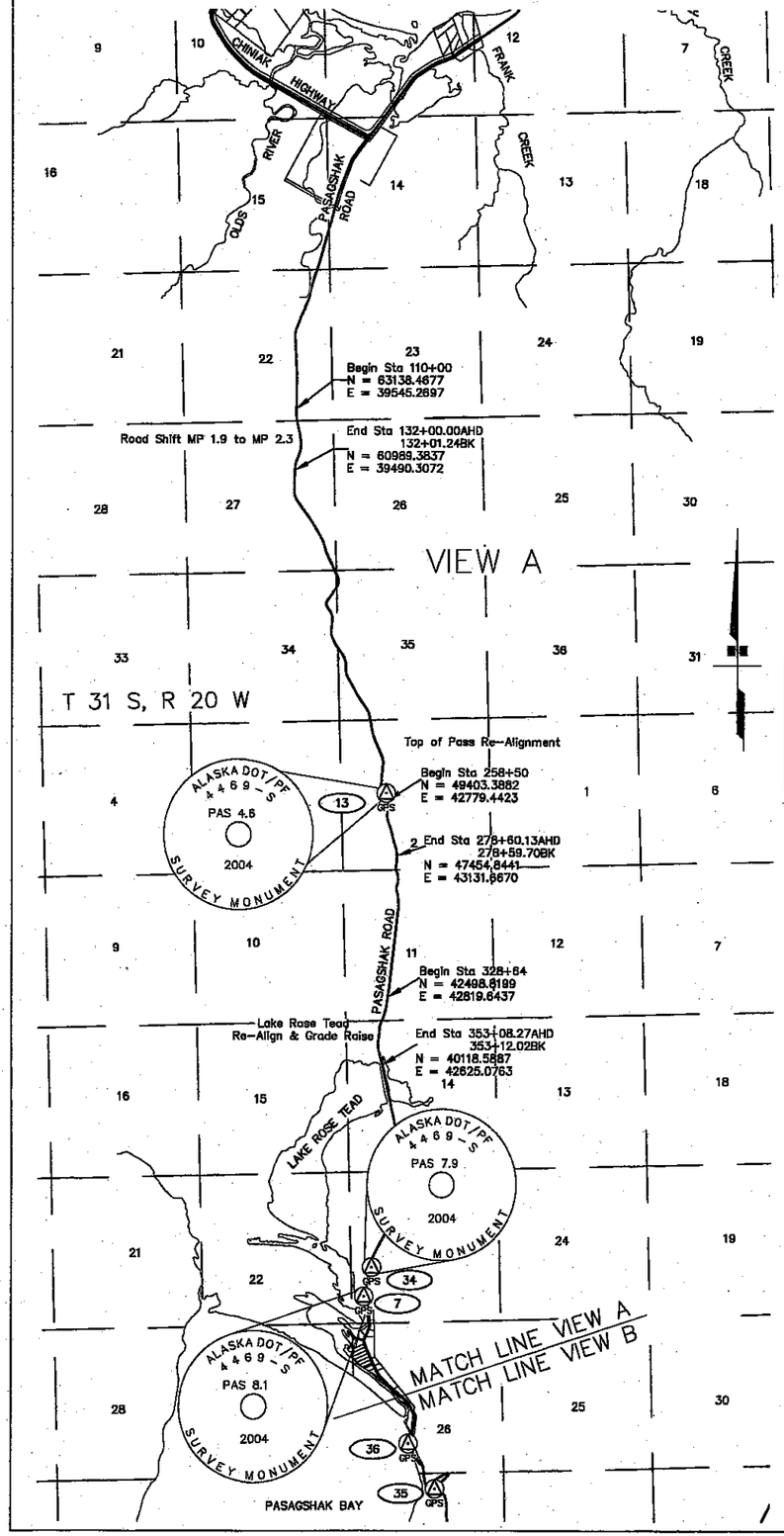


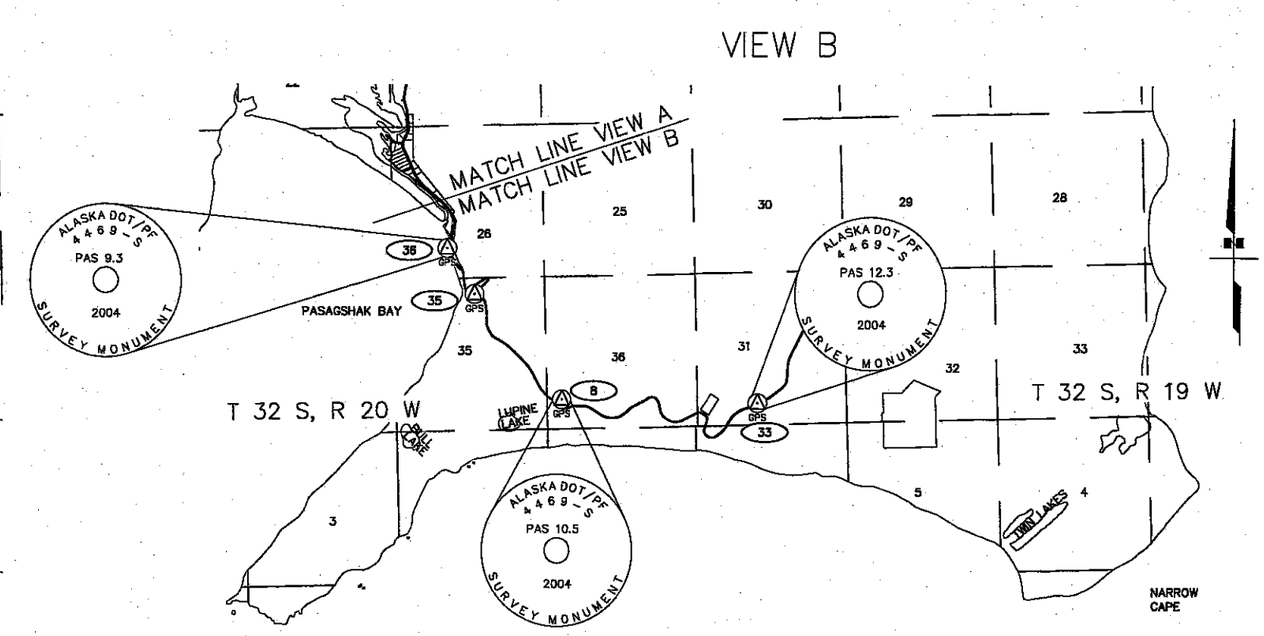


| POINT NO. | LATITUDE | LONGITUDE | NORTHING | EASTING | ELLIPS. HT. | ELEV. | DESCRIPTION (ALL MONUMENTS ARE SET THIS SURVEY) |
|---|---|---|---|---|---|---|---|
| 7 | N 57°28'13.38604" | W 152°27'30.12967" | 32030.6740 | 41991.7690 | 50.0360 | 3.793 | PAS 8.1 (5/8" REBAR LOCATED APPROX. 11.5' FROM PP# 127 AND LYING 50' FROM WESTERLY EDGE OF PASAGSHAK ROAD) |
| 8 | N 57°28'30.22700" | W 152°25'52.00590" | 21888.1340 | 47597.7920 | 328.5295 | 282.13 | PAS 10.5 – AT MP 10.76 (BRASS CAP ON DRIVE ROD LOCATED ON A HILL APPROX. 325' NORTH OF THE ROAD SHOULDER AND 82' WEST OF A BARBED WIRE FENCE) |
| 13 | N 57°31'06.77406" | W 152°27'08.92179" | 49652.6170 | 42750.3090 | 470.6093 | 424.678 | PAS 4.6 (BRASS CAP LOCATED ON EASTERLY SIDE OF THE ROAD ACROSS FROM PP#74) |
| 33 | N 57°26'27.55798" | W 152°23'46.77358" | 21577.2400 | 54455.9100 | 204.3782 | 157.979 | PAS 12.3 – AT MP 12.5 (BRASS CAP ON DRIVE ROD 40' NORTH OF ROAD SHOULDER AND 154' FROM WEATHER STATION POLE) |
| 34 | N 57°28'23.39572" | W 152°27'24.65959" | 33055.1640 | 42267.7010 | 71.6403 | 25.401 | PAS 7.9 (BRASS CAP LOCATED APPROX. 380' SOUTH OF DRIVEWAY AND ACROSS FROM PP #124 ON EAST SIDE OF THE ROAD) |
| 35 | N 57°27'08.73655" | W 152°26'46.47524" | 25324.2370 | 44532.9450 | 216.5383 | 170.201 | PAS 9.9 (ALUMINUM CAP ON 5/8" REBAR LOCATED AT THE TOP OF THE ROAD SWITCH BACKS AND LYING 8' WEST OF NORTH END OF GUARD RAIL) |
| 36 | N 57°27'22.52059" | W 152°27'03.19275" | 26904.9450 | 43582.0300 | 60.8168 | 14.506 | PAS 9.3 – AT MP 9.2 (BRASS CAP ON DRIVE ROD APPROX. 190' NORTH OF PLASTIC CULVERT AND LYING 35' WEST OF PASAGSHAK ROAD CENTERLINE) |

NOTES:

1. THE ORIGINAL SURVEY FOR THIS PROJECT WAS DONE IN STATE PLANE COORDINATE SYSTEM, ZONE 5, U.S. SURVEY FEET, NAD 83 (2002). A LOCAL GRID WAS ADOPTED BY TAKING THE STATE PLANE COORDINATE IN FEET AND TRANSLATING THE NORTHING BY – 1,238,937.1390, THE EASTING BY –1,901,866.2400. THE SCALE FACTOR WAS NEARLY ONE AND NO SCALE FACTOR IS USED BETWEEN THE TWO SYSTEMS. THE RESULTING LOCAL SYSTEM IS ON STATE PLANE BEARINGS WITH GROUND DISTANCES. THE POINT SELECTED FOR TRANSLATION BETWEEN THE TWO SYSTEMS IS CHIN 32.4.

2. THE GEOGRAPHIC POSITIONS OF THE MAIN THREE CONTROL POINTS, CHIN 15.4, CHIN 41.6, PAS 10.5A WERE DETERMINED BY 5 HOUR MINIMUM SESSIONS REPEATED ON TWO OR MORE ADDITIONAL DAYS, AND PROCESSED BY NGS OPUS. THOSE THREE POINTS WERE HELD AND THE NETWORK WAS DENSIFIED WITH STATIC OBSERVATIONS AND PROCESSED IN GEOGENIUS 2000 SOFTWARE, WITH DATA GATHERED USING JAVAD (NOW TOPCON) DUAL FREQUENCY PLUS GLONASS LEGACY AND LEGACY E RECEIVERS.

3. THE EXISTING ROAD LOCATION SURVEY WAS PERFORMED BY POST PROCESSED KINEMATIC METHODS AND TRADITIONAL TOTAL STATIONS.

4. THE POINT NAMING CONVENTION USES THE ROAD NAME (CHIN FOR CHINIAK, PAS FOR PASAGSHAK) AND THE APPROXIMATE MILEPOST.

5. ELEVATION DATUM IS A "PSEUDO" NAVD 88 AS DETERMINED BY GPS OBSERVATIONS USING GEOID 99, AND WERE BASED ON SOLUTIONS PROCESSED BY THE NGS OPUS UTILITY.

NOTE:

1. THE INFORMATION SHOWN IS BASED ON RECORD OF SURVEY 2005–11, KODIAK RECORDING DISTRICT, COMPLETED BY MULLIKIN SURVEYS FOR AK DOT.

Surveyor's Certificate

I hereby certify that I am properly Registered and Licensed to practice Land Surveying in the State of Alaska, and that this drawing was prepared under my direct supervision, and that the monuments shown hereon actually exist as described, and that all dimensions and other details are correct to the extent shown hereon.

Michael E. Miller 6/22/06
Michael E. Miller LS-7222 6/22/2006

STATE OF ALASKA 49TH Michael E. Miller LS-7222 6/22/06 REGISTERED PROFESSIONAL LAND SURVEYOR

2640 0 2640 5280 7920 10560 13200
U.S. SURVEY FEET

| LEGEND |
|---|
| GPS CONTROL STATION |
| SURVEY POINT NUMBER |

STATE OF ALASKA
DEPARTMENT OF TRANSPORTATION
&
PUBLIC FACILITIES
SURVEY CONTROL SHEET

KODIAK: PASAGSHAK ROAD
SURFACING IMPROVEMENTS 2005

STP-0001(358) / 57735

LOCATED IN SEC. 22 & 27 T31S R20W, SEC. 2, 11, 14 T32S R20W, S.M. ALASKA

| | | | |
|---|---|---|---|
| DRAWN | RMK | DATE 06/22/06 | SCALE 1"=2640' |
| CHECKED | MEM | DATE 06/22/06 | SHEET 1 OF 1 |

| REVISIONS | | | STATE | PROJECT DESIGNATION | YEAR | SHEET NO. | TOTAL SHEETS |
|---|---|---|---|---|---|---|---|
| No. | DATE | DESCRIPTION | | | | | |
| 1 | 9/22/06 | REVISED NOTE 7 AND NOTE 14 | ALASKA | STP-0001(358)/57735 | 2005 | B1 | B6 |
| 2 | 9/26/06 | DELETED NOTE 13 | | | | | |
| 3 | 9/26/06 | CHANGED NOTE 15 | | | | | |
| 4 | 9/26/06 | CHANGED STATION LIMITS | | | | | |
| 5 | 10/19/06 | CHANGED NOTE 11 | | | | | |
| 6 | 10/26/06 | ADDED TYPICAL SECTION NOTE | | | | | |

ADDENDUM NO. 3
ATTACHMENT NO. 1

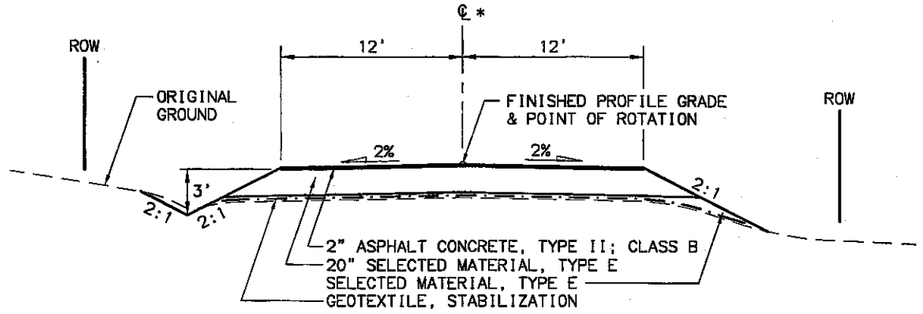


## PASAGSHAK ROAD

*,** STA. 24+22 TO STA. 258+50
STA. 278+60 TO STA. 304+00
*** STA. 368+00 TO STA. 487+50 (4)

* SEE GENERAL NOTE 10.
** STA. 110+00 TO STA. 132+00 SHIFT ROAD RIGHT OF EXISTING CENTERLINE PER DETAIL SHEET E9.
(6) *** SEE GENERAL NOTE 7. SHIFT ROAD CENTERLINE BETWEEN STATION 442+70 AND STATION 486+00 AS DIRECTED BY THE ENGINEER TO STAY WITHIN THE EXISTING RIGHT-OF-WAY.

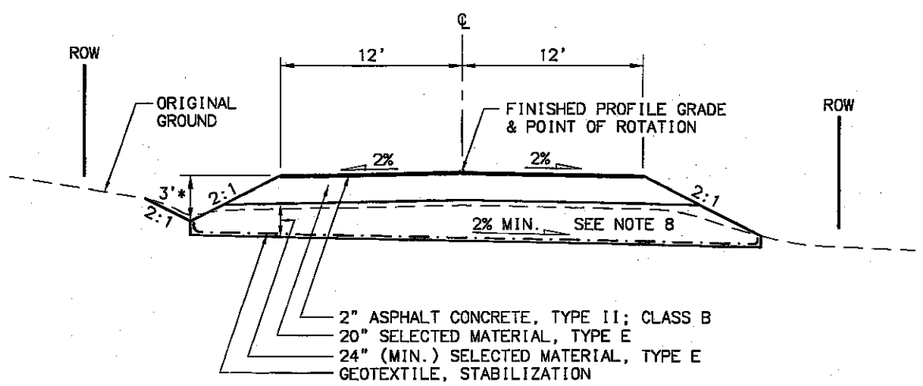


## DIGOUT

| | |
|---|---|
| STA. 93+40 TO STA. 95+00 | STA. 205+95 TO STA. 208+95 |
| STA. 117+20 TO STA. 117+75 | STA. 229+35 TO STA. 232+05 |
| STA. 132+10 TO STA. 132+70 | STA. 436+55 TO STA. 437+55 |
| STA. 136+10 TO STA. 136+70 | STA. 469+50 TO STA. 471+50 |
| STA. 193+95 TO STA. 198+00 | |

* STA. 469+50 TO STA. 471+50, 3.5'

## GENERAL NOTES:

1. EXCEPT IN REALIGNED PORTIONS OF THE PROJECT, THE STATIONING SHOWN FOR THE PROJECT IS BASED ON THE APPROXIMATE CENTERLINE OF THE EXISTING ROAD. PROJECT FEATURES WERE LOCATED ALONG THE ROAD USING HAND-HELD GPS (GARMIN, MODEL GPSmap76s); THEREFORE, STATIONING, NORTHINGS, AND WESTINGS PROVIDED IN THESE PLANS ARE APPROXIMATE AND ARE INTEDED ONLY TO PROVIDE GENERAL GUIDANCE IN LOCATING PROJECT FEATURES. SPECIFIC INSTALLATIONS WILL REQUIRE FIELD ADJUSTMENT AS DIRECTED BY THE ENGINEER.

2. UNLESS INDICATED OTHERWISE IN THESE PLANS OR AS DIRECTED BY THE ENGINEER, THE HORIZONTAL ALIGNMENT IS THE APPROXIMATE CENTERLINE OF THE EXISTING ROAD. HORIZONTAL AND VERTICAL CONTROL FOR REALIGNED PORTIONS OF THE PROJECT IS PROVIDED ON THE SURVEY CONTROL SHEET.

3. PROVIDE SUPERELEVATION ON CURVES AS DIRECTED BY THE ENGINEER. MAXIMUM SUPERELEVATION RATE SHALL BE 6%.

4. WIDEN THE PAVEMENT ON THE INSIDE OF CURVES 1 FOOT AS DIRECTED BY THE ENGINEER. USE 50:1 TAPER BEFORE PC AND AFTER PT.

5. WHEN MATCHING INTO EXISTING PAVEMENT WITH NEW PAVEMENT, THE EXISTING PAVEMENT WILL BE SAW CUT BACK 5 FEET TO PROVIDE A VERTICAL JOINT.

6. THE CONTRACTOR SHALL PLACE SEEDING ON ALL NEW CUT SOIL SLOPES AND AREAS DISTURBED BY CONSTRUCTION ACTIVITIES, OR AS DIRECTED BY THE ENGINEER. SEED SHALL NOT BE PLACED ON SELECTED MATERIAL, TYPE E EMBANKMENT.

(1) 7. ALL CONSTRUCTION ACTIVITIES SHALL BE DONE WITHIN THE RIGHT-OF-WAY, TCE, PME, AND EASEMENT LIMITS. EXCEPT WHERE NOTED OTHERWISE, RIGHT-OF-WAY IS 50' FROM CENTER OF THE EXISTING ROADWAY. RIGHT-OF-WAY NARROWS TO 60' TOTAL WIDTH FROM APPROXIMATE STA. 442+70 TO STA. 486+00.

8. GRADE DIGOUT BOTTOM AT 2% (MIN.) CROSS SLOPE TO MATCH NATURAL SURROUNDING DRAINAGE.

9. STATION OF DIGOUT INCLUDES THE 5:1 TAPER RATE TO THE DEPTH OF DIGOUT SECTION.

10. TAPER FROM EXISTING PAVEMENT AT STATION 24+22 TO FULL TYPICAL SECTION DEPTH AT A 50:1. SEE DETAIL SHEET E2.

(5) 11. CLEARING AND GRUBBING SHALL OCCUR WHEREVER THERE IS EARTH WORK OR AS DIRECTED BY THE ENGINEER. THE CLEARING AND GRUBBING LIMIT SHALL EXTEND 2 FEET BEYOND FILL OR CUT SLOPE EXCEPT, IN WETLAND AREAS, NO CLEARING, GRUBBING OR SOIL DISTURBANCE IS AUTHORIZED BEYOND THE SLOPE LIMITS UNLESS OTHERWISE SHOWN IN THE PLANS.

12. WHEN GUARDRAIL IS INSTALLED, THE PAVED LANE WIDTH SHALL BE WIDENED TO 13'. SEE SHEET B6 WIDENING FOR GUARDRAIL.

(2) 13.

(1) 14. SELECTED MATERIAL, TYPE E WITHIN 20 INCHES OF THE TOP OF EMBANKMENT SHALL HAVE AT LEAST 98% BY WEIGHT OF THE PARTICLES PASSING THE 3 INCH SIEVE.

(3) 15. MILE LOCATIONS NOTED ON THESE PLANS ARE BASED ON EXISTING ROADWAY STATIONING AND MAY NOT CORRESPOND TO THE LOCATIONS OF EXISTING MILEPOST SIGNS.

STATE OF ALASKA 49TH THOMAS A. YOUNG CE 4228 10-26-06 REGISTERED PROFESSIONAL ENGINEER

STATE OF ALASKA
DEPARTMENT OF TRANSPORTATION
AND
PUBLIC FACILITIES

KODIAK: PASAGSHAK ROAD
SURFACING IMPROVEMENTS 2005

TYPICAL SECTIONS

DRAWING LOCATION: T:\pat#\Land Projects 2004\57735 Pasag\dwg\Typ_Pasag.dwg
DATE: 10/20/2006 TIME: 6:07:19 PM AST
LAYOUT: B1
SCALE: 1:5
XREF'S: NONE
DESIGNED BY: MJW, MW
CHECKED BY:
DRAFTED BY: PL/VS

| REVISIONS | | |
|---|---|---|
| No. | DATE | DESCRIPTION |
| 1 | 10/4/06 | ADDED FLUFF BLASTING |
| 2 | 10/4/06 | ADDED NEW TYPICAL SECTION |
| 3 | 10/4/06 | MODIFIED STA. AND NOTES |
| 4 | 10/4/06 | REPLACED SHEET |

| STATE | PROJECT DESIGNATION | YEAR | SHEET NO. | TOTAL SHEETS |
|---|---|---|---|---|
| ALASKA | STP-0001(358)/57735 | 2005 | B2 | B6 |

ADDENDUM NO. 2
ATTACHMENT NO.1 (4)

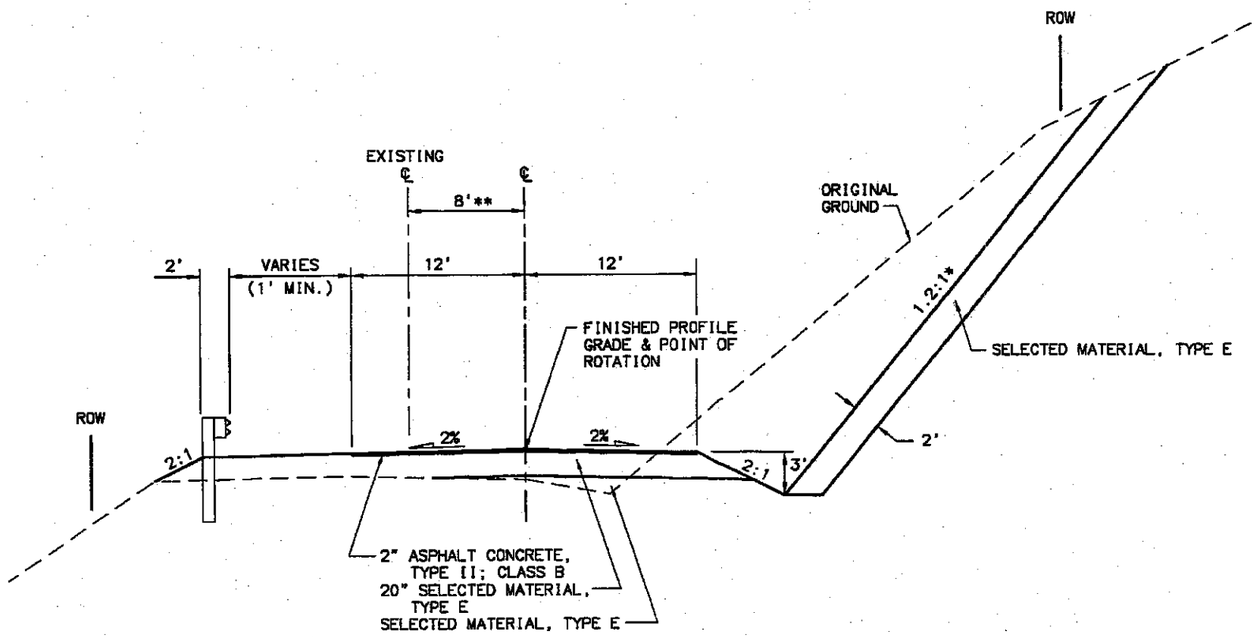


## (2) TOP OF PASS - REALIGNMENT

STA. 258+50 TO STA. 270+17
STA. 272+50 TO STA. 278+60
* SEE NOTE 1
** SEE NOTE 3

## (3) NOTES:

1. WHEN 1.2:1 SLOPE CAN NOT CATCH WITHIN WORK ZONE, STEEPEN CUT SLOPE AND CONSTRUCT USING SLOPE STAILIZATION PER SPECIAL PROVISIONS 203.
2. THE WORK ZONE BETWEEN STATIONS 258+50 AND 278+60 IS 150 FEET IN WIDTH TO THE RIGHT OF THE EXISTING ROADWAY CENTERLINE.
3. TRANSITION LENGTH TO SHIFT EXISTING CENTERLINE WILL BE 400' OR AS DIRECTED BY THE ENGINEER.

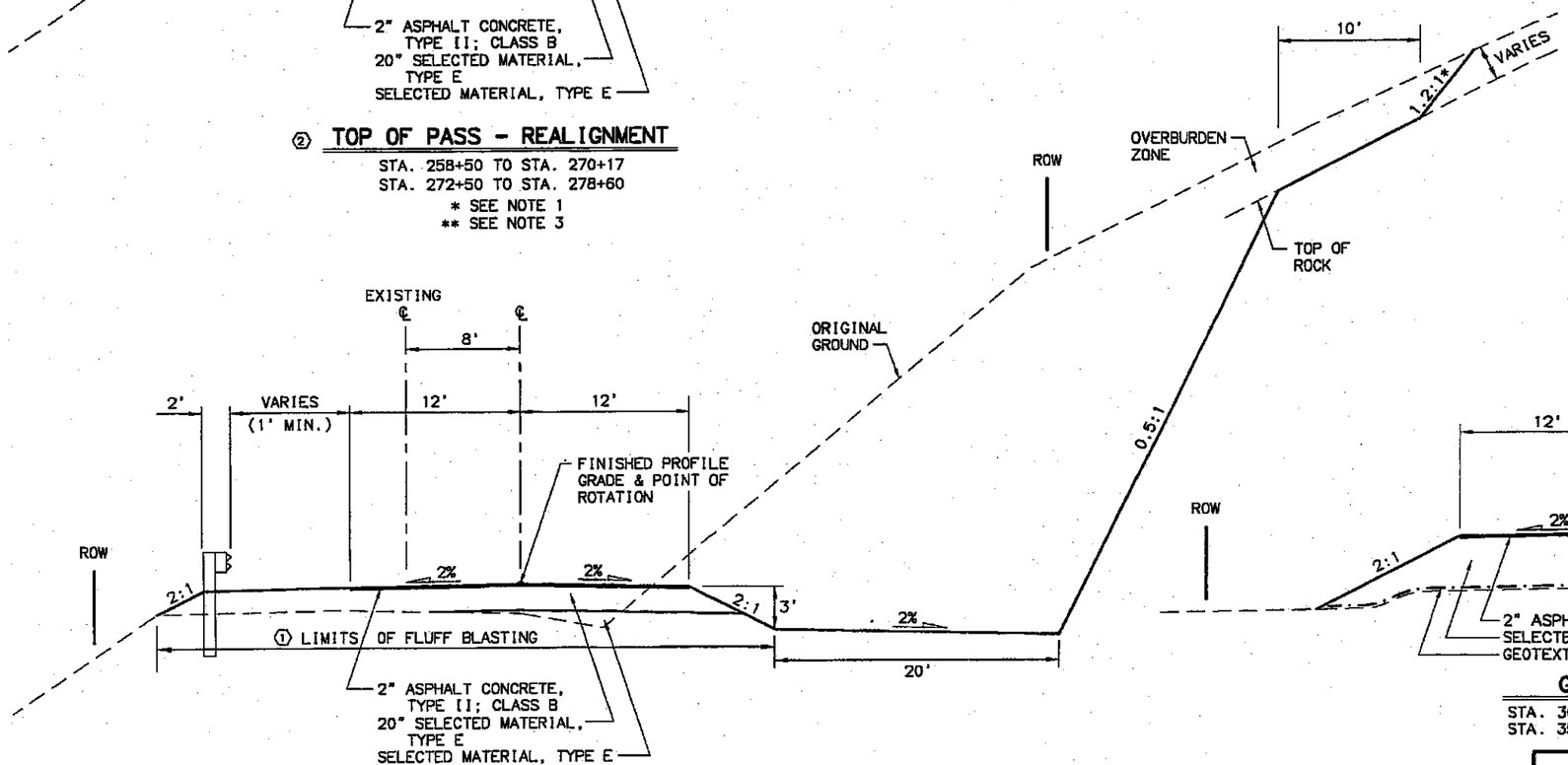


## TOP OF PASS - REALIGNMENT

STA. 270+17 TO STA. 272+50
(3) * SEE NOTE 1

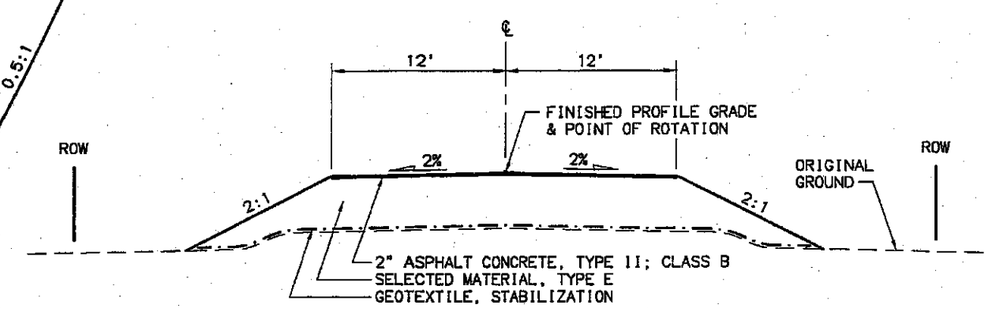


## GRADE RAISE

STA. 304+00 TO STA. 328+64
STA. 353+08 TO STA. 368+00

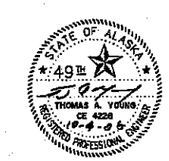


STATE OF ALASKA
DEPARTMENT OF TRANSPORTATION
AND
PUBLIC FACILITIES

KODIAK: PASAGSHAK ROAD
SURFACING IMPROVEMENTS 2005

TYPICAL SECTIONS

| DRAWING LOCATION | DATE | TIME |
|---|---|---|
| T:\pat+t\Land Projects 2004\57735 Pasag\dwg\Typ_Pasag.dwg | 08/25/2006 | 9:57:23 AM AST |

| DESIGNED BY | PL/VS |
|---|---|
| CHECKED BY | |
| DRAFTED BY | |

| XREFS | SCALE | LAYOUT |
|---|---|---|
| NONE | 1:5 | B2 |

| REVISIONS | | | STATE | PROJECT DESIGNATION | YEAR | SHEET NO. | TOTAL SHEETS |
|---|---|---|---|---|---|---|---|
| No. | DATE | DESCRIPTION | ALASKA | STP-0001(358)/57735 | 2005 | B3 | B6 |
| | | | | | | | |
| | | | | | | | |

**NOTE:**

1. TOP SURFACE OF OVERBURDEN SHALL BE UNEVEN TO DETER ATV TRAFFIC.

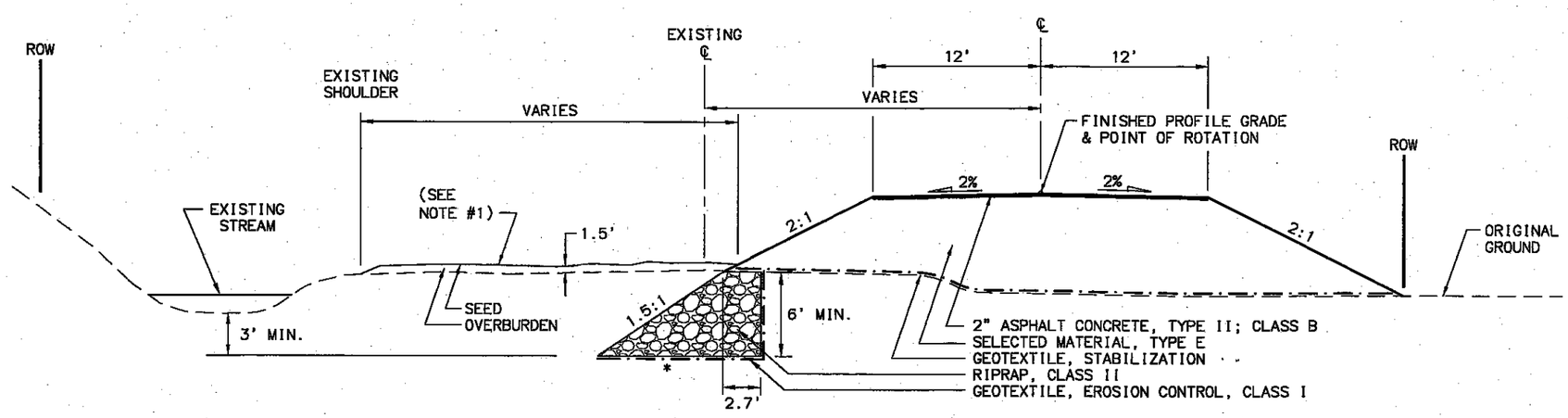


## LAKE ROSE TEAD - REALIGNMENT

STA. 328+64 TO STA. 353+08
* RIPRAP, CLASS II STA. 330+30 TO STA. 349+72

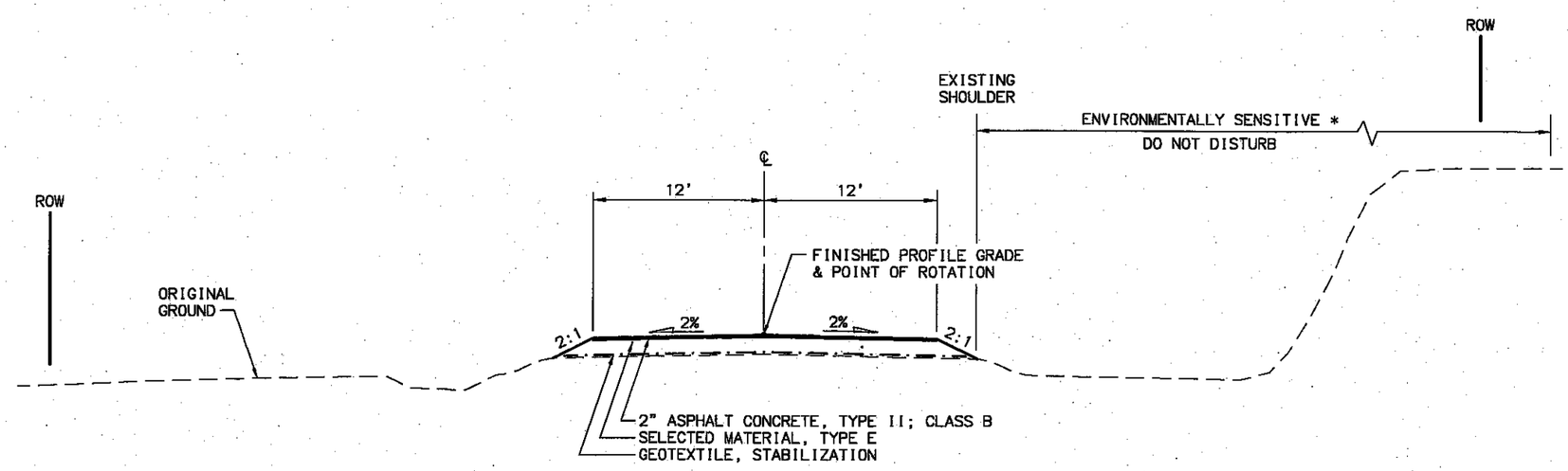


## PASAGSHAK BLUFF - REALIGNMENT

STA. 487+50 TO STA. 490+00
STA. 503+50 TO STA. 506+54.09
* STA. 505+94.47 TO STA. 506+54.09

| DRAWING LOCATION | DATE | TIME | LAYOUT | SCALE | XREFS | DESIGNED BY | CHECKED BY | DRAFTED BY |
|---|---|---|---|---|---|---|---|---|
| I:\pat8\Land Projects 2004\57735 Pasag\dwg\Typ_Pasag.dwg | 8/24/2005 | 10:58:56 AM ADT | B3 | 1:5 | NONE | | | PL/VS |

STATE OF ALASKA
DEPARTMENT OF TRANSPORTATION
AND
PUBLIC FACILITIES

STATE OF ALASKA 49TH WOLFGANG E. JUNGE CE 8735 REGISTERED PROFESSIONAL ENGINEER 9.11.05

KODIAK: PASAGSHAK ROAD
SURFACING IMPROVEMENTS 2005

TYPICAL SECTIONS

| REVISIONS | | | STATE | PROJECT DESIGNATION | YEAR | SHEET NO. | TOTAL SHEETS |
|---|---|---|---|---|---|---|---|
| No. | DATE | DESCRIPTION | ALASKA | STP-0001(358)/57735 | 2005 | B4 | B6 |
| | | | | | | | |
| | | | | | | | |

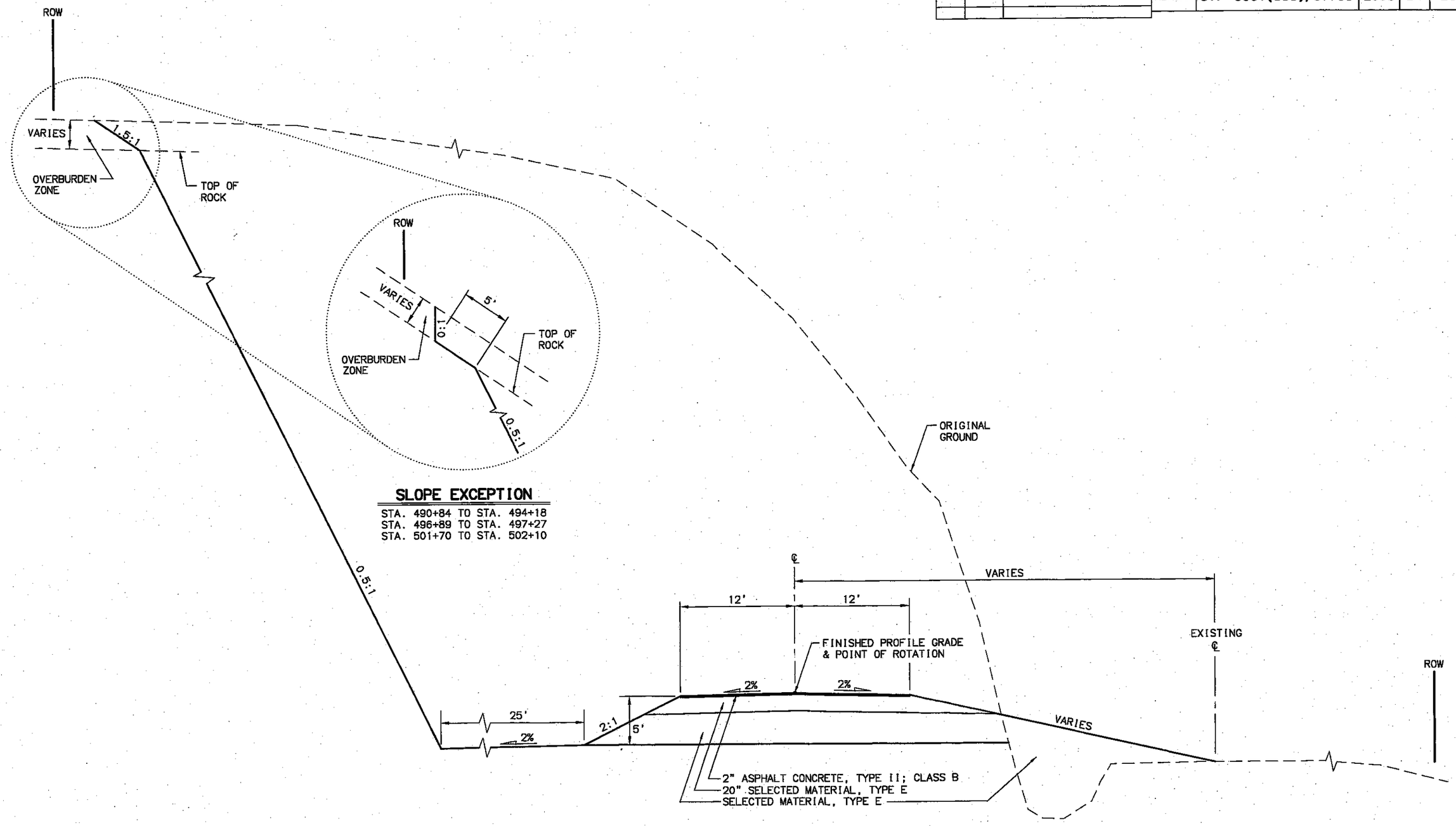


| DRAWING LOCATION | DATE | TIME | LAYOUT | SCALE | XREF'S | DESIGNED BY | DESIGNED BY | DRAFTED BY |
|---|---|---|---|---|---|---|---|---|
| T:\pat+t\Land Projects 2004\57735 Pasag\dwg\Typ_Pasag.dwg | 8/24/2005 | 10:58:56 AM ADT | B4 | 1:5 | NONE | | | PL/VS |

STATE OF ALASKA
DEPARTMENT OF TRANSPORTATION
AND
PUBLIC FACILITIES

STATE OF ALASKA 49TH WOLFGANG E. JUNGE CE 8735 REGISTERED PROFESSIONAL ENGINEER

KODIAK: PASAGSHAK ROAD
SURFACING IMPROVEMENTS 2005

TYPICAL SECTIONS

| REVISIONS | | | STATE | PROJECT DESIGNATION | YEAR | SHEET NO. | TOTAL SHEETS |
|---|---|---|---|---|---|---|---|
| No. | DATE | DESCRIPTION | ALASKA | STP-0001(358)/57735 | 2005 | B5 | B6 |
| | | | | | | | |
| | | | | | | | |

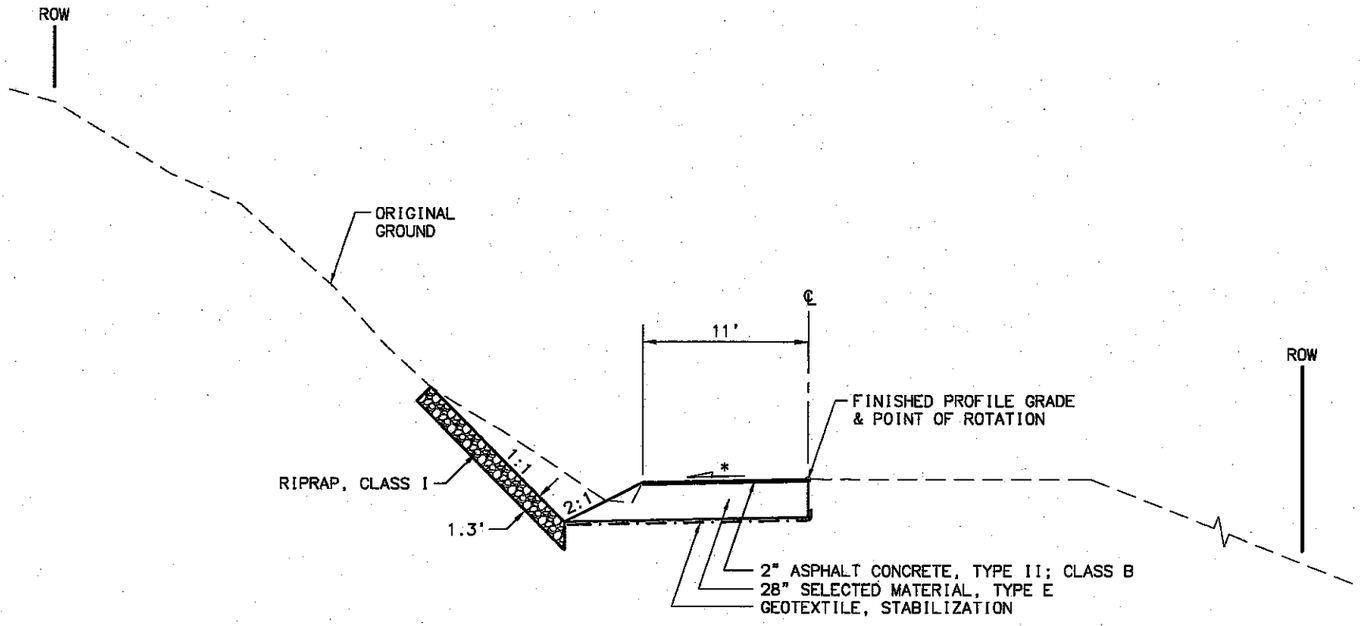


## S-CURVE

STA. 521+50 TO STA. 527+50
* MATCH EXISTING ROAD CROSS SLOPES

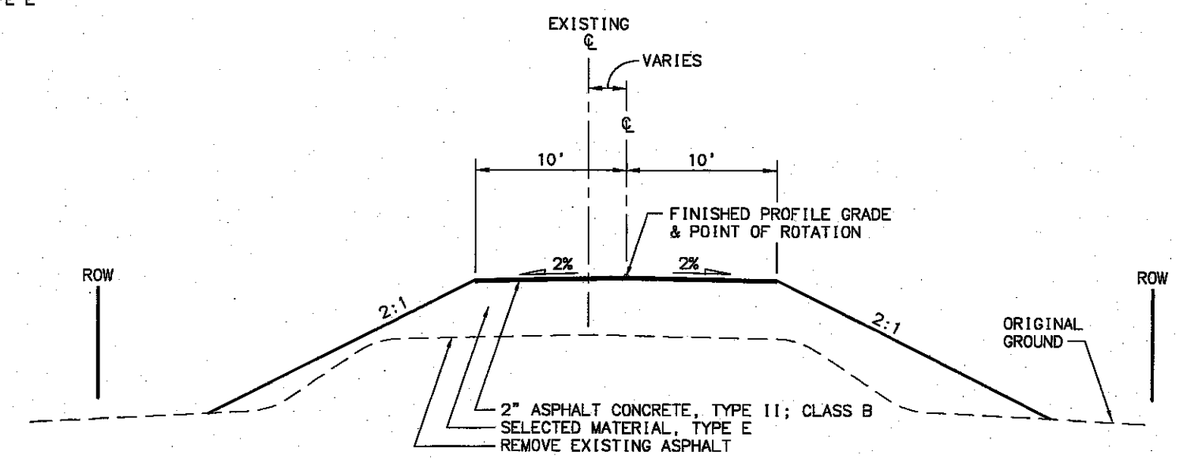


## GRADE RAISE AND ROAD SHIFT

STA. 606+00 TO STA. 611+40

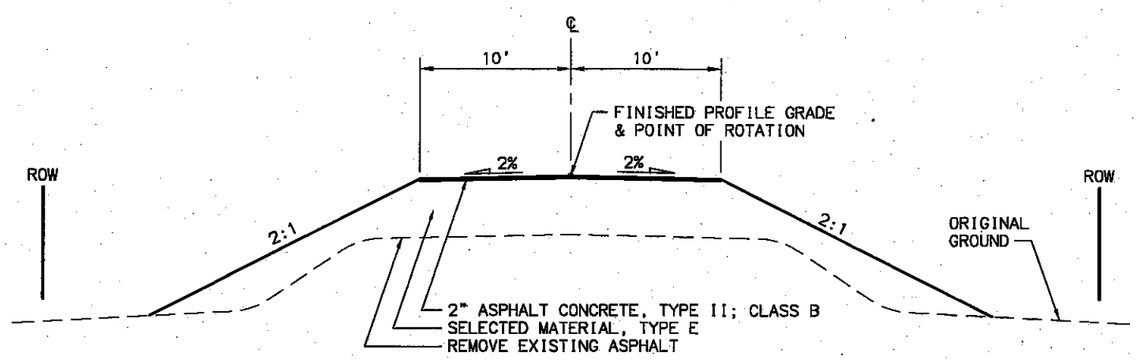


## GRADE RAISE

STA. 622+42.5 TO STA. 625+97.5
STA. 636+00 TO STA. 646+00

| DRAWING LOCATION | DATE | TIME | LAYOUT | SCALE | XREFS | DESIGNED BY / CHECKED BY / DRAFTED BY |
|---|---|---|---|---|---|---|
| T:\pattt\Land Projects 2004\57735 Pasag\dwg\Typ_Pasag.dwg | 8/24/2005 | 10:59:56 AM ADT | B5 | 1:5 | NONE | PL/VS |

STATE OF ALASKA
DEPARTMENT OF TRANSPORTATION
AND
PUBLIC FACILITIES

STATE OF ALASKA 49TH WOLFGANG E. JUNGE CE 8735 8-24-05 REGISTERED PROFESSIONAL ENGINEER

KODIAK: PASAGSHAK ROAD
SURFACING IMPROVEMENTS 2005

TYPICAL SECTIONS

| REVISIONS | | | STATE | PROJECT DESIGNATION | YEAR | SHEET NO. | TOTAL SHEETS |
|---|---|---|---|---|---|---|---|
| No. | DATE | DESCRIPTION | | | | | |
| 1 | 9/22/06 | MODIFIED ITEM NUMBER | ALASKA | STP-0001(358)/57735 | 2005 | 86 | 86 |

ADDENDUM NO. 2
ATTACHMENT NO. 1

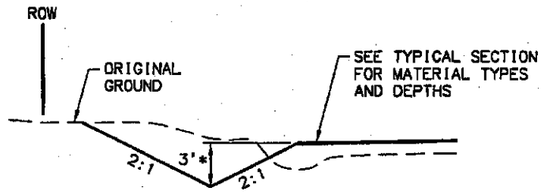


## SPECIAL DITCH

STA. 442+35 LT. TO STA. 446+89 LT.
STA. 462+43 RT. APPROXIMATELY 300 FEET

NOTE: SPECIAL DITCH SHALL BE PAID UNDER ITEM 203(36) SPECIAL DITCH

* 3 FOOT DEPTH WILL VARY, GRADE TO DRAIN FROM STA. 446+89 TO STA. 442+35

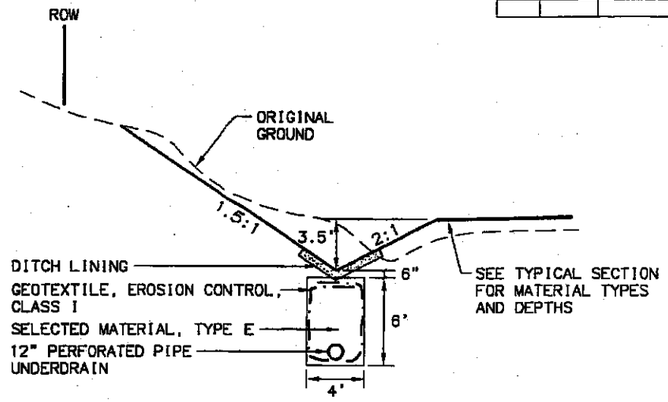


## PERFORATED PIPE UNDERDRAIN

STA. 190+61 LT. TO STA. 200+00 LT.
STA. 202+00 LT. TO STA. 211+00 LT.

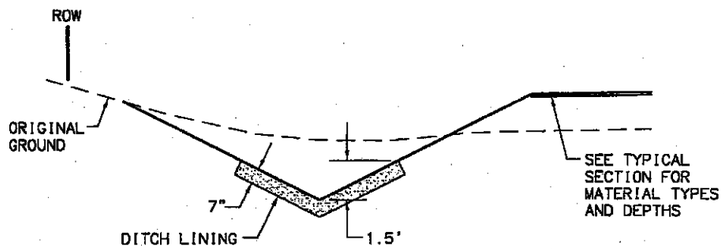


## DITCH LINING

NOTE: DITCH LINING SHALL BE PAID UNDER ITEM 610(1) DITCH LINING

(1)

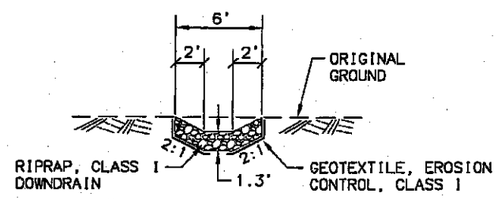


## RIPRAP DOWNDRAIN

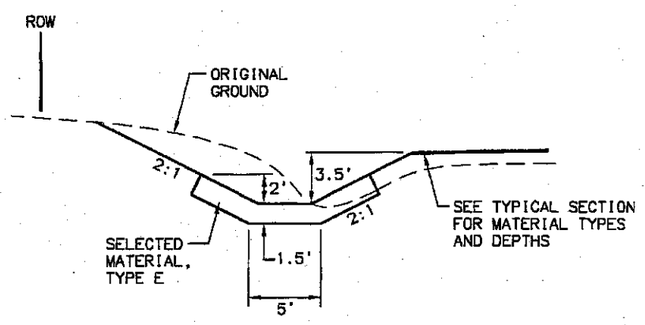


## TRAPEZOIDAL DITCH

STA. 46+00 LT. TO STA. 50+00 LT.
STA. 75+50 LT. TO STA. 77+80 LT.
STA. 189+95 LT. TO STA. 190+61 LT.

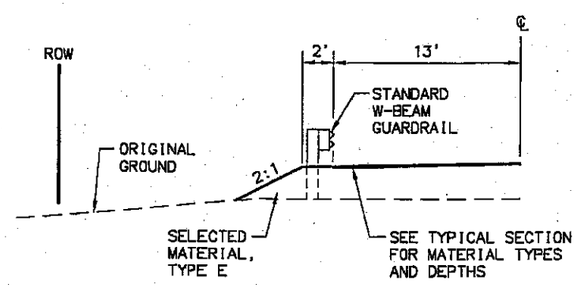


## WIDENING FOR GUARDRAIL

SEE GUARDRAIL SUMMARY TABLE

STATE OF ALASKA
DEPARTMENT OF TRANSPORTATION AND PUBLIC FACILITIES

KODIAK: PASAGSHAK ROAD SURFACING IMPROVEMENTS 2005

TYPICAL SECTIONS

DESIGNED BY PK
CHECKED BY
DRAWN BY PK/VS
XREFS NONE
SCALE 1:5
LAYOUT B6
DATE 8/24/2005
TIME 10:58:56 AM ADT
DRAWING LOCATION T:\pete\Land Projects 2004\57735 Pasag\dwg\Typ_Pasag.dwg