NO.	DATE	REVISION

STATE	PROJECT DESIGNATION	YEAR	SHEET NO.	TOTAL SHEETS
ALASKA	NFHWY00423/PENDING	2020	A1	28

CDS ROUTE: 1140000I000 MILEPOINT: 152.846 TO 156.603

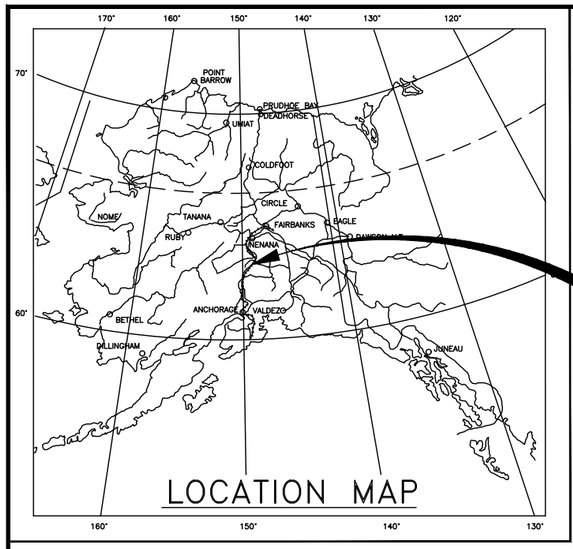

PROJECT LOCATION

STATE OF ALASKA
DEPARTMENT OF TRANSPORTATION
&
PUBLIC FACILITIES

PROPOSED HIGHWAY PROJECT

NFHWY00423/PENDING

PARKS HIGHWAY MP 188–192 RESURFACING

GRADING, DRAINAGE, & PAVING

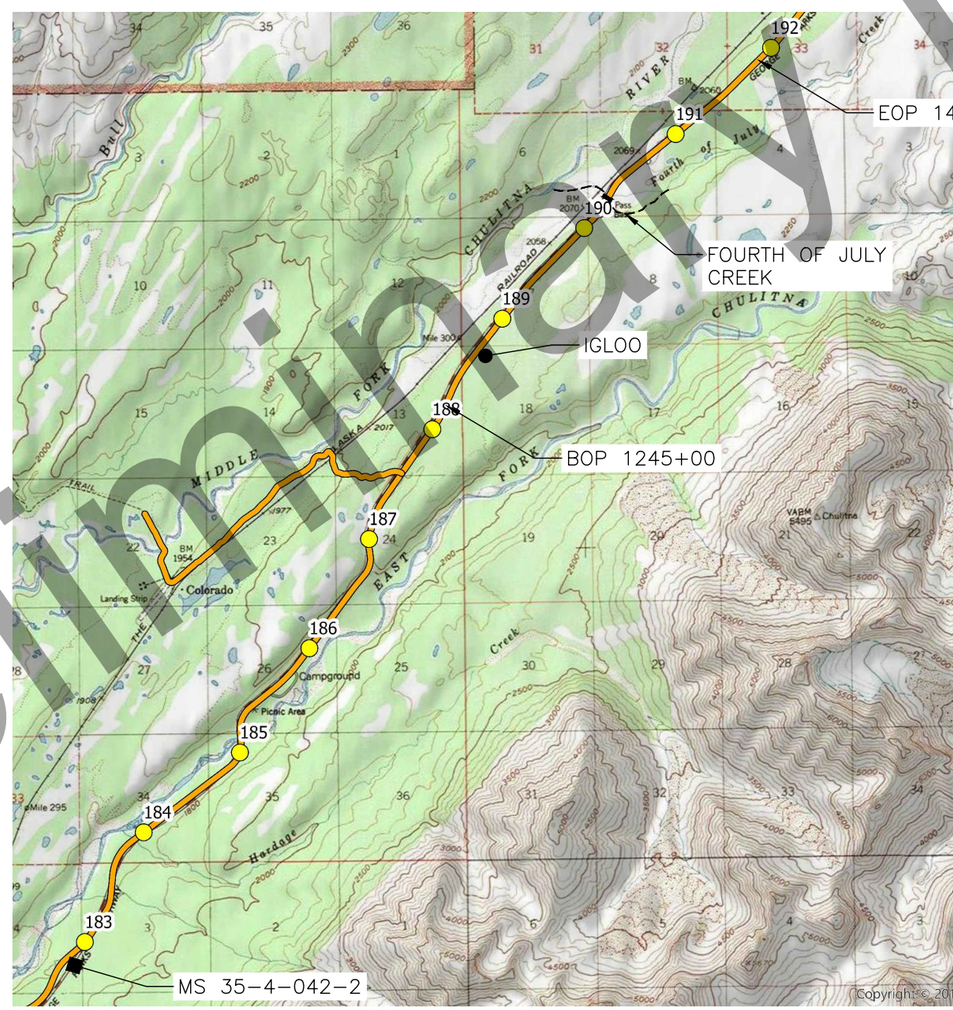

INDEX OF SHEETS

SHEET NO.	DESCRIPTION
A1	TITLE SHEET
A2	LEGEND & SHEET LAYOUT INDEX
B1	TYPICAL SECTIONS
C1	ESTIMATE OF QUANTITIES & GENERAL NOTES
E1–E7	CULVERT/DRAINAGE DETAILS & SUMMARY
F1–F14	PLAN & PROFILE
G1	APPROACH SUMMARY & DETAILS
H1	SIGNING & STRIPING
Q1–Q?	EROSION SEDIMENT CONTROL PLANS
T1	TRAFFIC CONTROL PLANS
V1–V10	STANDARD DRAWINGS

DESIGN DESIGNATIONS

ADT (2017)	1175
ADT (2035)	1500
DHV (21%)	310
PERCENT TRUCKS (T)	19.35%
DIRECTIONAL SPLIT (D)	45/55
DESIGN SPEED (V)	65 MPH
DESIGN EAL'S (15 YEARS)	784,809

PROJECT SUMMARY

WIDTH OF PAVEMENT	40'
LENGTH OF GRADING	19600
LENGTH OF PAVING	19600
LENGTH OF PROJECT	19600

GUANGYAN GRIFFIN, P.E., PROJECT MANAGER
LINDSEY KROMREY, DESIGNER

STATE OF ALASKA
DEPARTMENT OF TRANSPORTATION
&
PUBLIC FACILITIES

APPROVED BY:

_____ DATE _____

Sarah E. Schacher, P.E.
Preconstruction Engineer, Northern Region

ACCEPTED FOR CONSTRUCTION:

_____ DATE _____

Ryan F. Anderson, P.E.
Regional Director, Northern Region

Preliminary Plans

R:\Projects\Parks_Hwy\00423_Parks_188_192_Resurfacing\6 Design\5 Civil 3D\00423_A_TITLE-A1 TITLE Fri, Aug/28/20 04:55pm

NO.	DATE	REVISION

STATE	PROJECT DESIGNATION	YEAR	SHEET NO.	TOTAL SHEETS
ALASKA	NFHWY00423/PENDING	2020	A2	A2

	RECOVERED	SET
BLM MONUMENT		
GLO MONUMENT		
USC&GS MONUMENT		
PRIMARY MONUMENT		
CENTERLINE MONUMENT IN CASING		
PRIMARY R.O.W. MONUMENT		
BEARING OBJECT		
MISCELLANEOUS MONUMENT		
LINE OF SIGHT MONUMENT		
CONCRETE R.O.W. MONUMENT		
BENCHMARK		BM
REBAR AND CAP		
REBAR		
IRON PIPE		
PK NAIL		
SPIKE		
HUB AND TACK		
CONSTRUCTION CENTERLINE	5+00	
MISCELLANEOUS CENTERLINE	10+00	
STATION EQUATION	"L"48+97.23 POT BK= "O"48+97.23 PC AHD	
PROJECT RIGHT-OF-WAY LINE	R/W	
EXISTING RIGHT-OF-WAY LINE		
EXISTING PROPERTY LINE		
CONTROLLED ACCESS LINE	C/A	
UTILITY EASEMENT LINE	PUE	
TEMPORARY EASEMENT LINE (TCP OR TCE)	TCP	
ACCESS OR SECTION LINE EASEMENT	ACCESS EASEMENT	
PROPOSED CUT SLOPE LIMIT		
PROPOSED FILL SLOPE LIMIT		
SECTION LINE		
1/4 SECTION LINE		
1/16 SECTION LINE		
TOWNSHIP & RANGE LINE	T. 2 N. / T. 1 N. / T. 1 E. / T. 2 E.	

	EXISTING	PROPOSED
SANITARY SEWER (FLOW DIRECTION →)	SS	SS
FUEL LINE	O	O
GAS LINE	G	G
WATER LINE	W	W
METER, VALVE, FIRE HYDRANT	W	W
EXISTING STORM DRAIN (FLOW DIRECTION →)	SD	
PROPOSED STORM DRAIN		S-10, S-11, P-11, P-10, MH
FIBER OPTIC LINE	FO	
DIRECT BURIAL TELEPHONE CABLE	T	T
DIRECT BURIAL ELECTRIC CABLE	E	E
ELECTRIC LINE (OVERHEAD)		
POWER POLE LINE		
JOINT USE POWER & TELEPHONE		
TELEPHONE POLE LINE		
POLE ANCHOR		
STUB POLE (POWER OR TELEPHONE)		
TELEPHONE DUCT	T	T
TELEPHONE PEDESTAL		
BURIED CABLE MARKER		
PIPELINE MARKER OR VALVE		
CATCH BASIN OR DROP INLET		
MANHOLE	MH	MH
SANITARY SEWER CLEAN OUT		

	EXISTING	PROPOSED
ROADWAY/PAVEMENT EDGE		
FENCE	X	X
CURB AND GUTTER		
DETECTABLE WARNINGS		
GUARDRAIL		
CULVERT PIPE		
SIGN		
MAILBOX	MB	MB
RAILROAD TRACKS		
RAILROAD DEVICES	CROSS-BUCK, FLASHING LIGHT, CANTILEVER, SWITCH	
TREE LINE		
WATER BOUNDARY		
ORDINARY HIGH WATER LINE		
FLOW CENTERLINE		
FLOW DIRECTION		
WETLANDS		
EXISTING BUILDINGS	H	H = HOUSE G = GARAGE M = MERCHANT/STORE B = BARN S = SHED P = PRIVY SS = SERVICE STATION W = WAREHOUSE
POST OR BOLLARD		
WELL OR MONITORING WELL	W, MW	
SEPTIC PIPE	S	
FUEL TANK FILL PIPE/VENT	P	
SATELLITE DISH	SAT. DISH	
TEST HOLE	TH	
CONIFER TREE		
DECIDUOUS TREE		
GRAVE		
THERMOSIPHON		
PARKING METER		
VEHICLE PLUG-IN		
DELINEATOR/GUIDE MARKER		

	EXISTING	PROPOSED
JUNCTION BOX, TYPE IA		5
JUNCTION BOX, TYPE II		6
JUNCTION BOX, TYPE III		3
SIGNAL FACE, VEHICULAR	42	42
SIGNAL FACE, BACKPLATE	42	42
SIGNAL FACE, LEFT TURN, BACKPLATE	43	43
SIGNAL FACE, PEDESTRIAN	48	48
LOOP DETECTOR	33	73
VIDEO DETECTOR	2	2
RADAR DETECTOR	4	4A
OPTICOM DETECTOR	1	1
PEDESTRIAN PUSH BUTTON	1	1
SIGNAL POST W/O MAST ARM		1
SIGNAL POLE W/MAST ARM		4
SIGNAL CONTROLLER		
LOAD CENTER		
LUMINAIRE		122
RIGID METAL CONDUIT		

ABBREVIATIONS:

APPROX	APPROXIMATLY
℄	CENTERLINE
CY	CUBIC YARD
E	EAST, EASTING
ELE, ELEV	ELEVATION
FT. '	FOOT, FEET
H	HORIZONTAL
HW/D	HEADWATER TO DIAMETER RATIO
IE	INVERT ELEVATION
IN, "	INCH, INCHES
L	LENGTH OF CURVE
L.C.L	LEFT OF CENTERLINE
LT	LEFT
LVC	LENGTH OF VERTICAL CURVE
MAX	MAXIMUM
MIN	MINIMUM
N	NORTH, NORTHING
NO.	NUMBER
NTS	NOT TO SCALE
O.C.	ON CENTER
PC	POINT OF CURVATURE
POT	POINT ON TANGENT
PST	PERFORATED STEEL TUBE
PT	POINT OF TANGENCY
PVI	POINT OF VERTICAL INTERSECTION
R	RADIUS
R.C.L	RIGHT OF CENTERLINE
RT	RIGHT
S	SOUTH
SQ. FT.	SQUARE FOOT
STA	STATION
T	TANGENT
TCE	TEMPORARY CONSTRUCTION EASEMENT
TS	TUBE STEEL
TYP	TYPICAL
V	VERTICAL
VPC	VERTICAL POINT OF CURVATURE
VPI	VERTICAL POINT OF INTERSECTION
VPT	VERTICAL POINT OF TANGENCY
W	WEST
WWR	WELDED WIRE REINFORCEMENT
Ø	DIAMETER

LEGEND & ABBREVIATIONS AND ABBREVIATIONS

STATE OF ALASKA 49TH
GUANGYAN TU GRIFFIN
CE 11229
REGISTERED PROFESSIONAL ENGINEER

Preliminary Plans

PLANS DEVELOPED BY: STATE OF ALASKA DEPARTMENT OF TRANSPORTATION & PUBLIC FACILITIES, NORTHERN REGION, 2301 PEGER ROAD, FAIRBANKS, AK 99709 (907)451-2200
R:\Projects\Parks_Hwy\00423_Parks_188_192_Resurfacing\6 Design\5 Civil 3D\00423_A_TITLE-A2 LEGEND Fri, Aug/28/20 04:35pm

NO.	DATE	REVISION

STATE	PROJECT DESIGNATION	YEAR	SHEET NO.	TOTAL SHEETS
ALASKA	NFHWY00423/PENDING	2020	B1	B1

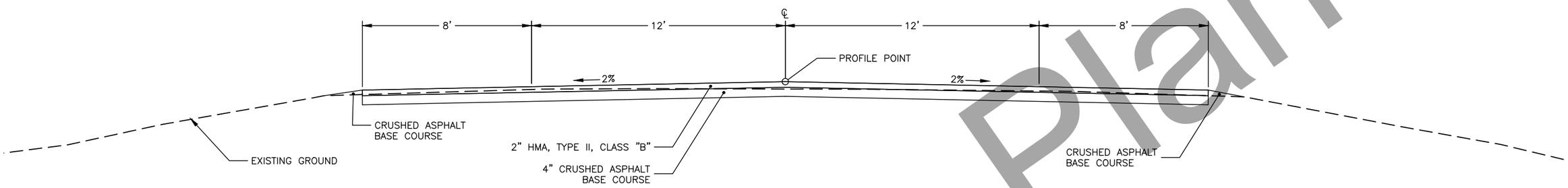

TYPICAL SECTION

PAVEMENT NOTES:

1. SAW CUT ALL TRANSITION MATCH POINTS. APPLY STE-1 TACK COAT TO ALL SAW CUT FACES PRIOR TO PAVING. THIS WORK IS SUBSIDIARY TO ITEM 401.0001.002B HMA, TYPE II; CLASS B.
2. TRANSITION INTO BROAD PASS RAILROAD OVERCROSSING PROJECT AT 20:1 VERTICAL TAPER OR AS DIRECTED BY THE ENGINEER.
3. IMPORTED MATERIAL FOR GRADING AT APPROACHES AND ASPHALT EDGE IS SUBSIDIARY.
4. LOCATE AND PROTECT ALL EXISTING UTILITIES WITHIN PROJECT LIMITS PRIOR TO BEGINNING ANY GROUND DISTURBING WORK.
5. RECONSTRUCT SUPERELEVATIONS TO AS-BUILT CONDITIONS OR AS DIRECTED BY THE ENGINEER.
6. 10 DAYS PRIOR TO GROUND DISTURBANCE, PROVIDE THE ENGINEER WITH CROSS SECTIONS INCLUDING CENTERLINE, EDGE OF PAVEMENT, AND TOE OF SLOPE SHOTS EVERY 100 FEET ON TANGENTS AND 50 FEET ON CURVES. THIS IS SUBSIDIARY TO CONSTRUCTION SURVEYING.
7. EXCAVATION REQUIRED TO BUILD TRANSITIONS IS SUBSIDIARY.

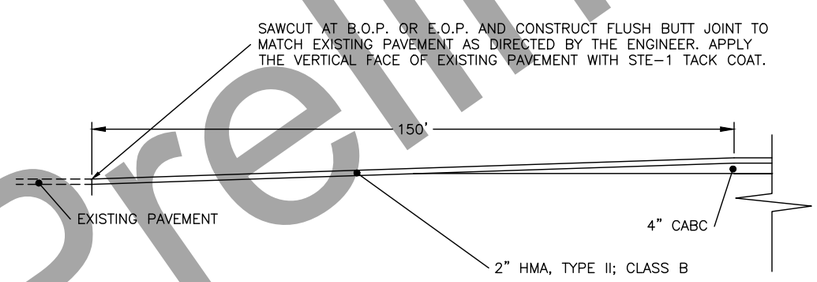

B.O.P & E.O.P TRANSITION DETAIL

TYPICAL SECTIONS

STATE OF ALASKA 49TH GUANGYAN TU GRIFFIN CE 11229 REGISTERED PROFESSIONAL ENGINEER

Preliminary Plans

PLANS DEVELOPED BY: STATE OF ALASKA DEPARTMENT OF TRANSPORTATION & PUBLIC FACILITIES, NORTHERN REGION, 2301 PEGER ROAD, FAIRBANKS, AK 99709 (907)451-2200
R:\Projects\Parks_Hwy\00423_Parks_188_192_Resurfacing\6 Design\5 Civil 3D\00423_A_TITLE-B1 TYPICAL SECTIONS Fri, Aug/28/20 04:55pm

NO.	DATE	REVISION

STATE	PROJECT DESIGNATION	YEAR	SHEET NO.	TOTAL SHEETS
ALASKA	NFHWY00423/PENDING	2020	C1	C1

ESTIMATE OF QUANTITIES

ITEM NUMBER	PAY ITEM	PAY UNIT	QUANTITY
201.0001.0000	CLEARING	ACRE	18
202.0017.0000	REMOVAL OF CULVERT PIPE	EACH	27
203.0019.0000	UNCLASSIFIED EXCAVATION	LUMP SUM	ALL REQUIRED
203.0006.0000	BORROW	TON	9000
301.0003.00D1	AGGREGATE BASE COURSE, GRADING D-1	TON	5600
303.0003.0000	RECONDITIONING	LUMP SUM	ALL REQUIRED
304.0003.000F	SUBBASE, GRADING F	TON	9000
308.0001.0000	CRUSHED ASPHALT BASE COURSE	SQUARE YARD	89000
401.0001.002B	HMA, TYPE II; CLASS B	TON	10400
401.0004.5240	ASPHALT BINDER, GRADE PG 52-40	TON	572
401.0005.002B	HMA, TEMPORARY, TYPE II; CLASS B	TON	690
401.0008.002B	HMA PRICE ADJUSTMENT, TYPE II; CLASS B	CONTINGENT SUM	ALL REQUIRED
401.0009.0000	LONGITUDINAL JOINT DENSITY PRICE ADJUSTMENT	CONTINGENT SUM	ALL REQUIRED
401.0010.0001	PAVEMENT SMOOTHNESS PRICE ADJUSTMENT, METHOD 1	CONTINGENT SUM	ALL REQUIRED
401.0015.0000	ASPHALT MATERIAL PRICE ADJUSTMENT	CONTINGENT SUM	ALL REQUIRED
406.0002.0000	RUMBLES STRIPS	STATION	196
602.0001.0144	STRUACTUAL PLATE PIPE, 144 INCH DIAMETER, GAUGE 8	LINEAR FOOT	128
603.0001.0024	CSP 24 INCH	LINEAR FOOT	171
603.0001.0036	CSP 36 INCH	LINEAR FOOT	1497
603.0001.0048	CSP 48 INCH	LINEAR FOOT	851
603.0001.0024	DEADMAN	EACH	1
611.0001.0001	RIPRAP, CLASS I	CUBIC YARD	630
611.0001.0002	RIPRAP, CLASS II	CUBIC YARD	450
613.0002.0000	CULVERT MARKER POST	EACH	48
615.0001.0000	STANDARD SIGN	SQUARE FOOT	50.7
616.0002.0050	THAW PIPE 1/2 INCH DIAMETER	EACH	28
618.0002.0000	SEEDING	POUND	500
628.0100.0000	FISH PASSAGE SUBSTRATE	LUMP SUM	ALL REQUIRED
631.0002.0001	GEOTEXTILE, EROSION CONTROL, CLASS 1	SQUARE YARD	2450
639.0001.0000	DRIVEWAY	EACH	9
640.0001.0000	MOBILIZATION AND DEMOBILIZATION	LUMP SUM	ALL REQUIRED
640.0004.0000	WORKER MEALS AND LODGING, OR PER DIEM	LUMP SUM	ALL REQUIRED
641.0001.0000	EROSION, SEDIMENT AND POLLUTION CONTROL ADMINISTRATION	LUMP SUM	ALL REQUIRED
641.0003.0000	TEMPORARY EROSION, SEDIMENT AND POLLUTION CONTROL	LUMP SUM	ALL REQUIRED
641.0005.0000	TEMPORARY EROSION, SEDIMENT AND POLLUTION CONTROL BY DIRECTIVE	CONTINGENT SUM	ALL REQUIRED
641.0006.0000	WITHHOLDING	CONTINGENT SUM	ALL REQUIRED
641.0007.0000	SWPPP MANAGER	LUMP SUM	ALL REQUIRED
642.0001.0000	CONSTRUCTION SURVEYING	LUMP SUM	ALL REQUIRED
642.0003.0000	THREE PERSON SURVEY PARTY	CONTINGENT SUM	ALL REQUIRED
643.0002.0000	TRAFFIC MAINTENANCE	LUMP SUM	ALL REQUIRED
643.0003.0000	PERMANENT CONSTRUCTION SIGNS	LUMP SUM	ALL REQUIRED
643.0023.0000	TRAFFIC PRICE ADJUSTMENT	CONTINGENT SUM	ALL REQUIRED
643.0025.0000	TRAFFIC CONTROL	CONTINGENT SUM	ALL REQUIRED
644.0001.0000	FIELD OFFICE	LUMP SUM	ALL REQUIRED
644.0002.0000	FIELD LABORATORY	LUMP SUM	ALL REQUIRED
644.0006.0000	VEHICLE	LUMP SUM	ALL REQUIRED
644.0015.0000	NUCLEAR TESTING EQUIPMENT STORAGE SHED	EACH	1
644.0016.0000	STORAGE CONTAINER	EACH	1
644.2002.0000	FIELD COMMUNICATIONS	CONTINGENT SUM	ALL REQUIRED
646.0001.0000	CPM SCHEDULING	LUMP SUM	ALL REQUIRED
670.0001.0000	PAINTED TRAFFIC MARKINGS	LUMP SUM	ALL REQUIRED

GENERAL NOTES:

1. USE PARKS HIGHWAY MP 194 BROAD PASS RAILROAD PROJECT #61277 FOR THE BASIS OF STATIONING AND CONTROL.
2. ALL UNUSABLE MATERIAL IS TO BE DISPOSED OF OUTSIDE THE PROJECT LIMITS. THE CONTRACTOR IS RESPONSIBLE FOR OBTAINING WASTE DISPOSAL SITES AT AREAS APPROVED BY THE ENGINEER.
3. TRAFFIC IS NOT TO BE RESTRICTED BETWEEN 7AM AND 7PM.
4. TO MEET PROVISIONS OF THE CGP, SEEDING MAY REQUIRE MULTIPLE MOBILIZATIONS. ALL ADDITIONAL MOBILIZATIONS REQUIRED TO MEET THE CGP ARE SUBSIDIARY TO 643 PAY ITEMS. SEED ALL FORESLOPES, BACKSLOPES, DITCHES, AND DISTURBED AREAS IN ACCORDANCE WITH SECTION 618, EXCEPT WHERE RIPRAP IS INSTALLED.

PAVING NOTES:

1. WHERE NEW PAVEMENT IS TO BE MATCHED TO EXISTING PAVEMENT, A STRAIGHT SAWCUT SHALL BE MADE AND THE EXISTING PAVEMENT EDGE SHALL BE CLEANED AND PAINTED WITH STE-1 ASPHALT FOR TACK COAT. IF DAMAGE OCCURS AS A RESULT OF SAWCUTTING, THE CONTRACTOR IS RESPONSIBLE FOR REPAIR OR REPLACEMENT COSTS. THIS WORK IS SUBSIDIARY TO OTHER PAY ITEMS.
2. IF HMA SURFACE HAS NOT BEEN FINISHED BY THE CONTRACT COMPLETION DATE, IT WILL BE CONSIDERED AN UNACCEPTABLE DRIVING SURFACE AND A TRAFFIC PRICE ADJUSTMENT WILL BE ASSESSED IN ACCORDANCE WITH SECTION 643-3.06 TRAFFIC PRICE ADJUSTMENT, FOR EACH SEGMENT UNTIL THE ASPHALT SURFACE IS COMPLETE AND ACCEPTED BY THE ENGINEER IN WRITING.
3. SAW CUT ALL TRANSITION MATCH POINTS. SURFACE TO BE CLEANED BEFORE STE-1 APPLICATION. APPLY STE-1 TACK COAT TO ALL SAW CUT FACES ENTIRELY PRIOR TO PAVING.
4. IMPORTED MATERIAL FOR GRADING AT APPROACHES AND ASPHALT EDGE IS SUBSIDIARY SHALL BE PAID FOR BY UNIT PRICE.
5. LOCATE AND PROTECT ALL EXISTING UTILITIES WITHIN PROJECT LIMITS PRIOR TO BEGINNING ANY GROUND DISTURBING WORK.
6. EXCAVATION REQUIRED TO BUILD TRANSITION IS SUBSIDIARY TO ITEM 203.0019.0000 UNCLASSIFIED EXCAVATION.

STRIPING NOTES:

1. STRIPING WILL BE PERFORMED IN ACCORDANCE WITH SECTION 670 OF THE SPECIFICATIONS, STANDARD DRAWING T-21.03 AND THE MUTCD AS DIRECTED BY THE ENGINEER.
2. AT SIDE STREETS, MAINTAIN CONTINUOUS LINE THROUGH ALL APPROACHES.
3. TRAFFIC MARKINGS SHALL BE PLACED ACCORDING TO STANDARD DRAWING T-21.03.
4. TRAFFIC MARKINGS SHALL BE LAID OUT ACCORDING TO SUBSECTION 670-3.05.
5. A 10/30 STRIPE/SKIP RATIO SHALL BE USED FOR THIS PROJECT.
6. IF NEW AND EXISTING LONGITUDINAL MARKINGS ARE NOT ALIGNED AT THE MATCH LINE, TRANSITION BETWEEN THE TWO USING A 100:1 TAPER.

ESTIMATE OF LUMP SUM ITEM QUANTITY

ITEM NUMBER	DESCRIPTION	QUANTITY	UNIT
670.0001.0000	PAINTED TRAFFIC MARKINGS	72520	LF
203.0019.0000	UNCLASSIFIED EXCAVATION	9000	CY
628.0100.0000	FISH PASSAGE SUBSTRATE	310	CY

ESTIMATING FACTORS

ITEM NO.	DESCRIPTION	QUANTITY	CONVERSION UNIT
203.0006.0000	BORROW	2	TONS / CY
301.0001.00D1	AGGREGATE BASE COURSE, GRADING D-1	2	TONS / CY
304.0001.000F	SUBBASE, GRADING F	2	TONS / CY
401.0001.002B	HMA, TYPE II; CLASS B	115	LBS / SY / INCH
401.0004.5240	ASPHALT BINDER, GRADE 52-28	5.5	% OF TOTAL WEIGHT OF 401.0001.002B

STATE OF ALASKA 49TH
GUANGYAN TU GRIFFIN
CE 11229
REGISTERED PROFESSIONAL ENGINEER

ESTIMATE OF QUANTITIES & GENERAL NOTES

Preliminary Plans

PLANS DEVELOPED BY: STATE OF ALASKA DEPARTMENT OF TRANSPORTATION & PUBLIC FACILITIES, NORTHERN REGION, 2301 PEGER ROAD, FAIRBANKS, AK 99709 (907)451-2200
R:\Projects\Parks_Hwy\00423_Parks_188_192_Resurfacing\6 Design\5 Civil 3D\00423_Summary_Details_Est-C1 ESTIMATE AND NOTES Fri, Aug/28/20 04:55pm

NO.	DATE	REVISION

STATE	PROJECT DESIGNATION	YEAR	SHEET NO.	TOTAL SHEETS
ALASKA	NFHWY00423/PENDING	2020	E1	E8

CULVERT SUMMARY

CULVERT NO.	PROJECT STATION	EXISTING CULVERT	202.0017.0000 REMOVAL OF CULVERT PIPE (EA)	602 & 603 PAY ITEMS (FT)				OFFSET (FT)	OFFSET DIR	611.0001.0001 RIPRAP, CLASS I (CY)		613.0002.0000 CULVERT MARKER POSTS (EA)	616.0002.0050 1/2" DIA THAW PIPE (EA)	NEW CULVERT TYPE	REMARKS	AS-BUILT CENTERLINE LOCATION		
				24"	36"	48"	144" SPP			INLET	OUTLET					STATION	LATITUDE	LONGITUDE
1	1248+01	24" X 109' CSP	1		115						6.4	2	1	C X				
2	1249+94	24" X 109' CSP	1		113						6.4	2	1	C X				
3	1252+69	24" X 103' CSP	1		103						6.4	2	1	C X				
4	1261+26	48" x 105' CSP	1			103				37.5	22	2	1	C X	REMOVE EXISTING PIPE, INSTALL NEW AT STA 1261+27			
5	1261+33	48" X 105' CSP	1			108				37.5	22	2	1	C X	DAYLIGHT CHANNEL AT INLET AND OUTLET			
6	1265+69	30" X 96' CSP	1		98						6.4	2	1	C X	DAYLIGHT CHANNEL AT INLET AND OUTLET			
7	1267+08	24" X 64' CSP	1	64				48	RT				1	C A				
8	1271+08	24" X 65' CSP	1	65				47	RT				1	C A				
9	1275+80	36" X 110' CSP	1			102				49	34	2	1	C X	DAYLIGHT CHANNEL AT INLET AND OUTLET			
10	1281+75	36" X 112' CSP	1			110				49	34	2	1	C X	DAYLIGHT CHANNEL AT INLET AND OUTLET			
11	1284+70	30" X 93' CSP	1		81						6.4	2	1	C X				
12	1298+00	36" X 96' CSP	1			102				49	34	2	1	C X	DAYLIGHT CHANNEL AT INLET AND OUTLET			
13	1307+37	36" X 130' CSP	1			127				49	34	2	1	C X	DAYLIGHT CHANNEL AT INLET AND OUTLET			
14	1318+30	24" X 97' CSP	1		97						6.4	2	1	C X	DAYLIGHT CHANNEL AT INLET AND OUTLET			
15	1326+69	36" X 90' CSP	1			76				49	34	2	1	C X	RECONDITIONING RIGHT DITCH, AND DAYLIGHT CHANNEL			
16	1332+58	30" X 90' CSP	1		96						6.4	2	1	C X				
17	1345+63	24" X 42' CSP	1	42				46	LT				1	C A				
18	1352+64	84" X 102' CSP	1												4TH OF JULY CREEK, REMOVE HEADWALL			
19	1352+68						128					2	2	C X F	NEW 4TH OF JULY FISH PASSAGE, PLACE RIPRAP, CLASS II AT INLET WITH 314 CY AND OUTLET AT 136 CY.			
20	1352+73	84" X 100' CSP	1												4TH OF JULY CREEK, REMOVE HEADWALL			
21	1352+81					123						2	1	C X	NEW 4TH OF JULY FLANKER			
22	1374+87	24" X 158' CSP	1		154						6.4	2	1	C X				
23	1387+70	24" X 87' CSP	1		84						6.4	2	1	C X				
24	1392+69	24" X 92' CSP	1		88						6.4	2	1	C X				
25	1401+68	24" X 93' CSP	1		92						6.4	2	1	C X				
26	1410+5	24" X 84' CSP	1		84						6.4	2	1	C X				
27	1422+91	24" X 95' CSP	1		99						6.4	2	1	C X				
28	1427+84	30" X 96' CSP	1		102						6.4	2	1	C X				
29	1433+20	24" X 83' CSP	1		91						6.4	2	1	C X				
	SUBTOTALS:		27	171	1497	851	128			630.0		48	28					

CULVERT NOTES:

1. STATIONING AND SKEW FOR CULVERTS ARE APPROXIMATE. STAKE CULVERTS TO FIT FIELD CONDITIONS AND AS DIRECTED BY THE ENGINEER.
2. CULVERT LENGTHS ARE APPROXIMATE AND SHALL BE FIELD VERIFIED BY THE CONTRACTOR. WHEN INSTALLING SKEWED CULVERTS, ENSURE THE FINAL LENGTH IS DETERMINED OFF THE NEAR EDGE, NOT THE CENTERLINE OF THE CULVERT.
3. REMOVAL OF EXISTING CULVERTS, MARKER POSTS, HEADWALLS, AND THAW PIPES BECOME THE PROPERTY OF THE CONTRACTOR AND SHALL BE REMOVED FROM THE PROJECT AND DISPOSED OF AT NO ADDITIONAL COST TO THE DEPARTMENT, UNLESS NOTED OTHERWISE.
4. IN AREAS OF POOR FOUNDATION, SUBEXCAVATE BENEATH CULVERTS 1 TO 3 FEET, OR GREATER AS DIRECTED BY THE ENGINEER. ADDITIONAL EXCAVATION AND SUBSEQUENT CULVERT BEDDING MATERIAL WILL BE PAID FOR BY UNIT PRICES.
5. MINIMUM ALLOWABLE CULVERT CROSS SLOPE IS 0.5%, UNLESS NOTED OTHERWISE ON THE PLANS.
6. ALL CULVERTS SHALL HAVE A MINIMUM CAMBER EQUAL TO 1% OF THE LENGTH OF THE PIPE, UNLESS THE PROJECT ENGINEER DIRECTS OTHERWISE.
7. NO CULVERT SHALL BE PLACED UNTIL THE BED HAS BEEN APPROVED BY THE ENGINEER.
8. WHERE APRONS ARE NOT SPECIFIED, MINIMIZE DISTURBANCE TO THE VEGETATIVE MAT AROUND CULVERT ENDS, BUT CLEAR AND GRADE AS NEEDED TO ENSURE PROPER DRAINAGE. THIS WORK IS SUBSIDIARY TO 603 SERIES PAY ITEMS.
9. ESTABLISH RIPRAP APRONS AND FORESLOPES AS SOON AS POSSIBLE AS PERMANENT EROSION CONTROL.
10. PLACE GEOTEXTILE, EROSION CONTROL, CLASS I (NON-WOVEN), UNDER ALL RIPRAP. GEOTEXTILE SHALL BE TRIMMED SO THAT IT IS NOT VISIBLE UPON PROJECT COMPLETION.
11. RIPRAP APRONS, INCLUDING EXCAVATION AND CLEARING AND GRUBBING, IS SUBSIDIARY TO 611 PAY ITEMS.
12. ALL CULVERTS TO BE 12 GAGE UNLESS NOTED OTHERWISE ON PLANS AND SPECIFICATIONS.
13. LOCATE AND PROTECT ALL EXISTING UTILITIES WITHIN PROJECT LIMITS PRIOR TO BEGINNING ANY GROUND DISTURBING WORK. ANY DAMAGE TO EXISTING UTILITIES SHALL BE REPAIRED AT CONTRACTORS EXPENSE.

1. RECONDITION DITCH TO DRAIN 50 FEET ON BOTH SIDES OF THE INLET AND OUTLET TO EACH CULVERT OR AS DIRECTED BY THE ENGINEER. THIS WORK IS SUBSIDIARY TO 602/603 PAY ITEMS.
2. THE CONTRACTOR SHALL ENTER AS-BUILT LOCATIONS FOR ALL CULVERTS IN THE CULVERT SUMMARY TABLE. COORDINATES SHALL BE LOCATED AT THE INTERSECTION OF THE CULVERT AND ROAD CENTERLINE. USE NAD 83 COORDINATE SYSTEM FORMATTED TO DECIMAL DEGREE TO A PRECISION OF 5 DECIMAL PLACES (DDD.DDDDD). THIS WORK IS SUBSIDIARY TO 602/603 SERIES PAY ITEMS.

NEW CULVERT TYPE LEGEND:

C = CORRUGATED STEEL
X = CROSS CULVERT
A = APPROACH CULVERT
F = FISH PASSAGE
G = GALVANIZED
R = PIPE ARCH

CULVERT SUMMARIES

STATE OF ALASKA 49TH GUANGYAN TU GRIFFIN CE 11229 REGISTERED PROFESSIONAL ENGINEER

Preliminary Plans

PLANS DEVELOPED BY: STATE OF ALASKA DEPARTMENT OF TRANSPORTATION & PUBLIC FACILITIES, NORTHERN REGION, 2301 PEGER ROAD, FAIRBANKS, AK 99709 (907)451-2200
R:\Projects\Parks_Hwy\00423_Parks_188_192_Resurfacing\6 Design\5 Civil 3D\00423_Summary_Details_Est-E1 CULVERT SUMMARIES Fri, Aug/28/20 04:55pm

NO.	DATE	REVISION

STATE	PROJECT DESIGNATION	YEAR	SHEET NO.	TOTAL SHEETS
ALASKA	NFHWY00423/PENDING	2020	E2	E8

CULVERT MARKER POSTS NOTES:

1. MARKER POSTS ARE TO BE INSTALLED ON CROSS CULVERTS ONLY.
2. IF CULVERTS ARE CLOSELY SPACED, MARK ONLY THE FIRST AND LAST CULVERT IN SERIES AS APPROVED BY THE ENGINEER.
3. DRILL ALL BOLT HOLES. COAT HOLES WITH ZINC RICH PAINT. FLAME CUTTING SHALL NOT BE PERMITTED.
4. GASKET MATERIAL SHALL BE PLACED BETWEEN DISSIMILAR METALS. GASKET MATERIAL SHALL BE APPROVED PRIOR TO INSTALLATION.

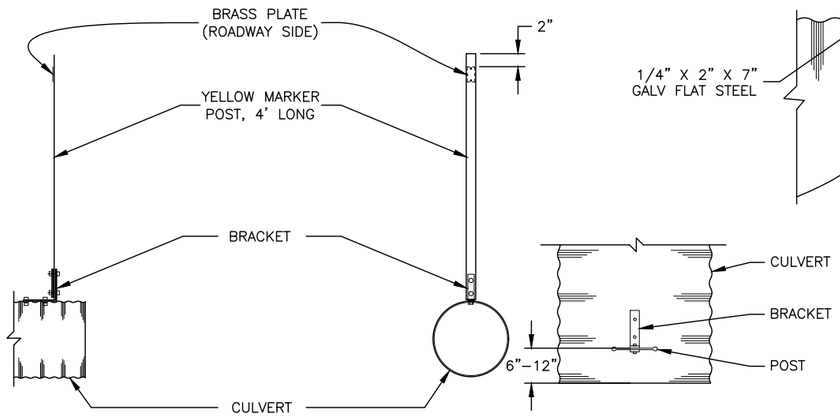

SIDE VIEW END VIEW TOP VIEW

CULVERT MARKER POST DETAIL

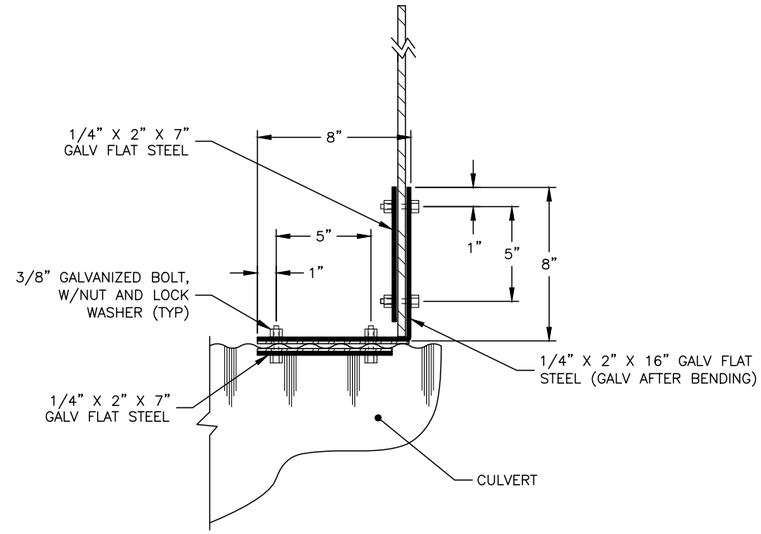

BRACKET DETAIL

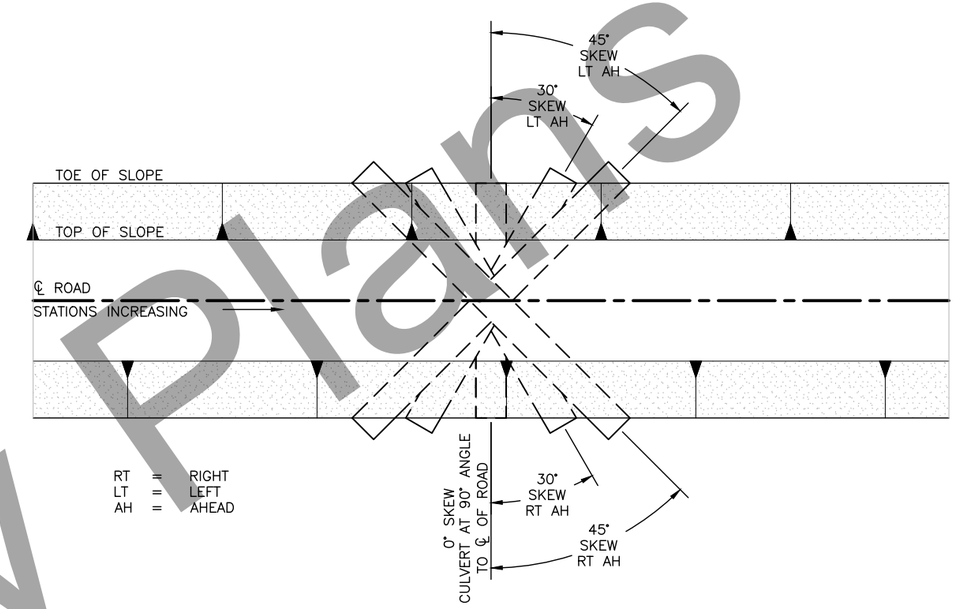

CULVERT SKEW

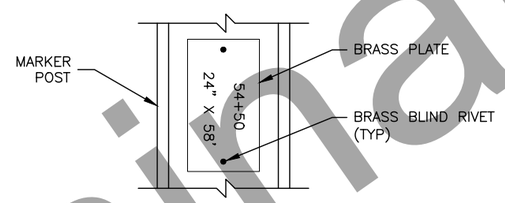

STAMP STATION AND PIPE SIZE, USING 3/8" HIGH MINIMUM LETTERS INTO A 2" X 4" X 0.064" THICK BRASS PLATE. FASTEN PLATE TO THE SIDE FACING THE ROADWAY WITH TWO 1/8" BRASS BLIND RIVETS.

BRASS PLATE DETAIL

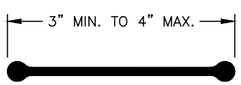

POST DETAIL

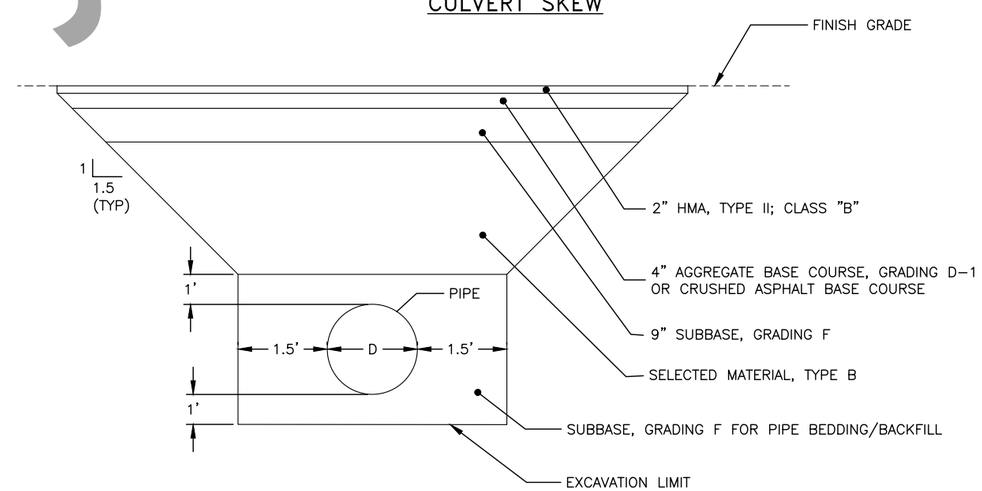

CULVERT BEDDING DETAIL
END VIEW

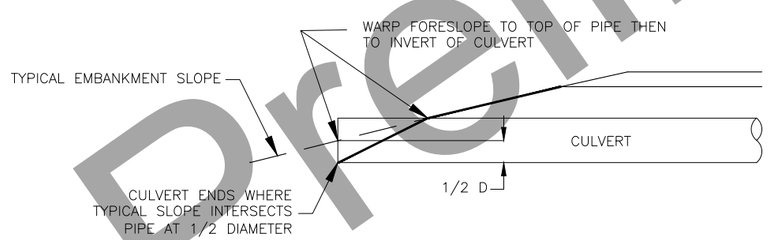

CULVERT SLOPE WARPING DETAIL
2:1 OR FLATTER FORESLOPES

CULVERT BEDDING NOTES:

1. INSTALL MATERIAL LAYERS AS SHOWN ON TYPICAL SECTIONS.
2. 18" SELECTED MATERIAL, TYPE A, AND SELECTED MATERIAL, TYPE B, LAYERS MAY BE OMITTED AS DIRECTED.

CULVERT DETAILS

STATE OF ALASKA 49TH
GUANGYAN TU GRIFFIN
CE 11229
REGISTERED PROFESSIONAL ENGINEER

Preliminary Plans

PLANS DEVELOPED BY: STATE OF ALASKA DEPARTMENT OF TRANSPORTATION & PUBLIC FACILITIES, NORTHERN REGION, 2301 PEGER ROAD, FAIRBANKS, AK 99709 (907)451-2200
R:\Projects\Parks_Hwy\00423_Parks_188_192_Resurfacing\6 Design\5 Civil 3D\00423_Summary_Details_Est-E2 CULVERT DETAILS Fri, Aug/28/20 04:55pm

NO.	DATE	REVISION

STATE	PROJECT DESIGNATION	YEAR	SHEET NO.	TOTAL SHEETS
ALASKA	NFHWY00423/PENDING	2020	E3	E8

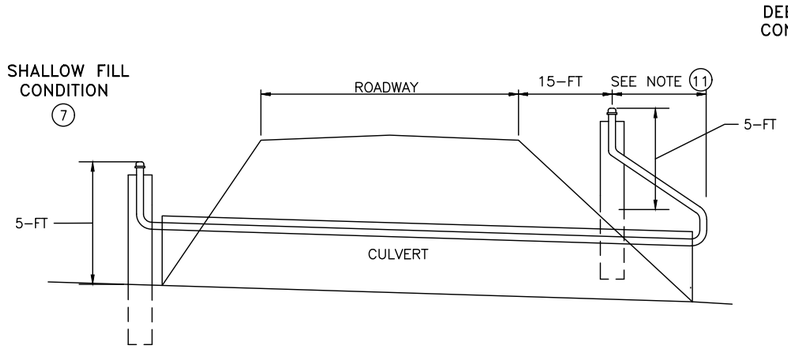

HIGHWAY SECTION VIEW

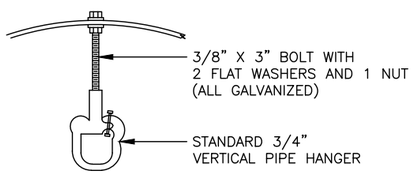

PIPE HANGER

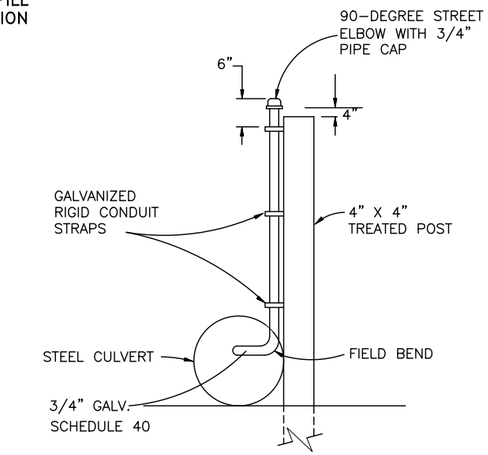

STAND PIPE

THAW PIPE DETAILS

NTS

THAW PIPE NOTES:

1. REFER TO THE CULVERT SUMMARY ON SHEET E1 FOR THAW PIPE LOCATIONS AND QUANTITIES.
2. WHEN CALLED FOR IN THE CULVERT SUMMARY, INSTALL TWO THAW PIPES IN MAIN CULVERT AT THE 4 AND 8 O'CLOCK POSITIONS. IN AN ARCH CULVERT, INSTALL THE THAW PIPES IN EACH OF THE BOTTOM BENDS. FOR EACH THAW PIPE RUN, INSTALL STANDARD RINGS OR STRAPS AS PIPE HANGERS, AT 4-FT INTERVALS ALONG INSIDE WALLS FOR ENTIRE CULVERT LENGTH TO RUN THAW PIPES THROUGH. THERE SHALL BE A PIPE HANGER LOCATED AT EACH CULVERT END, PLACED WITHIN 12-INCH OF END.
3. WHEN ONLY ONE THAW PIPE IS CALLED FOR IN THE CULVERT SUMMARY, SUSPEND IT FROM THE TOP USING HANGARS SPACED EVERY 12-INCHES.
4. DO NOT LOCATE THAW PIPE JOINTS OR COUPLINGS WITHIN 30 INCHES OF CULVERT ENDS.
5. THAW PIPES MUST BE WATER-TIGHT. SEAL ALL JOINTS WITH AN APPROVED SEALING COMPOUND, EXCEPT THE END CAPS.
6. THAW PIPES MUST BE BENT WITHOUT KINKS, 180° AROUND CULVERT ENDS FROM INSIDE TO OUTSIDE OF CULVERT WITH NO GREATER THAN 12-INCH RADIUS. FITTINGS MAY BEGIN ON OUTSIDE OF CULVERT AFTER COMING BACK AT LEAST 6 INCHES PAST CULVERT ENDS.
7. THE FILL CONDITION (I.E., "SHALLOW" OR "DEEP") WILL BE DETERMINED IN THE FIELD BY THE ENGINEER. GENERALLY, THE DEEP FILL CONDITION REQUIRES AN ADDITIONAL FIELD BEND OF THE THAW PIPE TO ALLOW MORE PIPE RUN FOR EASIER ACCESSIBILITY.
8. PRESSURE-TREATED SUPPORT POSTS MUST BE USED FOR EACH THAW PIPE STAND. WHERE TWO THAW PIPES ARE CALLED FOR, INSTALL BOTH ON ONE POST, AS APPROVED BY THE ENGINEER.
9. LENGTH OF TREATED SUPPORT POSTS ARE APPROXIMATELY 7.5 FEET. MINIMUM EMBEDMENT DEPTH IS 4 FEET.
10. THAW PIPES SHALL BE FASTENED TO POSTS WITH GALVANIZED RIGID CONDUIT STRAPS WITH GALVANIZED LAG SCREWS ON 1-FT CENTERS.
11. WHEN BEND RUN LENGTH EXCEEDS 5 FEET, AS APPROVED BY THE ENGINEER, A SECOND SUPPORT POST SHALL BE ADDED TO SUPPORT THE BEND RUN.
12. FILL ALL THAW PIPES WITH A MIX OF TINTED PROPYLENE GLYCOL ANTIFREEZE AND WATER TO PROTECT TO MINUS 50° F, THEN CAP THE PIPE.
13. LABOR AND MATERIALS REQUIRED TO INSTALL THE THAW PIPES AND SUPPORT POSTS SHOWN ON THIS DRAWING ARE PAID UNDER PAY ITEM 616(2). REMOVAL OF EXISTING THAW PIPES, SUPPORT POSTS, AND OTHER HARDWARE WILL NOT BE MEASURED FOR PAYMENT, BUT IS SUBSIDIARY TO PAY ITEM 616(2).

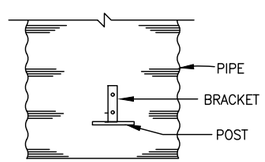

TOP VIEW

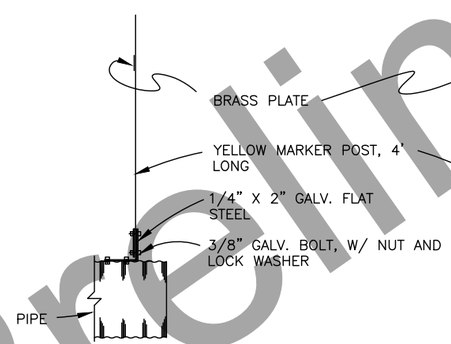

SIDE VIEW

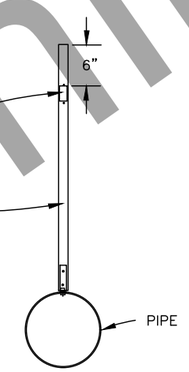

END VIEW

CULVERT MARKER POST DETAILS

NTS

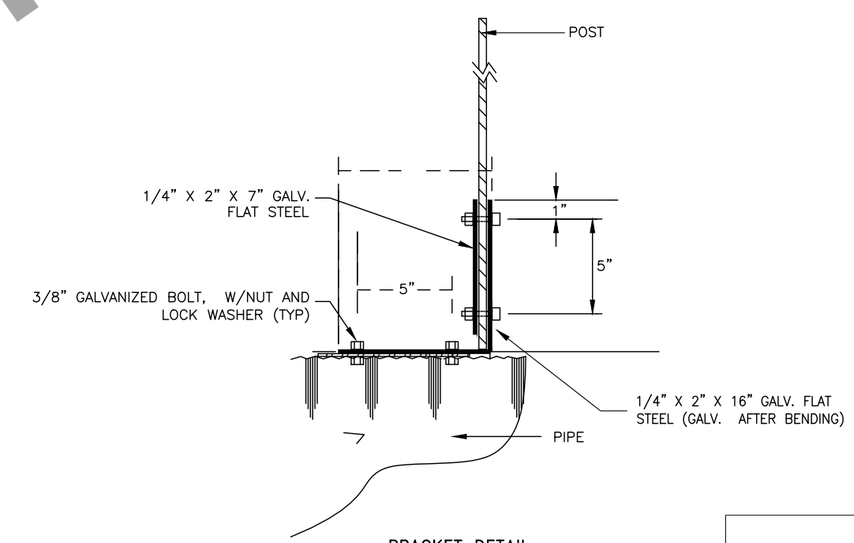

BRACKET DETAIL

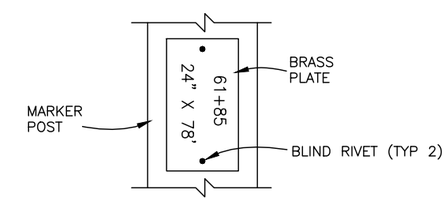

STAMP AS-BUILT STATION, LENGTH, AND DIAMETER OF PIPE AS SHOWN, USING 3/8" HIGH MINIMUM LETTERS INTO A 2"x4"x0.064" THICK BRASS PLATE. FASTEN PLATE TO THE SIDE FACING TRAFFIC WITH TWO 1/8" DIA. BLIND RIVETS.

BRASS PLATE DETAIL

THAW PIPE DETAIL

STATE OF ALASKA 49TH
GUANGYAN TU GRIFFIN
CE 11229
REGISTERED PROFESSIONAL ENGINEER

Preliminary Plans

PLANS DEVELOPED BY: STATE OF ALASKA DEPARTMENT OF TRANSPORTATION & PUBLIC FACILITIES, NORTHERN REGION, 2301 PEGER ROAD, FAIRBANKS, AK 99709 (907)451-2200
R:\Projects\Parks_Hwy\00423_Parks_188_192_Resurfacing\6 Design\5 Civil 3D\00423_A_TITLE-E3 CULVERT DETAILS (ALT might take out) Fri, Aug/28/20 04:55pm

NO.	DATE	REVISION

STATE	PROJECT DESIGNATION	YEAR	SHEET NO.	TOTAL SHEETS
ALASKA	NFHWY00423/PENDING	2020	E4	E8

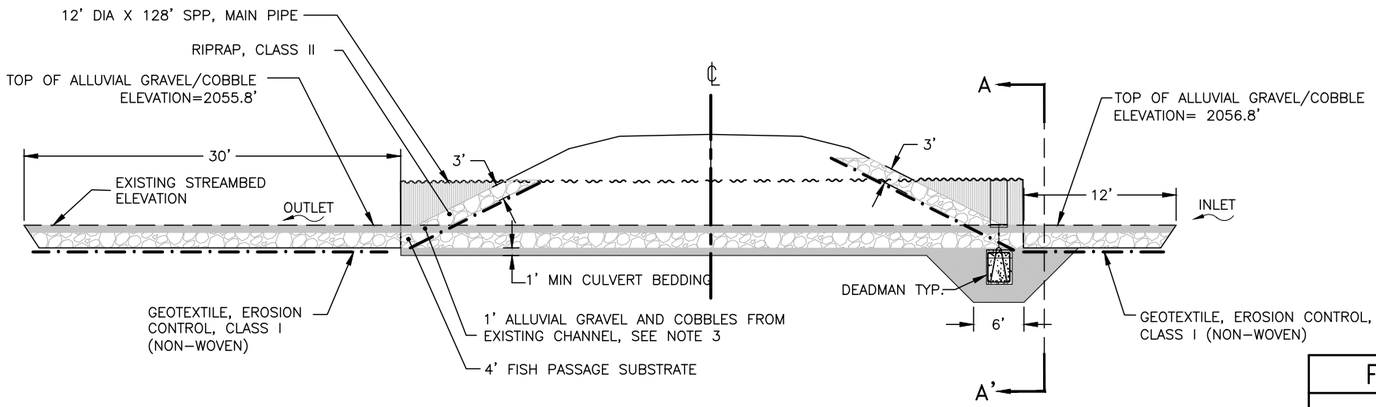

SECTION B–B'

HYDROLOGIC & HYDRAULIC SUMMARY

PARKS HWY MILE 190.2 – STATION 1354+00 – DISASTER CREEK

BASIN AREA (SQ. MI)	QFISH (CFS)	Q2 (CFS)	Q5 (CFS)	Q50 (CFS)	Q100 (CFS)
6.3	31.4	112	194	430	511
HEADWATER ELEVATION @Q50 IS 1524.4 FT, @Q100 IS 1524.9 FT					
HW/D @ 1= 900 CFS, ROAD OVERTOPS AT APPROXIMATELY 1529 CFS					
CULVERT PURPOSE: CROSS DRAINAGE/ FISH PASSAGE					

FISH PASSAGE CULVERT SUMMARY MILE 190.2 – 4TH OF JULY

DESCRIPTION	MATERIAL	LOCATION	DIAMETER (IN)	LENGTH (FT)	SKEW	ELEVATIONS (FT) INLET INVERT	ELEVATIONS (FT) OUTLET INVERT
MAIN PIPE	8 GAGE SPP	1352+68	144"	128	0 DEG.	2053.06	2051.79
FLANKER	12 GAGE CSP	1352+82	48"	123	0 DEG.	2053.77	2052.82

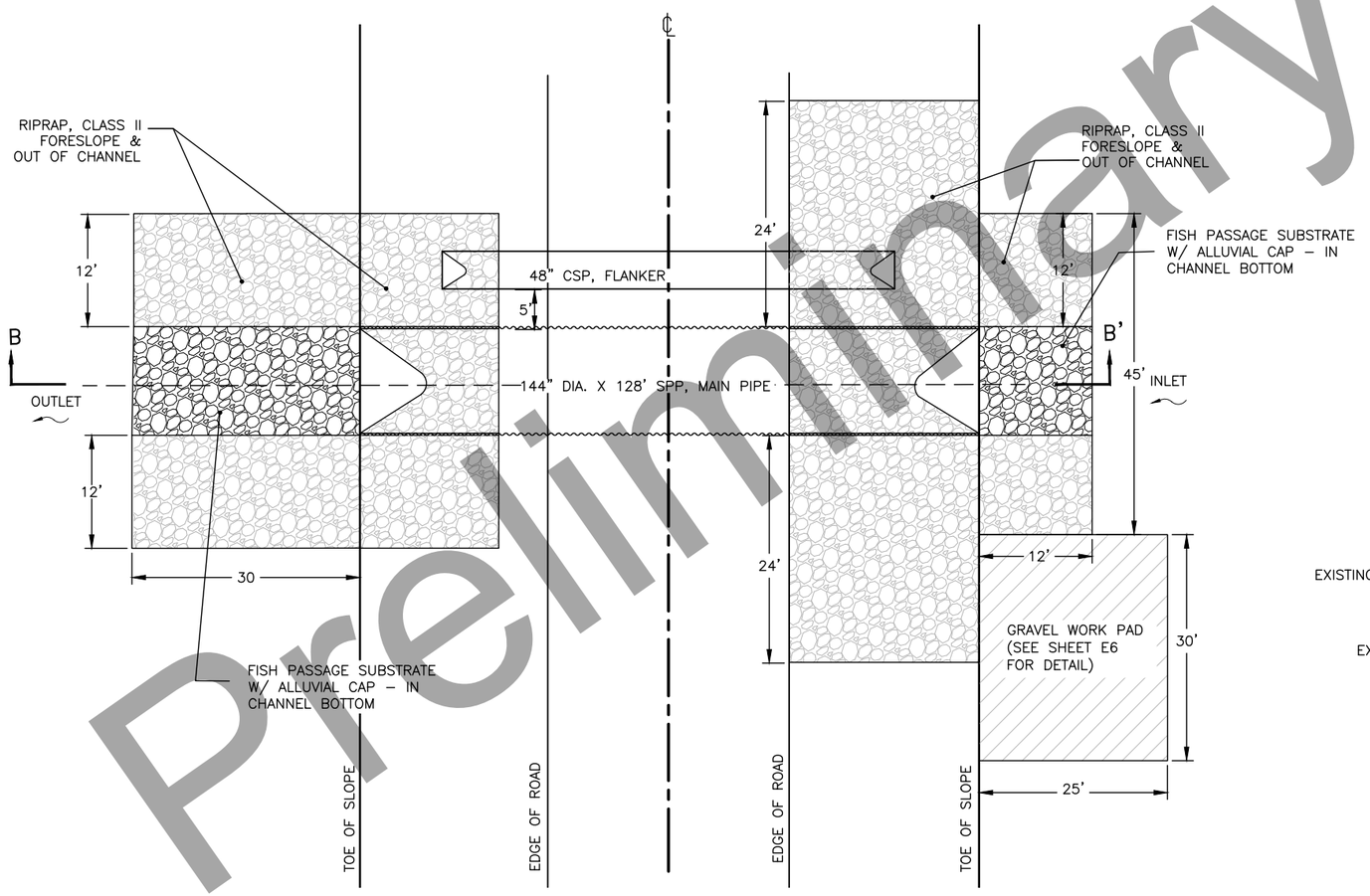

CULVERT APRON AND WORK PAD PLAN VIEW

NOTES:

1. THIS CULVERT WAS DESIGNED TO PROVIDE FISH PASSAGE.
2. SEE GENERAL AND FISH PASSAGE CULVERT NOTES ON SHEET E5.
3. INSTALL 1' ALLUVIAL GRAVEL AND COBBLES FROM EXISTING CHANNEL ON THE TOP OF 4 FT FISH PASSAGE SUBSTRATE WITHIN THE CULVERT. SEE SPECIAL PROVISION 628.
4. INSTALL A 144" SPP DEPRESSED 5 FEET INTO THE CHANNEL BOTTOM.

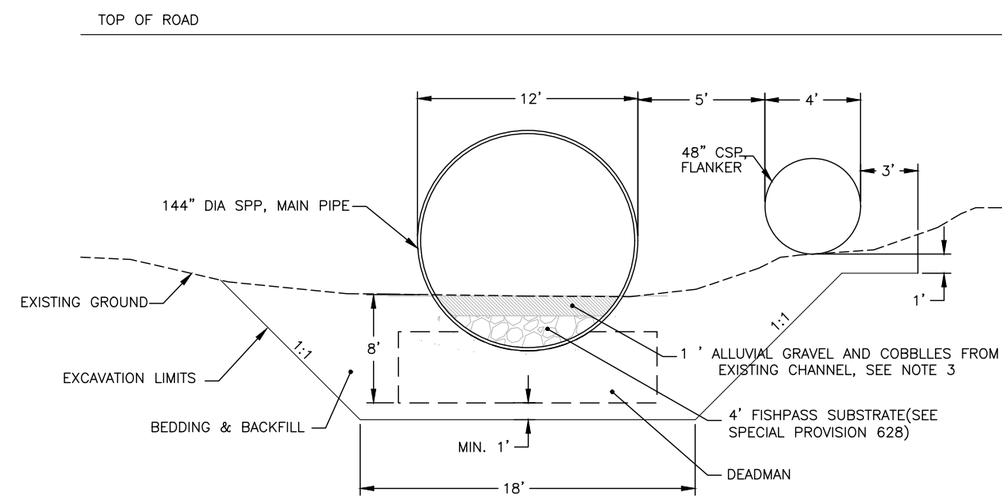

SECTION A–A'

FOURTH OF JULY CREEK

STATE OF ALASKA 49TH
Luke J. Boles
CE 11520
REGISTERED PROFESSIONAL ENGINEER

Preliminary Plans

PLANS DEVELOPED BY: STATE OF ALASKA DEPARTMENT OF TRANSPORTATION & PUBLIC FACILITIES, NORTHERN REGION, 2301 PEGER ROAD, FAIRBANKS, AK 99709 (907)451-2200
R:\Projects\Parks_Hwy\00423_Parks_188_192_Resurfacing\6 Design\5 Civil 3D\00423_4th of July Creek Culvert & Riprap Details-E4 – FOURTH OF JULY CREEK Fri, Aug/28/20 04:55pm

NO.	DATE	REVISION

STATE	PROJECT DESIGNATION	YEAR	SHEET NO.	TOTAL SHEETS
ALASKA	NFHWY00423/PENDING	2020	E5	E8

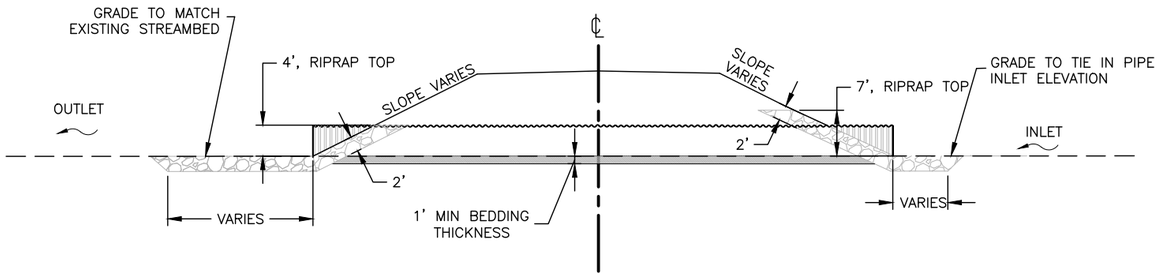

TYPICAL 48" CSP RIPRAP APRONS PROFILE VIEW

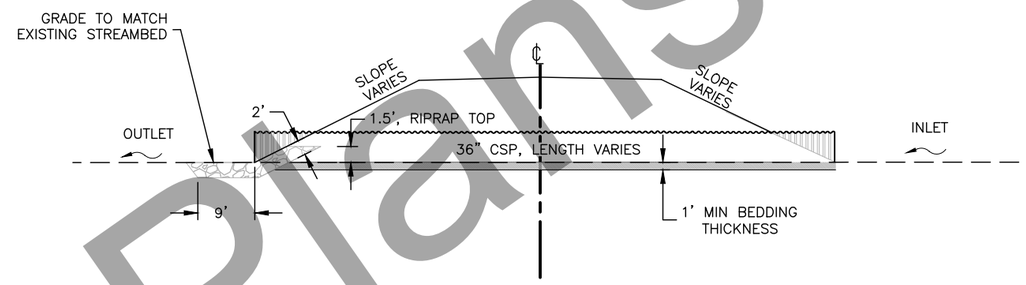

TYPICAL 36" CSP RIPRAP APRONS PROFILE VIEW

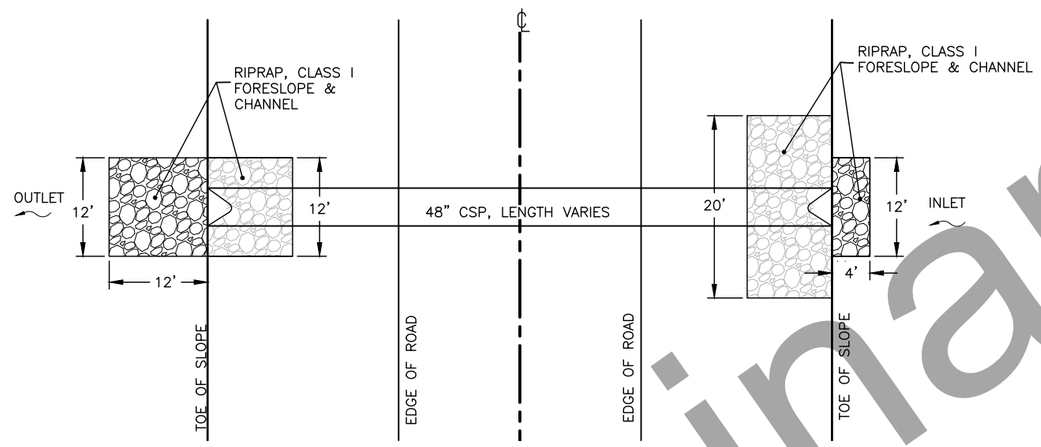

TYPICAL 48" CSP RIPRAP APRON PLAN VIEW*

* EXCEPT FOR DOUBLE 48" CSP @MP 188.6

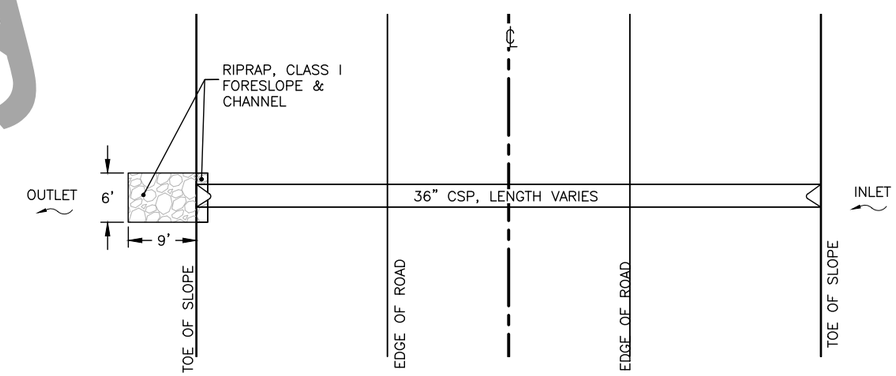

TYPICAL 36" CSP RIPRAP APRON PLAN VIEW

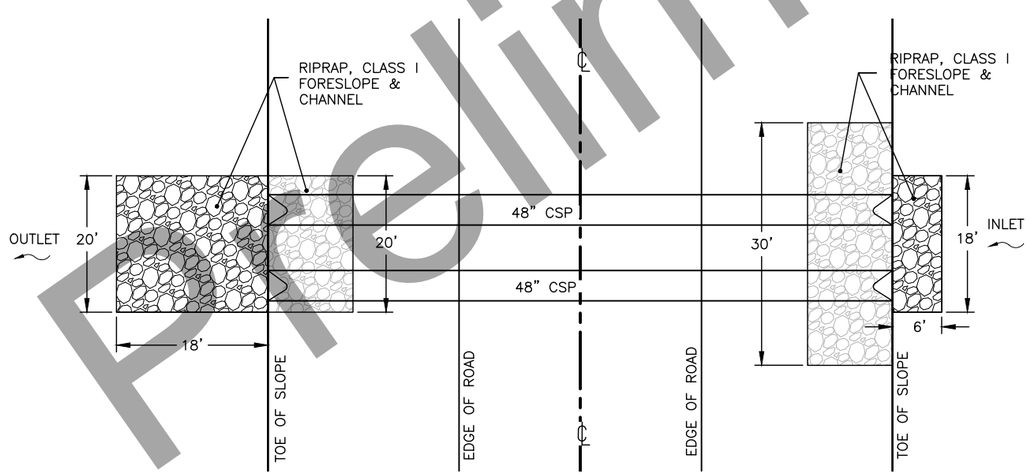

DOUBLE 48" CSP @MP 188.6 RIPRAP APRON PLAN VIEW

NOTES:

1. EROSION CONTROL STRUCTURES MAY BE FIELD ADJUSTED BY THE ENGINEER TO TAKE ADVANTAGE OF EXISTING CHANNEL FEATURES.
2. CULVERT DETAILS SHOWN ON THIS SHEET ARE SCHEMATIC AND NOT TO SCALE.
3. EXCAVATE BELOW EXISTING GROUND WHERE RIPRAP IS REQUIRED AND BACKFILL WITH SPECIFIED DEPTH AND RIPRAP AS SHOWN; THIS WORK IS SUBSIDIARY TO 611 PAY ITEM. THE TOP OF RIPRAP SHALL BE FLUSH WITH THE ADJACENT DITCH, SLOPE, OR GROUND SURFACE.
4. TRANSITION THE EMBANKMENT WARP FROM THE CULVERT INVERT TO THE NORMAL EMBANKMENT FORESLOPE CATCH OVER A DISTANCE OF 4D LEFT AND RIGHT OF EACH CULVERT OPENING.
5. SHAPE APRON INLET AND OUTLET CHANNELS BY CREATING U OR V-SHAPED TO MATCH EXISTING DRAINAGE PATH. THIS WORK IS SUBSIDIARY TO 611 PAY ITEM.

STATE OF ALASKA 49TH
GUANGYAN TU GRIFFIN
CE 11229
REGISTERED PROFESSIONAL ENGINEER

CULVERT RIPRAP DETAILS

Preliminary Plans

PLANS DEVELOPED BY: STATE OF ALASKA DEPARTMENT OF TRANSPORTATION & PUBLIC FACILITIES, NORTHERN REGION, 2301 PEGER ROAD, FAIRBANKS, AK 99709 (907)451-2200
R:\Projects\Parks_Hwy\00423_Parks_188_192_Resurfacing\6 Design\5 Civil 3D\00423_4th of July Creek Culvert & Riprap Details-E5 Fri, Aug/28/20 04:55pm

NO.	DATE	REVISION

STATE	PROJECT DESIGNATION	YEAR	SHEET NO.	TOTAL SHEETS
ALASKA	NFHWY00423/PENDING	2020	E6	E8

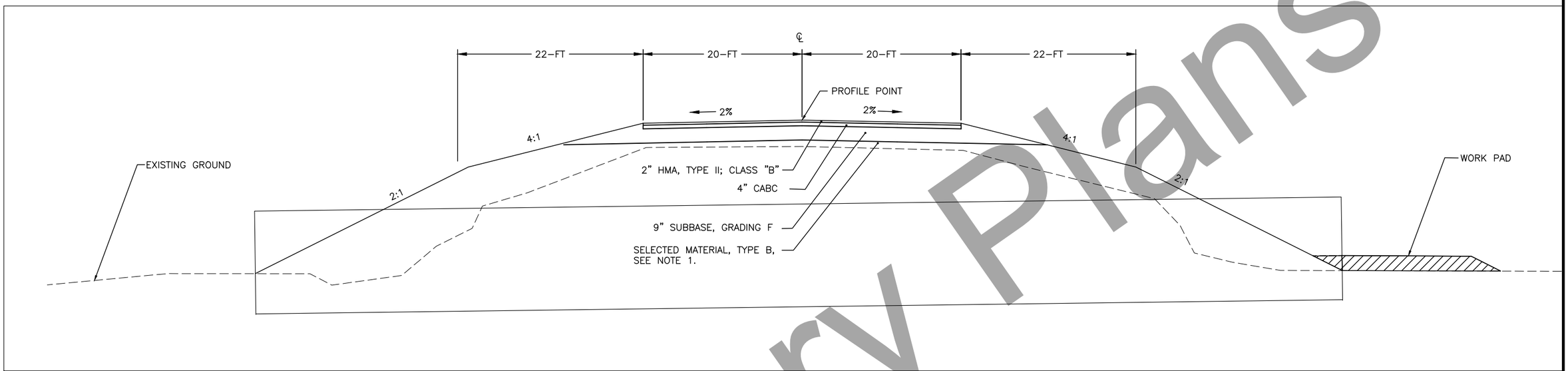

MP 190.3 TYPICAL SECTION

STATION 1352+00 TO STATION 1353+00

NOTES:

1. DETAILS SHOWN ON THIS SHEET ARE SCHEMATIC AND NOT TO SCALE. RIPRAP PLACEMENT DETAILS ARE NOT SHOWN.
2. WORK PAD WILL BE BUILT WITH 18" SUBBASE, GRADING F MATERIAL. SEE SHEET E4 FOR MORE DETAIL.

Preliminary Plans

FOURTH OF JULY CREEK
EMBANKMENT DETAILS

STATE OF ALASKA 49TH
GUANGYAN TU GRIFFIN
CE 11229
REGISTERED PROFESSIONAL ENGINEER

PLANS DEVELOPED BY: STATE OF ALASKA DEPARTMENT OF TRANSPORTATION & PUBLIC FACILITIES, NORTHERN REGION, 2301 PEGER ROAD, FAIRBANKS, AK 99709 (907)451-2200
R:\Projects\Parks_Hwy\00423_Parks_188_192_Resurfacing\6 Design\5 Civil 3D\00423_4th of July Creek Culvert & Riprap Details-E6 - RIPRAP APRON DETAILS Fri, Aug/28/20 04:55pm

NO.	DATE	REVISION

STATE	PROJECT DESIGNATION	YEAR	SHEET NO.	TOTAL SHEETS
ALASKA	NFHWY00423/PENDING	2020	E7	E8

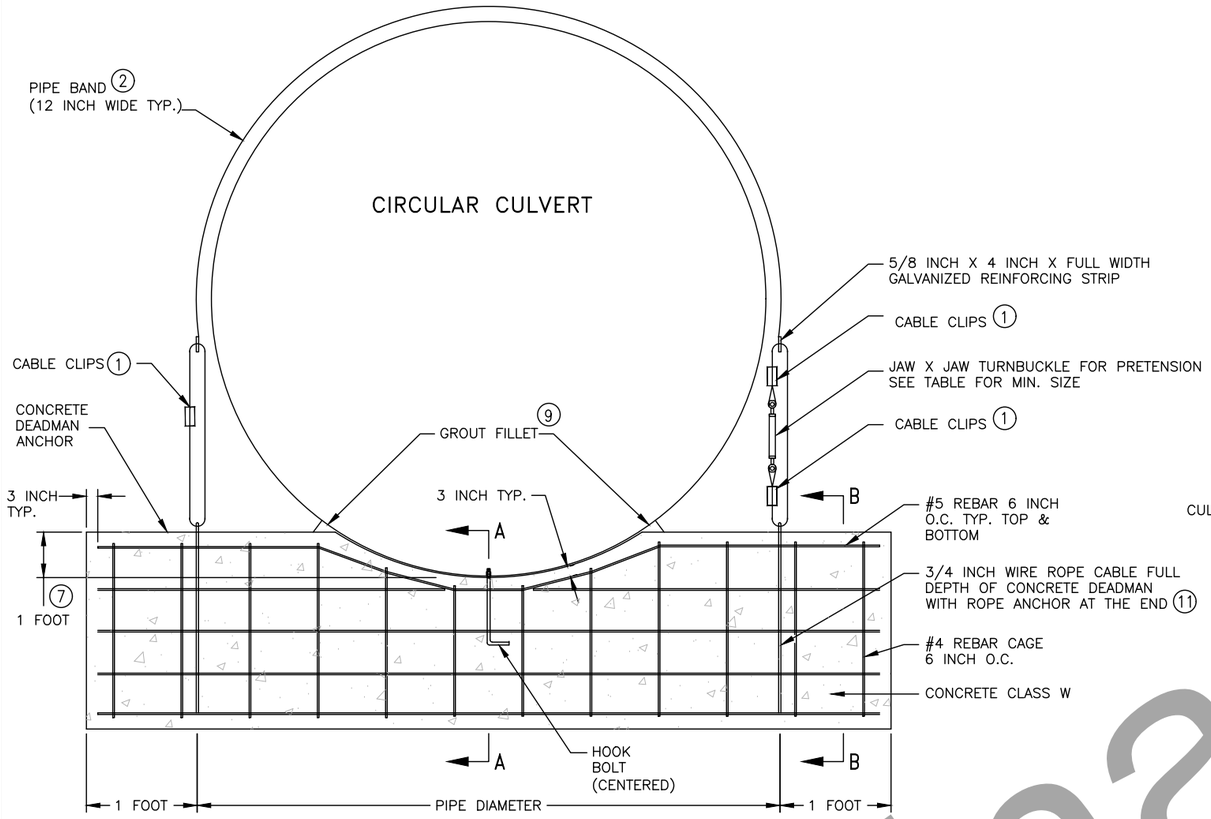

DEADMAN DETAIL

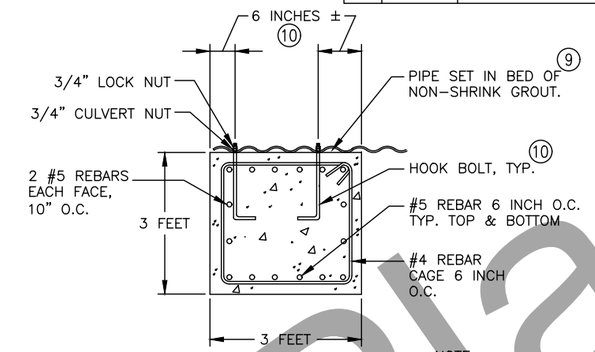

SECTION A-A

NOTE:
REBAR SIZES ARE MINIMUMS.

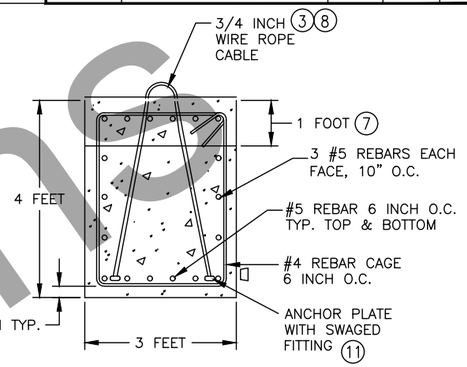

SECTION B-B

CONCRETE DEADMAN ANCHOR DETAILS

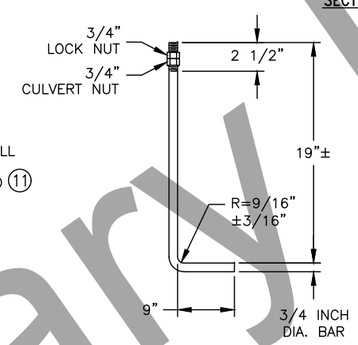

HOOK BOLT (4)

NOTES:

(1) IF DROP FORGED U-BOLT TYPE CLIPS ARE USED, THEY SHOULD BE INSTALLED USING THE FOLLOWING:

AMT. WIRE ROPE TO TURN BACK OR SPLICE SEE TABLE.
TORQUE REQUIRED TO REACH HOLDING POWER SEE TABLE.
SPACING: DIAMETER OF THE ROPE (INCHES) TIMES 6. THE BASE OF THE CLAMPS AND NUTS MUST BE ON THE LIVE END OF THE WIRE INSTALL THIMBLE.

(2) THE LENGTH OF THE PIPE BANDS SHALL BE A MINIMUM OF HALF THE CIRCUMFERENCE OF THE ROUND CULVERT OR SHALL EXTEND TO WITHIN 6" OF THE SPRINGLINE ON PIPE ARCH CULVERT. THE PIPE BANDS SHALL BE A MINIMUM THICKNESS OF 1/16" GALVANIZED ASTM A1011 SS GRADE 36 OR MINIMUM THICKNESS 0.109" GALVANIZED AASHTO M218. THE REINFORCING STRIP SHALL BE GALVANIZED ASTM A36.

(3) WIRE ROPE SHALL BE 6X19 IWRC, EIPS & GALVANIZED AND MEET AASHTO M30 TYPE II REQUIREMENTS OR APPROVED EQUAL.

(4) ALL HARDWARE SHALL BE GALVANIZED TO MEET AASHTO M232

(5) CLASS W CONCRETE SHALL BE USED TO CONSTRUCT THE CONCRETE DEADMAN ANCHOR. REINFORCEMENT SHALL BE ASTM A615 GRADE 40.

(6) ALL WORK AND MATERIALS REQUIRED FOR THE CONSTRUCTION AND INSTALLATION OF THE DEADMAN SHALL NOT BE MEASURED OR PAID FOR DIRECTLY, BUT SHALL BE CONSIDERED SUBSIDIARY TO OTHER ITEMS.

(7) CONCRETE DEADMAN SHALL BE CAST TO CONFORM TO THE OUTER RADIUS OF THE CULVERT.

(8) USE A SPREADER BEAM/BAR WHEN LIFTING DEADMAN TO AVOID BENDING OF TIE-DOWN/LIFTING LOOP.

(9) THE PIPE SHALL BE SET IN A BED OF NON-SHRINK GROUT OF SUFFICIENT THICKNESS TO FULLY FILL THE CORRUGATIONS AFTER TENSIONING OF THE ANCHOR BOLTS AND TIE-DOWN BAND. THE DEADMAN SURFACE SHALL BE PROPERLY PREPARED FOR BEST BONDING WITH GROUT – CLEAN, DUST FREE, SATURATED SURFACE DRY (SSD) CONDITION. BOTTOM OF PIPE SHALL BE AS CLEAN AND DUST FREE AS PRACTICABLE. GROUT SHALL BE FILLETED/CROWNED ALONG SIDES OF PIPE AT THE DEADMAN/PIPE SEAM IN ORDER TO REDUCE WATER INFILTRATION INTO THE GROUTED AREA.

(10) PENETRATE CULVERT INVERT HOOK BOLTS IN A CORRUGATION VALLEY TO PROTECT NUT. ANCHOR BOLT HOLES SHALL BE DRILLED, NOT CUT WITH A TORCH, AND COATED WITH APPROPRIATE ZINC RICH PAINT PRIOR TO INSTALLATION. AFTER INSTLLATION AND ANCHOR BOLT NUTS HAVE BEEN TIGHTENED, COAT THE ANCHOR BOLT AND SURROUNDING AREA WITH ZINC RICH PAINT.

(11) SEE STANDARD DRAWING G-00.04 SHEET 4 FOR ROPE ANCHOR DETAILS.

TABLE 1: MINIMUM HARDWARE SIZE

CULVERT DIA./SPAN (FT)	WIRE ROPE DIA. (IN)	TURNBUCKLE DIA. (IN)	MINIMUM WIRE ROPE TUNRBACK/SPLICE (IN)	U-BOLT NUT TORQUE (FT-LB)
2.00 TO 6.00	5/16	7/8	5 1/2	30
6.01 TO 10.00	3/8	1	6 1/4	45
10.01 TO 16.00	7/16	1 1/4	7	65
16.01 TO 19.99	1/2	1 1/2	11	65

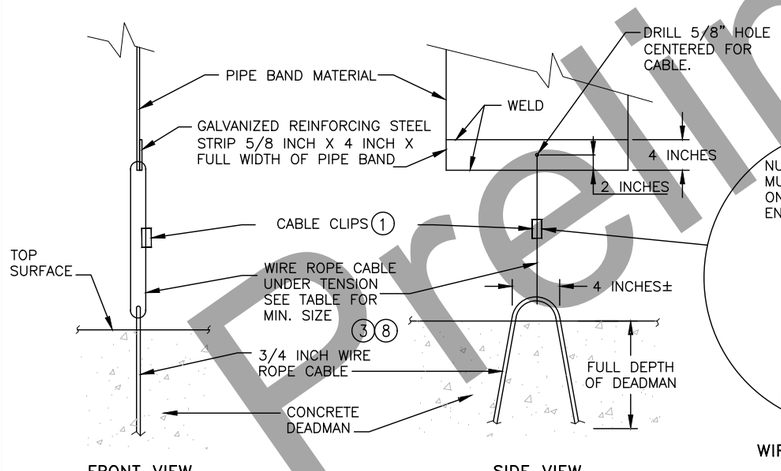

PIPE BAND DETAILS

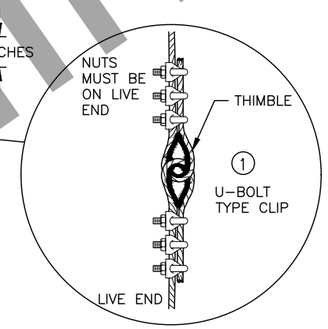

WIRE ROPE CLAMPS

ENLARGED VIEW

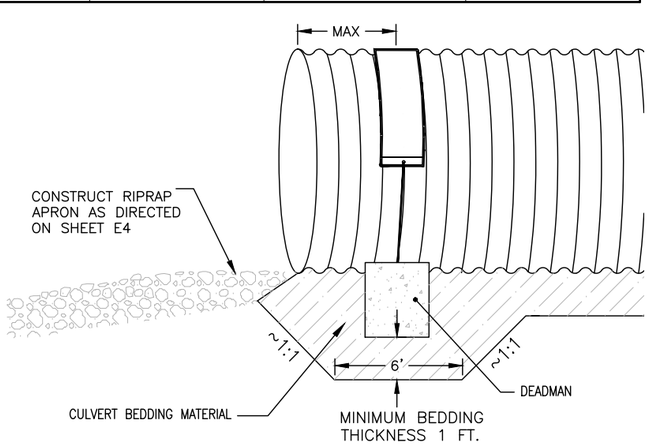

DEADMAN CULVERT DETAILS

STATE OF ALASKA 49TH
Luke J. Boles
CE 11520
REGISTERED PROFESSIONAL ENGINEER

Preliminary Plans

PLANS DEVELOPED BY: STATE OF ALASKA DEPARTMENT OF TRANSPORTATION & PUBLIC FACILITIES, NORTHERN REGION, 2301 PEGER ROAD, FAIRBANKS, AK 99709 (907)451-2200
R:\Projects\Parks_Hwy\00423_Parks_188_192_Resurfacing\6 Design\5 Civil 3D\00423_Deadman_Culvert_Details-E6 DEADMAN CULVERT DETAILS Fri, Aug/28/20 04:55pm

NO.	DATE	REVISION

STATE	PROJECT DESIGNATION	YEAR	SHEET NO.	TOTAL SHEETS
ALASKA	NFHWY00423/PENDING	2020	E8	E8

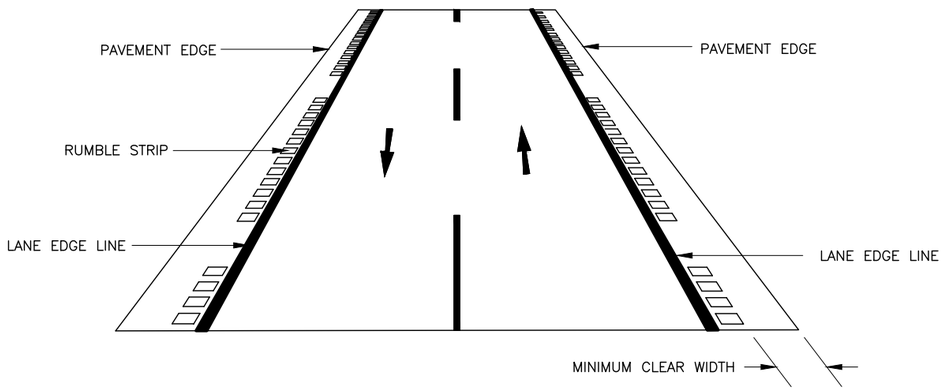

TYPICAL SHOULDER INSTALLATION – TWO–WAY

PERSPECTIVE VIEW

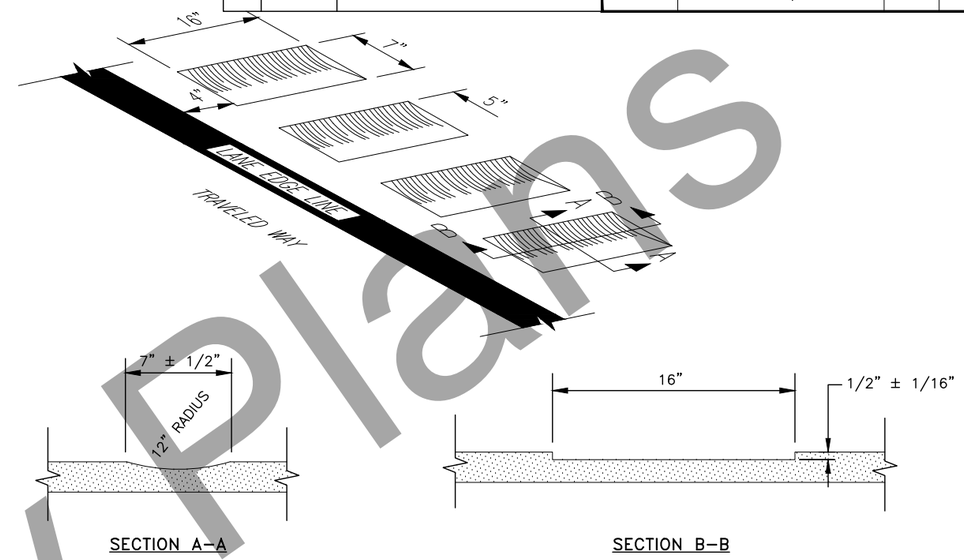

TYPICAL SHOULDER INSTALLATION DETAIL

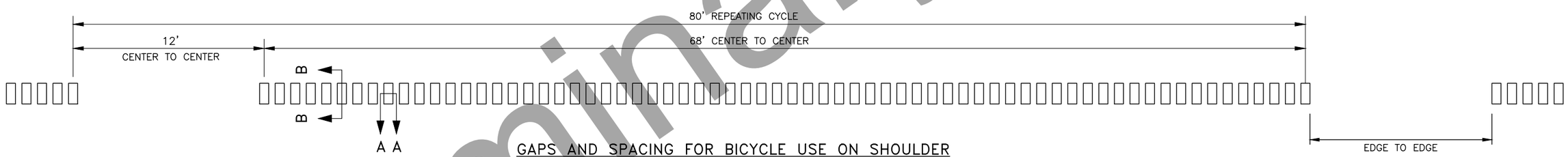

GAPS AND SPACING FOR BICYCLE USE ON SHOULDER

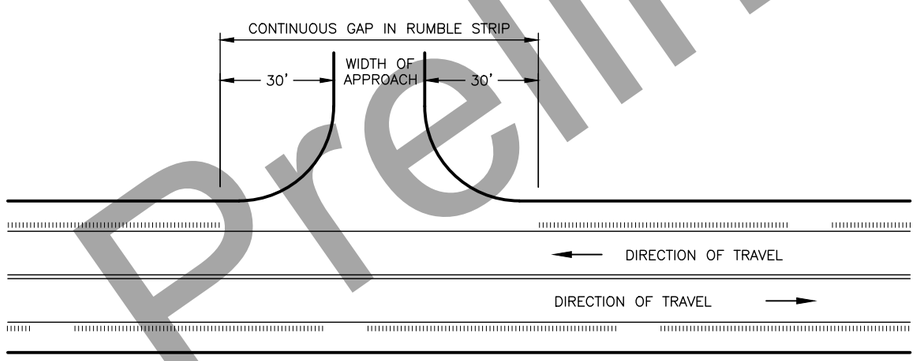

RUMBLE STRIP LAYOUT AT APPROACHES

SHOULDER RUMBLE STRIP NOTES:

1. USE CENTERLINE OR LANE LINE DIVIDING LINES, RATHER THAN LANE EDGE LINES, FOR RUMBLE STRIP ALIGNMENT CONTROL WHENEVER POSSIBLE.

STRIPING NOTES:

1. TRAFFIC MARKINGS SHALL BE PLACED ACCORDING TO STANDARD DRAWING T–21.03.
2. CENTERLINE MARKINGS SHALL BE LAID OUT ACCORDING TO SUBSECTION 670–3.05.
3. A 10/30 STRIPE/SKIP RATIO SHALL BE USED FOR THIS PROJECT.
4. IF NEW AND EXISTING LONGITUDINAL MARKINGS ARE NOT ALIGNED AT THE MATCH LINE, TRANSITION BETWEEN THE TWO USING A 100:1 TAPER.

RUMBLE STRIP DETAILS

STATE OF ALASKA 49TH
GUANGYAN TU GRIFFIN
CE 11229
REGISTERED PROFESSIONAL ENGINEER

Preliminary Plans

PLANS DEVELOPED BY: STATE OF ALASKA DEPARTMENT OF TRANSPORTATION & PUBLIC FACILITIES, NORTHERN REGION, 2301 PEGER ROAD, FAIRBANKS, AK 99709 (907)451–2200
R:\Projects\Parks_Hwy\00423_Parks_188_192_Resurfacing\6 Design\5 Civil 3D\00423_A_TITLE–E7 RUMBLE STRIP DETAILS Fri, Aug/28/20 04:55pm

NO.	DATE	REVISION

STATE	PROJECT DESIGNATION	YEAR	SHEET NO.	TOTAL SHEETS
ALASKA	NFHWY00423/PENDING	2020	G1	G1

639(3) APPROACH SUMMARY

APPROACH	CENTERLINE STATION	LT	RT	WIDTH (FT)	RADIUS LT (FT)	RADIUS RT (FT)	LENGTH (FT)
1	1266+86		X	30	30	20	30
2	1267+27	X		30	20	20	25
3	1271+22		X	30	15	30	30
4	1332+74	X		15	15	15	25
5	1333+62	X		15	15	15	25
6	1345+61	X		25	15	15	25
7	1360+01		X	15	30	10	25
8	1361+34		X	20	10	15	25
9	1398+27	X		450	40	40	50

APPROACH NOTES:

1. ALL STATIONING AND DIMENSIONS ARE APPROXIMATE AND SUBJECT TO MINOR REVISIONS IN THE FIELD.
2. LOCATE AND PROTECT ALL EXISTING UTILITIES WITHIN PROJECT LIMITS PRIOR TO BEGINNING ANY GROUND DISTURBING WORK. ANY DAMAGE TO EXISTING UTILITIES SHALL BE REPAIRED AT CONTRACTORS EXPENSE.
3. EXCAVATION REQUIRED TO BUILD TRANSITIONS IS SUBSIDIARY.
4. RECLAIM EXISTING APPROACH PAVEMENT AND RECONSTRUCT APPROACHES TO EXISTING SLOPES OR AS DIRECTED BY ENGINEER.
5. FIELD FIT APPROACHES AT STA 1360+01 RT AND STA 1361+34 RT AS APPROVED BY THE ENGINEER.
6. MATCH EXISTING TURNOUT APPROACH DIMENSIONS TO THE EXTENT POSSIBLE.

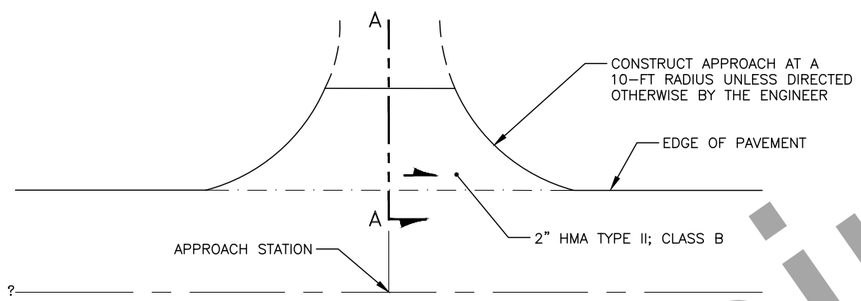

TYPICAL APPROACH DETAIL
NTS

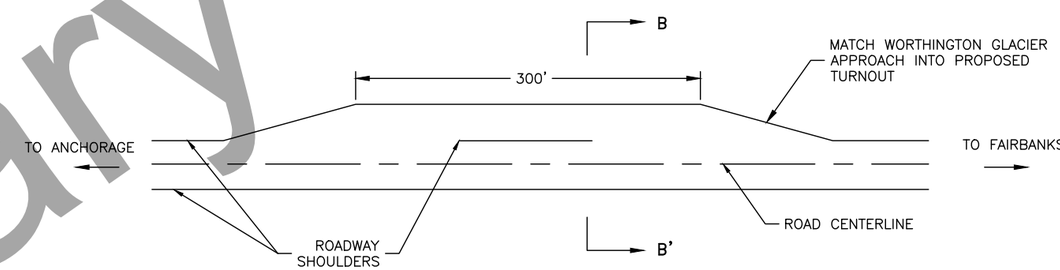

TURNOUT PLAN
NTS

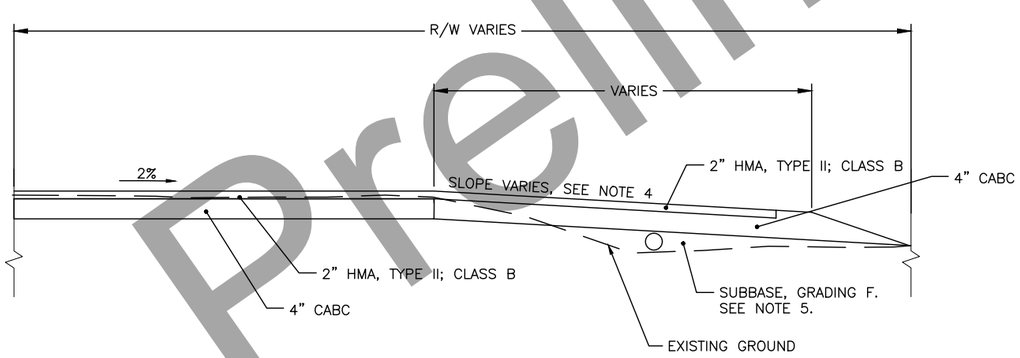

SECTION A-A TRANSITION DETAIL
NTS

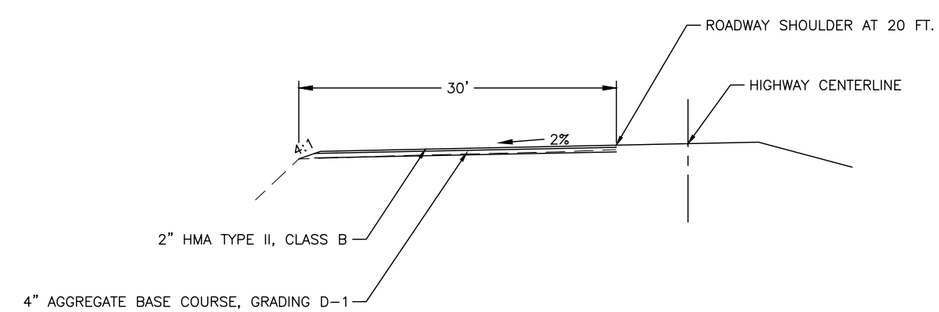

TURNOUT SECTION B-B'
NTS

APPROACH DETAILS

STATE OF ALASKA 49TH
GUANGYAN TU GRIFFIN
CE 11229
REGISTERED PROFESSIONAL ENGINEER

Preliminary Plans

PLANS DEVELOPED BY: STATE OF ALASKA DEPARTMENT OF TRANSPORTATION & PUBLIC FACILITIES, NORTHERN REGION, 2301 PEGER ROAD, FAIRBANKS, AK 99709 (907)451-2200
R:\Projects\Parks_Hwy\00423_Parks_188_192_Resurfacing\6 Design\5 Civil 3D\00423_Summary_Details_est-G1 APPROACH DETAILS Fri, Aug/28/20 04:5pm

NO.	DATE	REVISION

STATE	PROJECT DESIGNATION	YEAR	SHEET NO.	TOTAL SHEETS
ALASKA	NFHWY00423/PENDING	2020	H1	H1

SIGNING SUMMARY

LOC. NO.	STATION	LOCATION LT.	LOCATION RT.	ASDS CODE	LEGEND	SIZE H X V (INCHES)	BRACING/ FRAMING BRACED	BRACING/ FRAMING FRAMED	AREA (SQ.FT.)	MTG. HGT. (FT.)	DIR.	POST TYPE	POST SIZE (INCHES)	POST NO.	REMARKS
1	1231+17.51		38.95	010.03	MILE 188	14 X 36			3.50		5	PST	2.5	1	POSSIBLE OUT PROJECT
2	1285+12.58		37.38	010-103	MILE 189	14 X 36			3.50		5	PST	2.5	1	
3	1335+57.61		44.68	010-103	MILE 190	14 X 36			3.50		5	PST	2.5	1	
4	1336+24.06		33.51						3.50						PROTECT IN PLACE?
5	1381+35.19	34.02									5	PST	2.5	1	
6	1381+71.79		32.38		P 1500 FT										REPLACE
7	1389+93.17		38.09	010-103	MILE 191	14 X 36			3.50		5	PST	2.5	1	
8	1442+51.63		34.70	010-103	MILE 192	14 X 36			3.50		5	PST	2.5	1	POSSIBLE OUT OF PROJECT
								SUBTOTAL =	21.00						

NOTES:

1. REMOVE AND DISPOSE OF ALL EXISTING SIGNS AND SIGN FOUNDATIONS WITHIN THE PROJECT LIMITS, EXCEPT THOSE DESIGNATED FOR REINSTALLATION, SALVAGE OR OTHERWISE NOTED.
2. INSTALL MILEPOST SIGNS (D10 SERIES) IN ACCORDANCE WITH STANDARD DRAWING S-05.01, EXCEPT WITH A 15 TO 30 FOOT OFFSET. REDUCE THE OFFSET AS NECESSARY SO THE BOTTOM OF THE SIGN IS NO MORE THAN 15 FEET ABOVE THE GROUND. THE SIGN OFFSET SHALL NOT BE LESS THAN THE OFFSETS SHOWN IN S-05.01.
3. MOUNTING HEIGHTS ARE PER STANDARD DRAWING S-05.01 UNLESS OTHERWISE NOTED.
4. DETERMINE POST LENGTHS IN THE FIELD. DO NOT EXTEND POSTS ABOVE TOP OF SIGN.
5. INSTALL PST SIGN POSTS WITH SLEEVE TYPE CONCRETE FOUNDATION PER STANDARD DRAWING S-30.04. ATTACH THE SIGN POST TO THE SLEEVE USING GALVANIZED 3/8" BOLT, NUT, SPLIT LOCK WASHER AND TWO FLAT WASHERS.
6. INSTALL "TUBE POST SIGN BRACING" AS SHOWN ON STANDARD DRAWING S-01.01 ON ALL SIGNS MOUNTED ON A SINGLE PST POST AND HAVING A HORIZONTAL DIMENSION OF 30 INCHES OR GREATER, EXCEPT D3-100 SERIES SIGNS. INSTALL GALVANIZED SPLIT LOCK WASHERS ON ALL 3/8" BOLTS. STAINLESS STEEL FASTENER HARDWARE MAY BE USED INSTEAD OF GALVANIZED. 1/4" X 1 1/2" ALUMINUM ALLOY 6061-T6 BAR MAY ALSO BE USED TO FABRICATE SIGN BRACES.
7. INSTALL 48" DIAMOND WARNING SIGNS ON A SINGLE POST WITH A BRACE HAVING EFFECTIVE BRACE LENGTH OF 54" OR WITH THREE WIND FRAMING MEMBERS AS SHOWN ON STANDARD DRAWING S-00.11. THIS MODIFIES STANDARD DRAWING S-01.01.
8. ATTACH ALL SIGNS TO THEIR SUPPORTS WITH 3/8" BOLTS, EXCEPT ATTACH UNFRAMED SIGNS TO PST POSTS WITH ALUMINUM DRIVE RIVETS. WIND WASHERS ARE NOT REQUIRED WITH DRIVE RIVETS. INCLUDE SPLIT LOCK WASHERS WHEN BOLTS ARE USED.
9. ALL FASTENER HARDWARE SHALL MEET THE REQUIREMENTS OF THE "FASTENER SPECIFICATION TABLE" ON SHEET H1.
10. MAINTAIN EXISTING SIGNS UNTIL NEW SIGNS ARE INSTALLED. DO NOT LEAVE DUPLICATE OR CONFLICTING SIGNING UP AT ANY TIME.
11. ALL SIGNS NOTED FOR REMOVAL AND REINSTALLATION SHALL BE REPLACED AT THE CONTRACTOR'S EXPENSE IF THEY ARE DAMAGED DURING THE RELOCATION EFFORT.
12. LOCATE AND PROTECT ALL NEW AND EXISTING UNDERGROUND UTILITIES, INCLUDING BUT NOT LIMITED TO: PIPELINES, INTERCONNECT CABLES, SIGNAL SYSTEMS, LIGHTING SYSTEMS, STORM AND SANITARY SEWERS, WATER SYSTEMS, AND TELEPHONE AND ELECTRICAL CABLES, PRIOR TO INSTALLING SIGN POSTS. NOT ALL EXISTING UTILITIES MAY BE SHOWN ON THE PLANS.
13. THE 4" MOUNTING AREA ON MILEPOST SIGNS (D10-200 SERIES) SHALL BE BARE ALUMINUM. THIS ELIMINATES THE OPTION OF INSTALLING GREEN REFLECTIVE SHEETING IN THIS AREA AS NOTED IN THE ASDS.

FASTENER SPECIFICATION TABLE

FASTENERS	STEEL	STAINLESS STEEL
BOLTS	ASTM A307	ASTM F593
NUTS	ASTM A563	ASTM F594
WASHERS	ASTM A36	ASTM A480

Preliminary Plans

SIGN SUMMARY

STATE OF ALASKA 49TH GUANGYAN TU GRIFFIN CE 11229 REGISTERED PROFESSIONAL ENGINEER

PLANS DEVELOPED BY: STATE OF ALASKA DEPARTMENT OF TRANSPORTATION & PUBLIC FACILITIES, NORTHERN REGION, 2301 PEGER ROAD, FAIRBANKS, AK 99709 (907)451-2200
R:\Projects\Parks_Hwy\00423_Parks_188_192_Resurfacing\6 Design\5 Civil 3D\00423_Summary_Details_Est-H1 SIGN SUMMARY Fri, Aug/28/20 04:35pm

NO.	DATE	REVISION

STATE	PROJECT DESIGNATION	YEAR	SHEET NO.	TOTAL SHEETS
ALASKA	NFHWY00423/PENDING	2020	F1	F14

PLAN VIEW KEY

- (P) STATION / DIAMETER X LENGTH — *INSTALL CULVERT PIPE*
- (A) STATION / TYPE, WIDTH — *CONSTRUCT APPROACH*
- (R) STATION / DIAMETER X LENGTH — *REMOVE PIPE*
- (#) STATION / SIGN CODE(S) — *SIGN LOCATION #*

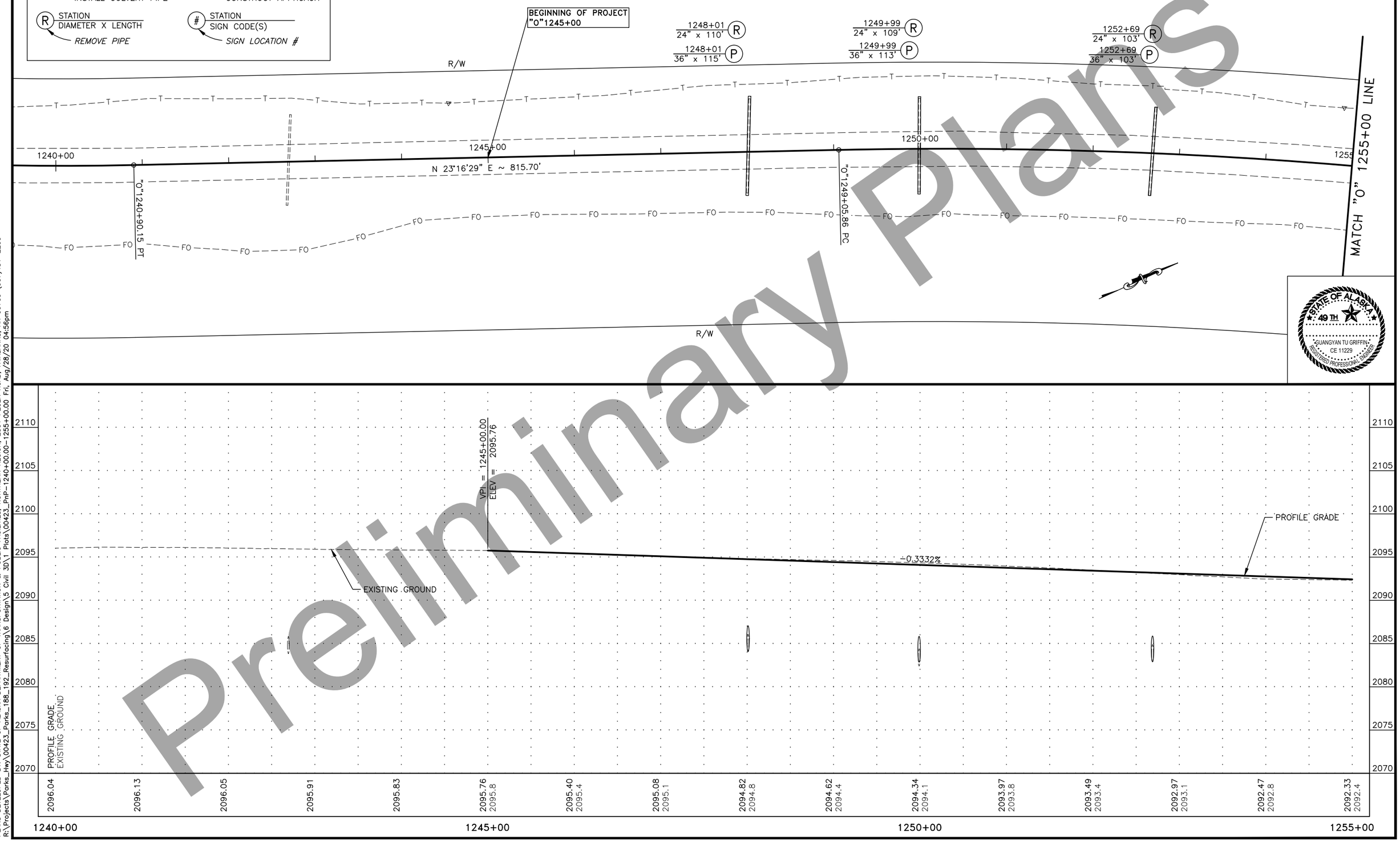

STATE OF ALASKA 49TH
GUANGYAN TU GRIFFIN
CE 11229
REGISTERED PROFESSIONAL ENGINEER

Preliminary Plans

PLANS DEVELOPED BY: STATE OF ALASKA DEPARTMENT OF TRANSPORTATION & PUBLIC FACILITIES, NORTHERN REGION, 2301 PEGER ROAD, FAIRBANKS, AK 99709 (907)451-2200
R:\Projects\Parks_Hwy\00423_Parks_188_192_Resurfacing\6 Design\5 Civil 3D\1 Plots\00423_PnP-1240+00.00-1255+00.00 Fri, Aug/28/20 04:56pm

NO.	DATE	REVISION

STATE	PROJECT DESIGNATION	YEAR	SHEET NO.	TOTAL SHEETS
ALASKA	NFHWY00423/PENDING	2020	F2	F14

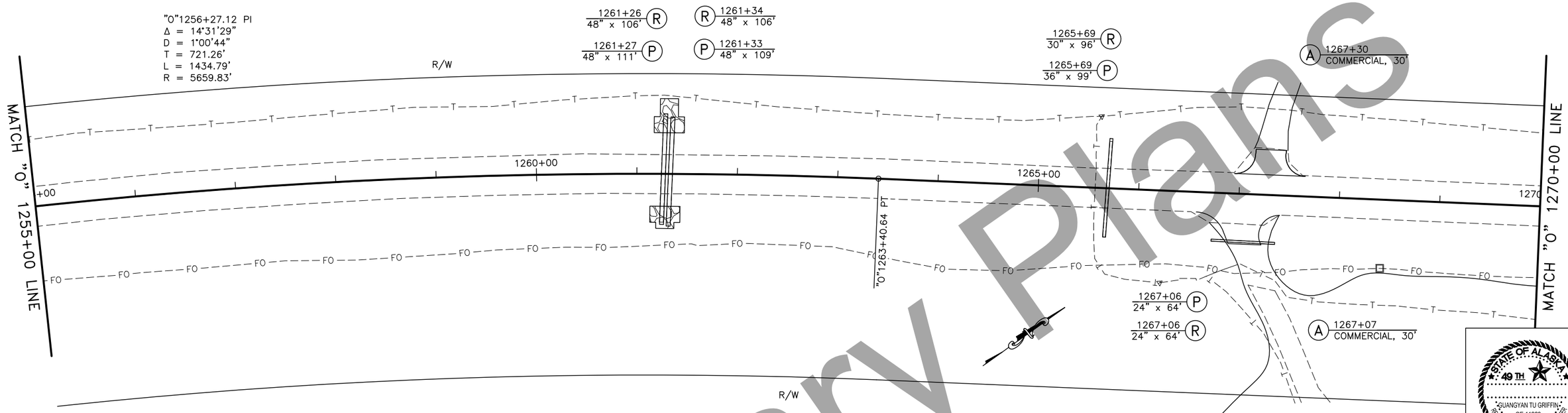

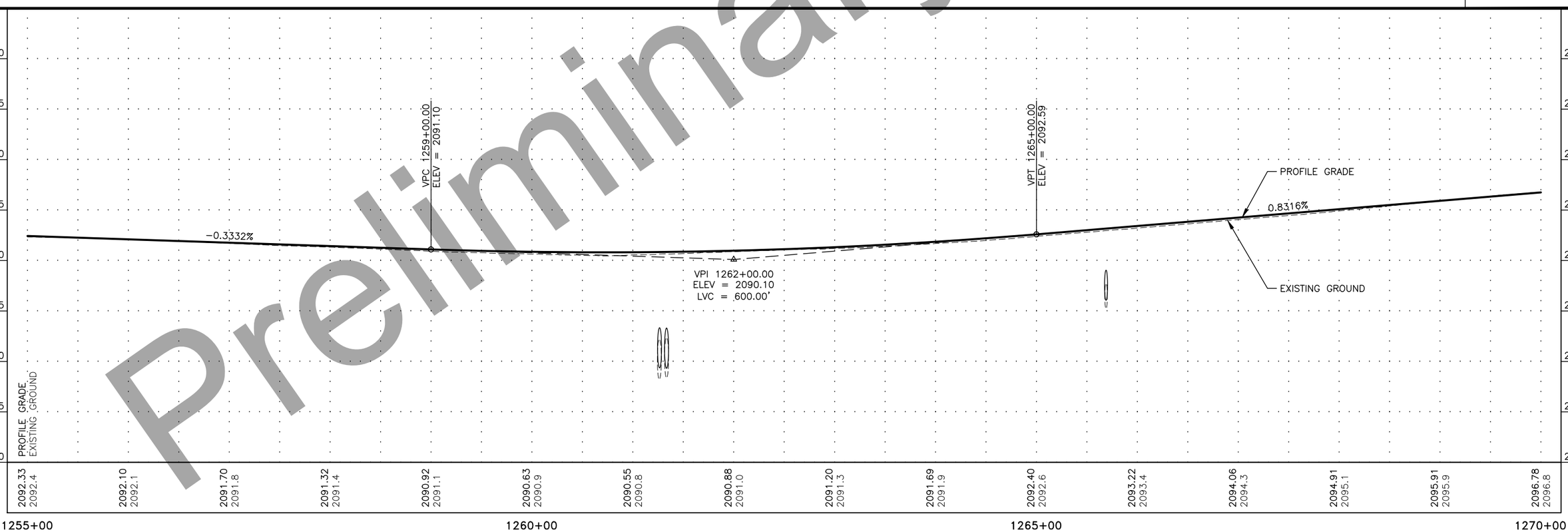

STATE OF ALASKA 49TH GUANGYAN TU GRIFFIN CE 11229 REGISTERED PROFESSIONAL ENGINEER

Preliminary Plans

PLANS DEVELOPED BY: STATE OF ALASKA DEPARTMENT OF TRANSPORTATION & PUBLIC FACILITIES, NORTHERN REGION, 2301 PEGER ROAD, FAIRBANKS, AK 99709 (907)451-2200
R:\Projects\Parks_Hwy\00423_Parks_188_192_Resurfacing\6 Design\5 Civil 3D\1 Plots\00423_PnP-1255+00.00-1270+00.00 Fri, Aug/28/20 04:56pm

NO.	DATE	REVISION

STATE	PROJECT DESIGNATION	YEAR	SHEET NO.	TOTAL SHEETS
ALASKA	NFHWY00423/PENDING	2020	F3	F14

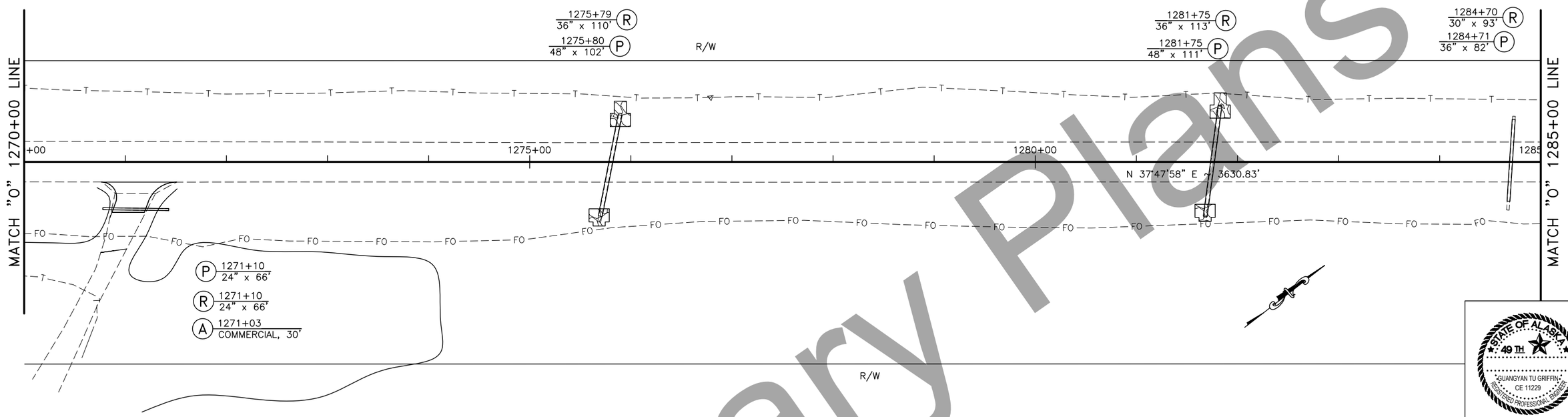

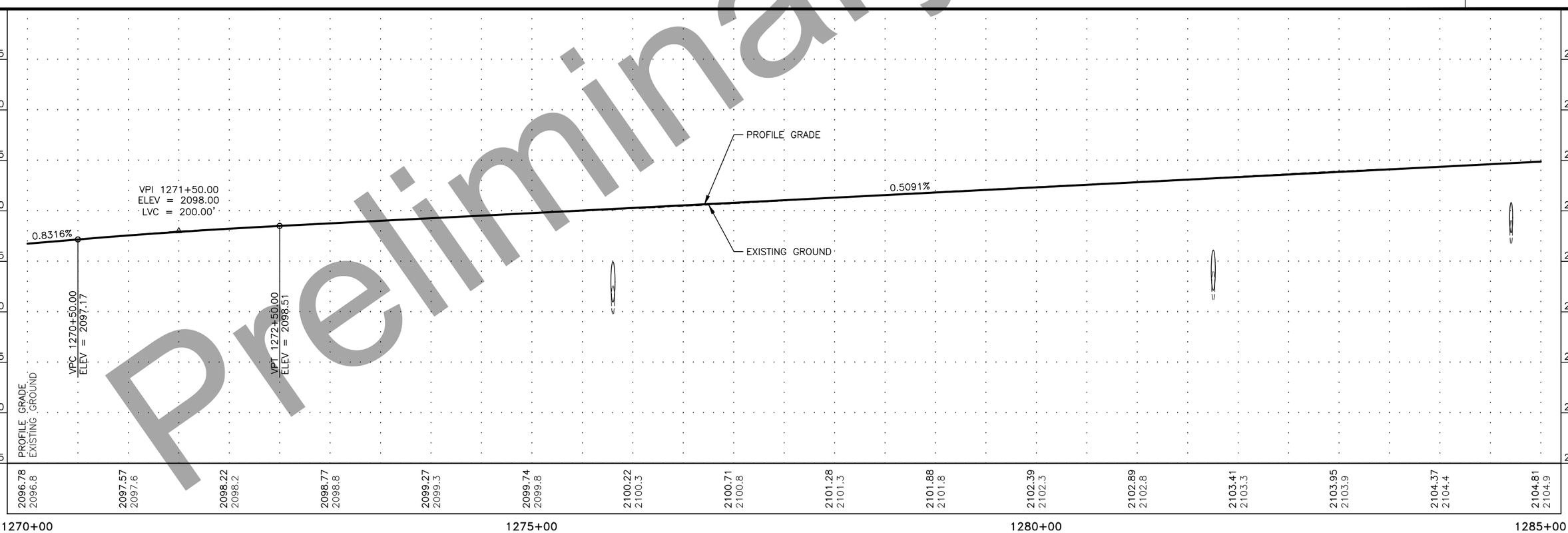

STATE OF ALASKA 49TH GUANGYAN TU GRIFFIN CE 11229 REGISTERED PROFESSIONAL ENGINEER

Preliminary Plans

PLANS DEVELOPED BY: STATE OF ALASKA DEPARTMENT OF TRANSPORTATION & PUBLIC FACILITIES, NORTHERN REGION, 2301 PEGER ROAD, FAIRBANKS, AK 99709 (907)451-2200
R:\Projects\Parks_Hwy\00423_Parks_188_192_Resurfacing\6 Design\5 Civil 3D\1 Plots\00423_PnP-1270+00.00-1285+00.00 Fri, Aug/28/20 04:56pm

NO.	DATE	REVISION

STATE	PROJECT DESIGNATION	YEAR	SHEET NO.	TOTAL SHEETS
ALASKA	NFHWY00423/PENDING	2020	F4	F14

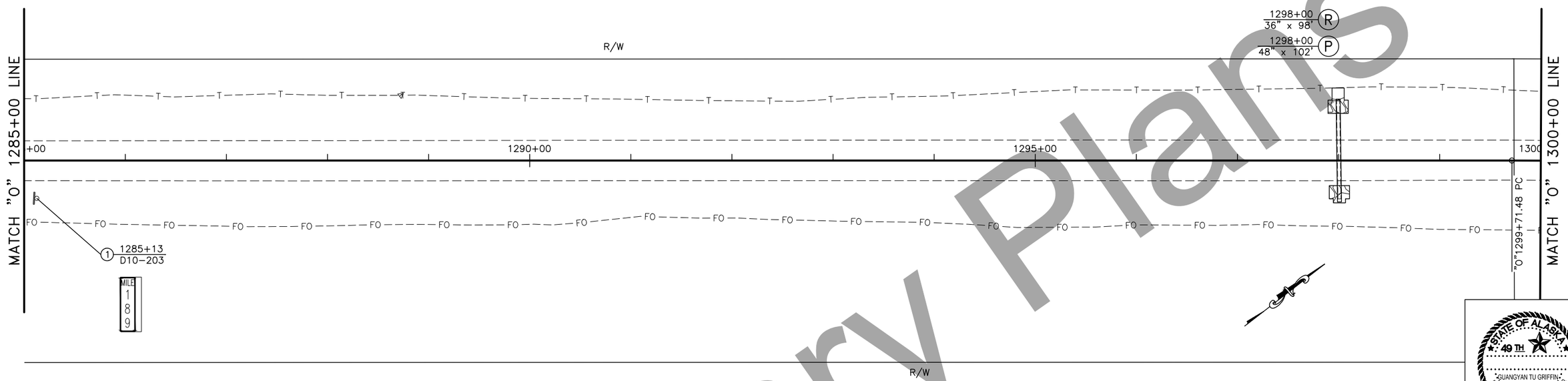

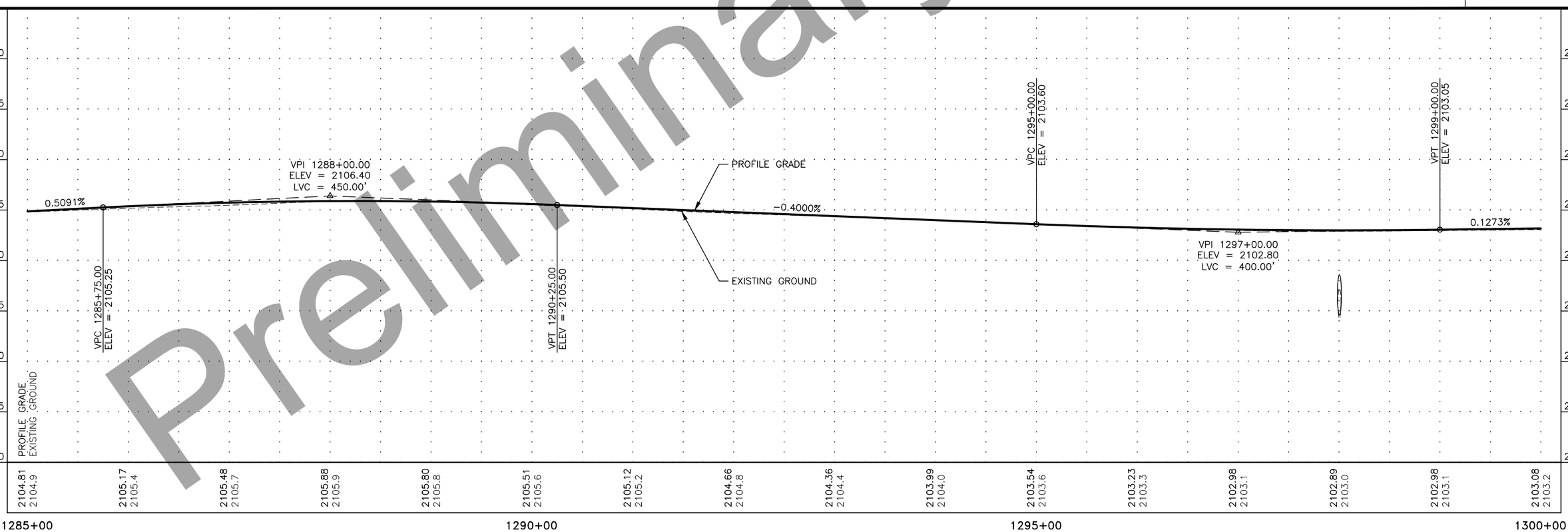

STATE OF ALASKA 49TH
GUANGYAN TU GRIFFIN
CE 11229
REGISTERED PROFESSIONAL ENGINEER

Preliminary Plans

PLANS DEVELOPED BY: STATE OF ALASKA DEPARTMENT OF TRANSPORTATION & PUBLIC FACILITIES, NORTHERN REGION, 2301 PEGER ROAD, FAIRBANKS, AK 99709 (907)451-2200
R:\Projects\Parks_Hwy\00423_Parks_188_192_Resurfacing\6 Design\5 Civil 3D\1 Plots\00423_PnP-1285+00.00-1300+00.00 Fri, Aug/28/20 04:57pm

NO.	DATE	REVISION

STATE	PROJECT DESIGNATION	YEAR	SHEET NO.	TOTAL SHEETS
ALASKA	NFHWY00423/PENDING	2020	F5	F14

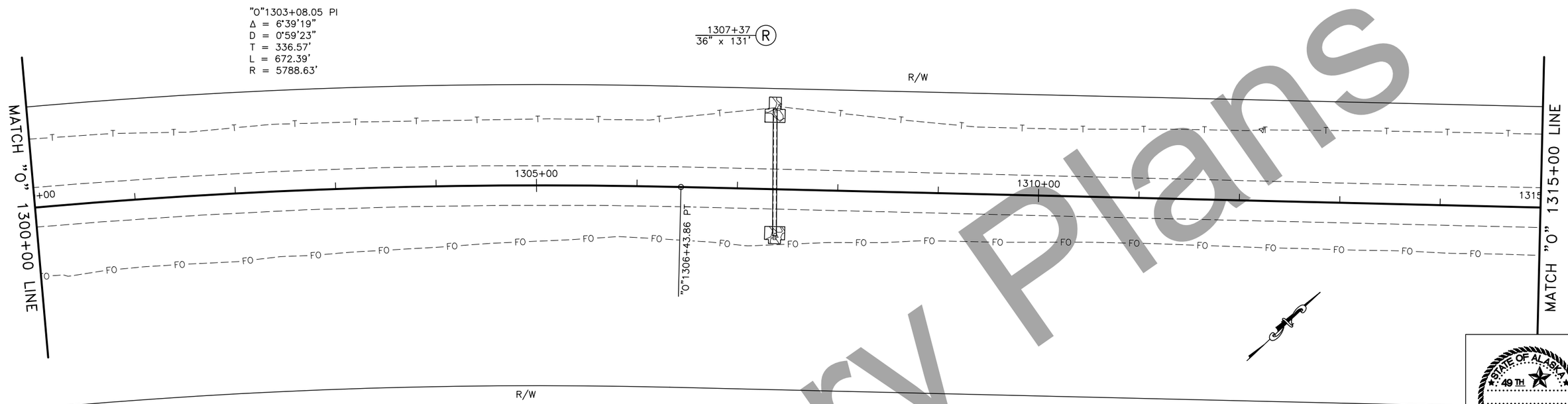

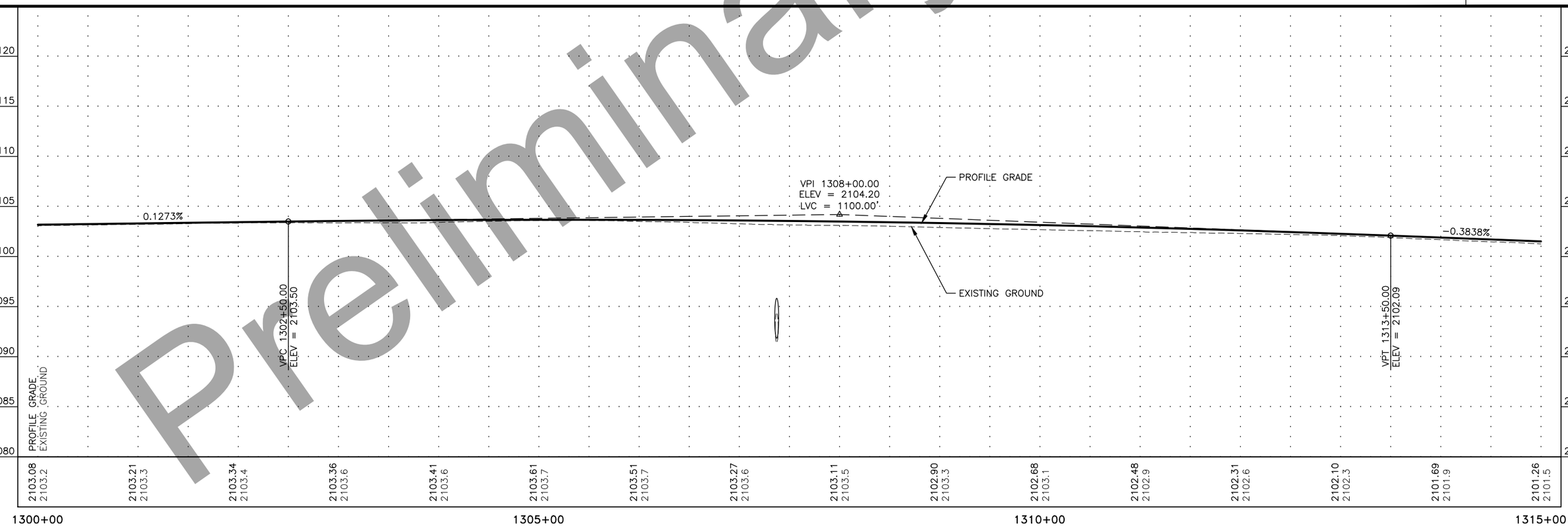

STATE OF ALASKA 49TH
GUANGYAN TU GRIFFIN
CE 11229
REGISTERED PROFESSIONAL ENGINEER

Preliminary Plans

PLANS DEVELOPED BY: STATE OF ALASKA DEPARTMENT OF TRANSPORTATION & PUBLIC FACILITIES, NORTHERN REGION, 2301 PEGER ROAD, FAIRBANKS, AK 99709 (907)451-2200
R:\Projects\Parks_Hwy\00423_Parks_188_192_Resurfacing\6 Design\5 Civil 3D\1 Plots\00423_PnP-1300+00.00-1315+00.00 Fri, Aug/28/20 04:57pm

NO.	DATE	REVISION

STATE	PROJECT DESIGNATION	YEAR	SHEET NO.	TOTAL SHEETS
ALASKA	NFHWY00423/PENDING	2020	F6	F14

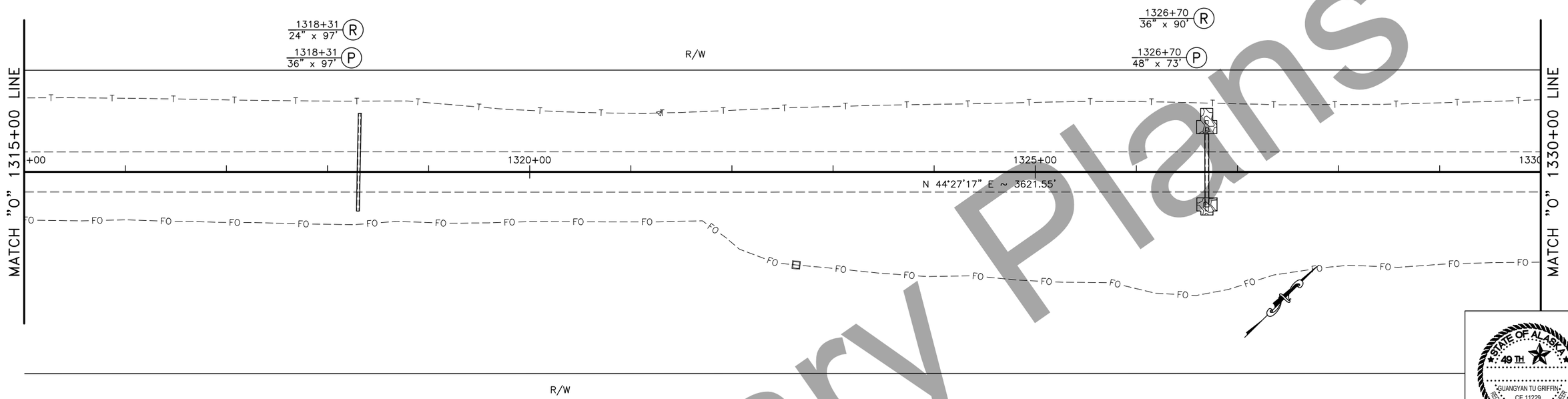

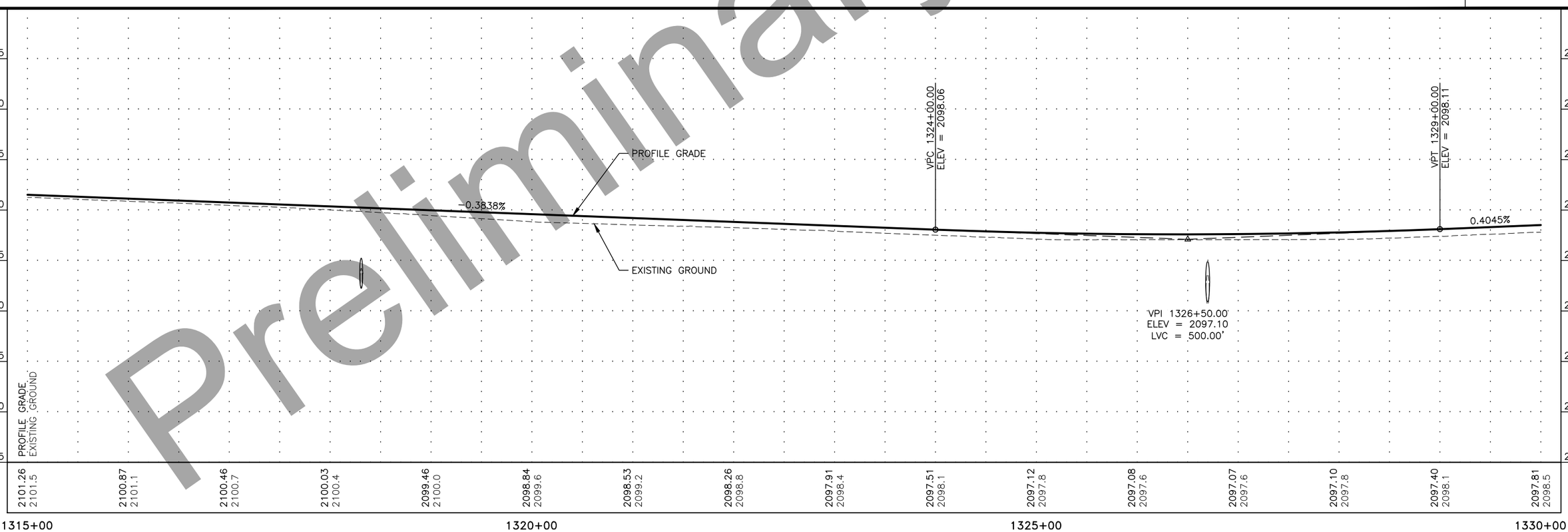

Preliminary Plans

PLANS DEVELOPED BY: STATE OF ALASKA DEPARTMENT OF TRANSPORTATION & PUBLIC FACILITIES, NORTHERN REGION, 2301 PEGER ROAD, FAIRBANKS, AK 99709 (907)451-2200
R:\Projects\Parks_Hwy\00423_Parks_188_192_Resurfacing\6 Design\5 Civil 3D\1 Plots\00423_PnP-1315+00.00-1330+00.00 Fri, Aug/28/20 04:57pm

NO.	DATE	REVISION

STATE	PROJECT DESIGNATION	YEAR	SHEET NO.	TOTAL SHEETS
ALASKA	NFHWY00423/PENDING	2020	F7	F14

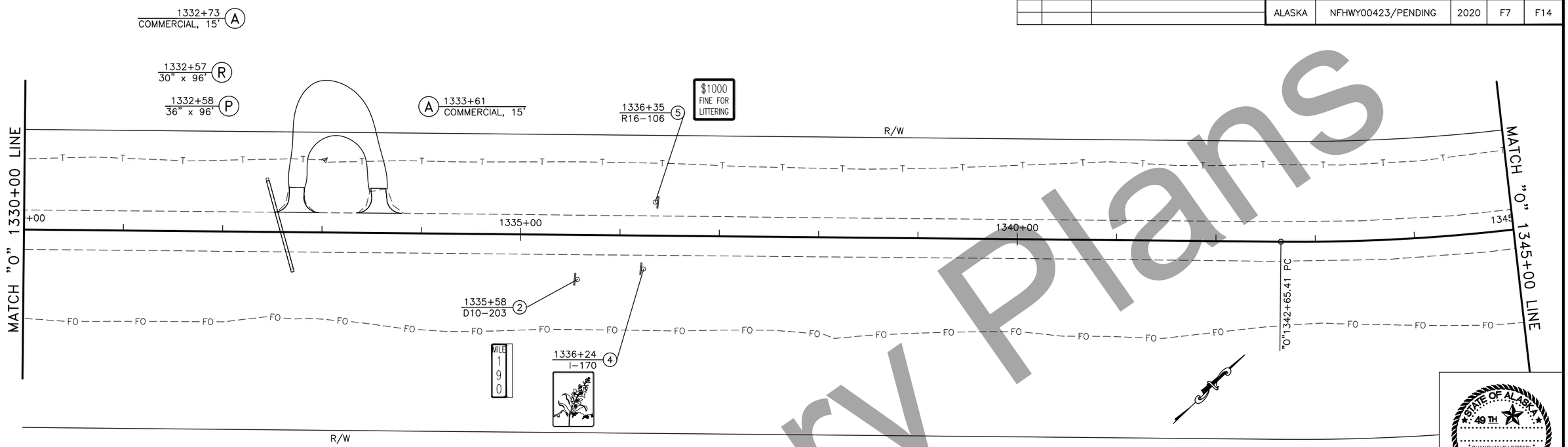

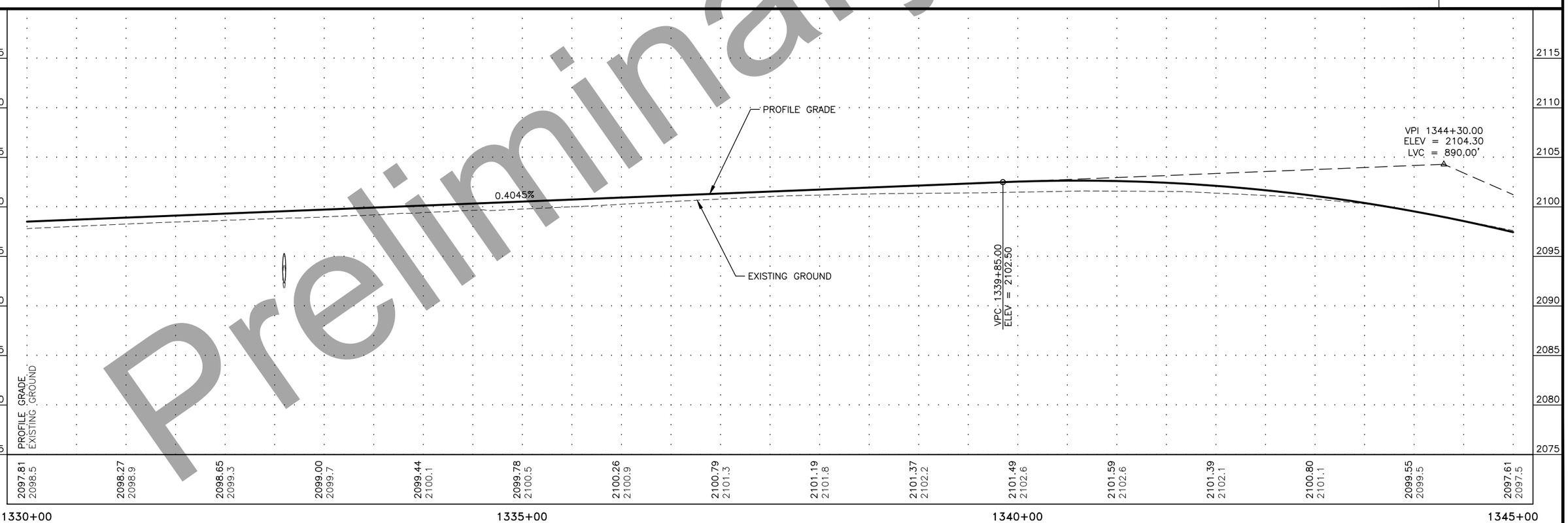

STATE OF ALASKA 49TH
GUANGYAN TU GRIFFIN
CE 11229
REGISTERED PROFESSIONAL ENGINEER

Preliminary Plans

PLANS DEVELOPED BY: STATE OF ALASKA DEPARTMENT OF TRANSPORTATION & PUBLIC FACILITIES, NORTHERN REGION, 2301 PEGER ROAD, FAIRBANKS, AK 99709 (907)451-2200
R:\Projects\Parks_Hwy\00423_Parks_188_192_Resurfacing\6 Design\5 Civil 3D\1 Plots\00423_PnP-1330+00.00-1345+00.00 Fri, Aug/28/20 04:57pm

NO.	DATE	REVISION

STATE	PROJECT DESIGNATION	YEAR	SHEET NO.	TOTAL SHEETS
ALASKA	NFHWY00423/PENDING	2020	F8	F14

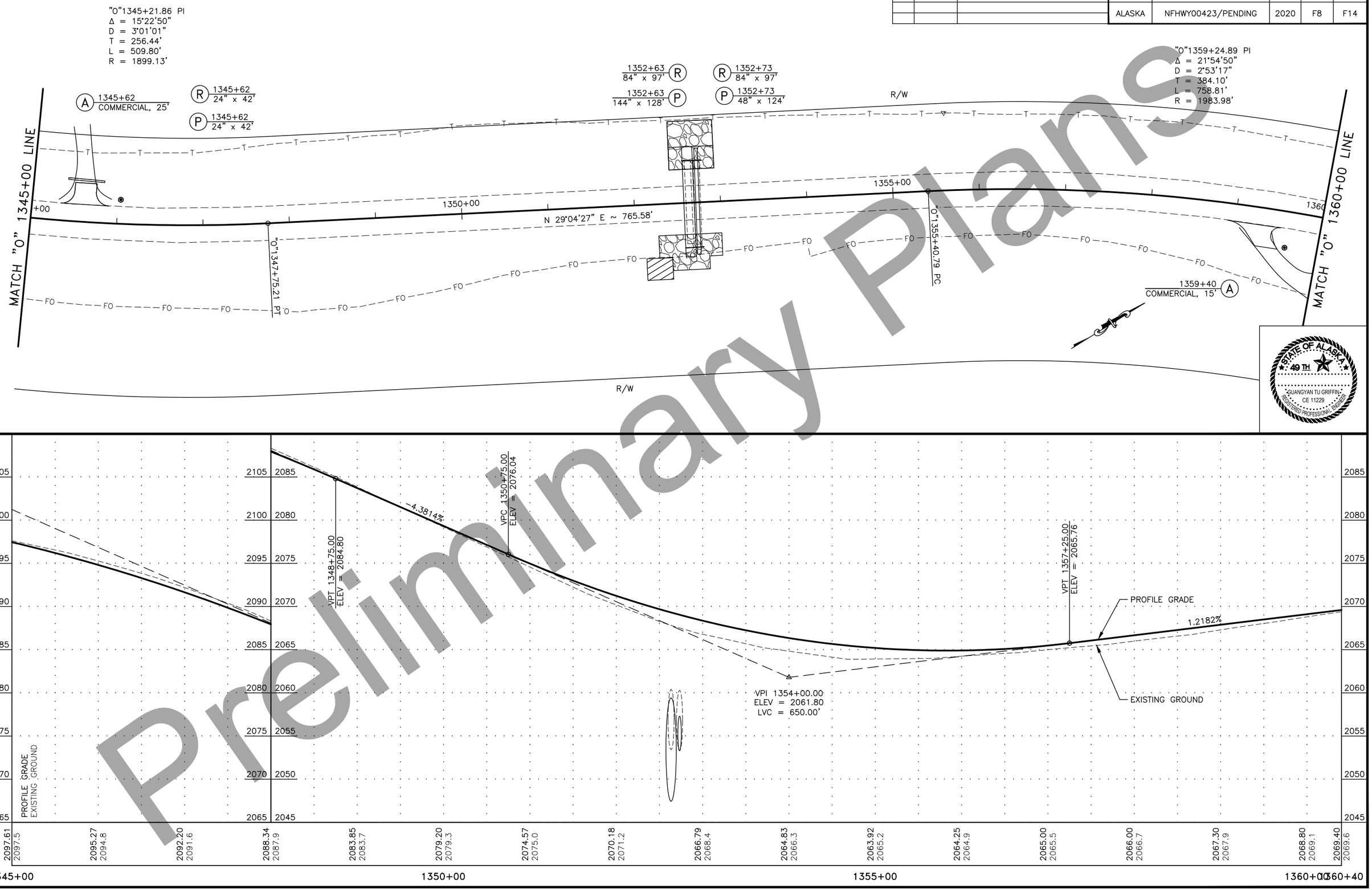

Preliminary Plans

PLANS DEVELOPED BY: STATE OF ALASKA DEPARTMENT OF TRANSPORTATION & PUBLIC FACILITIES, NORTHERN REGION, 2301 PEGER ROAD, FAIRBANKS, AK 99709 (907)451-2200
R:\Projects\Parks_Hwy\00423_Parks_188_192_Resurfacing\6 Design\5 Civil 3D\1 Plots\00423_PnP-1345+00.00-1360+00.00 Fri, Aug/28/20 04:57pm

NO.	DATE	REVISION

STATE	PROJECT DESIGNATION	YEAR	SHEET NO.	TOTAL SHEETS
ALASKA	NFHWY00423/PENDING	2020	F9	F14

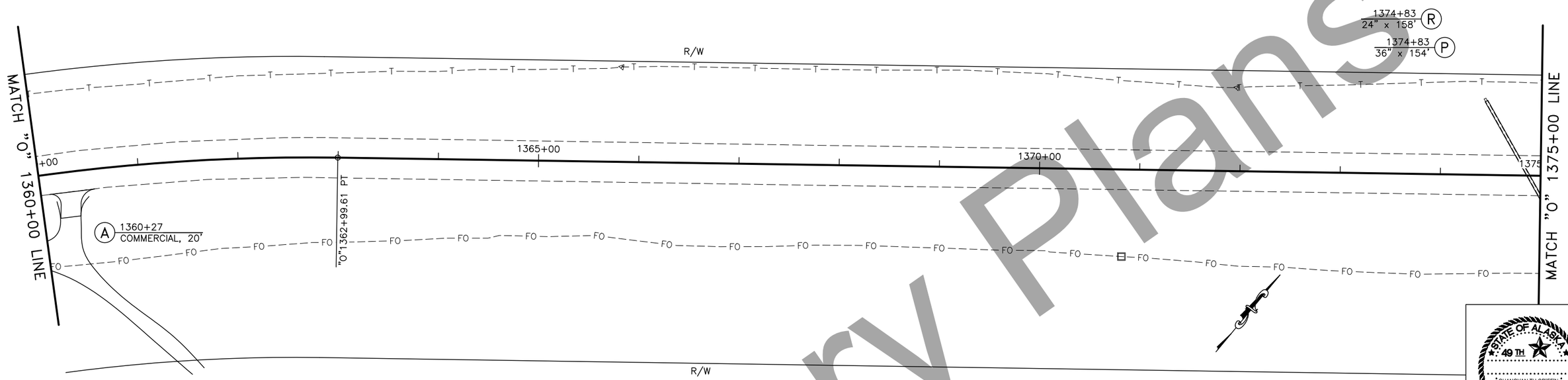

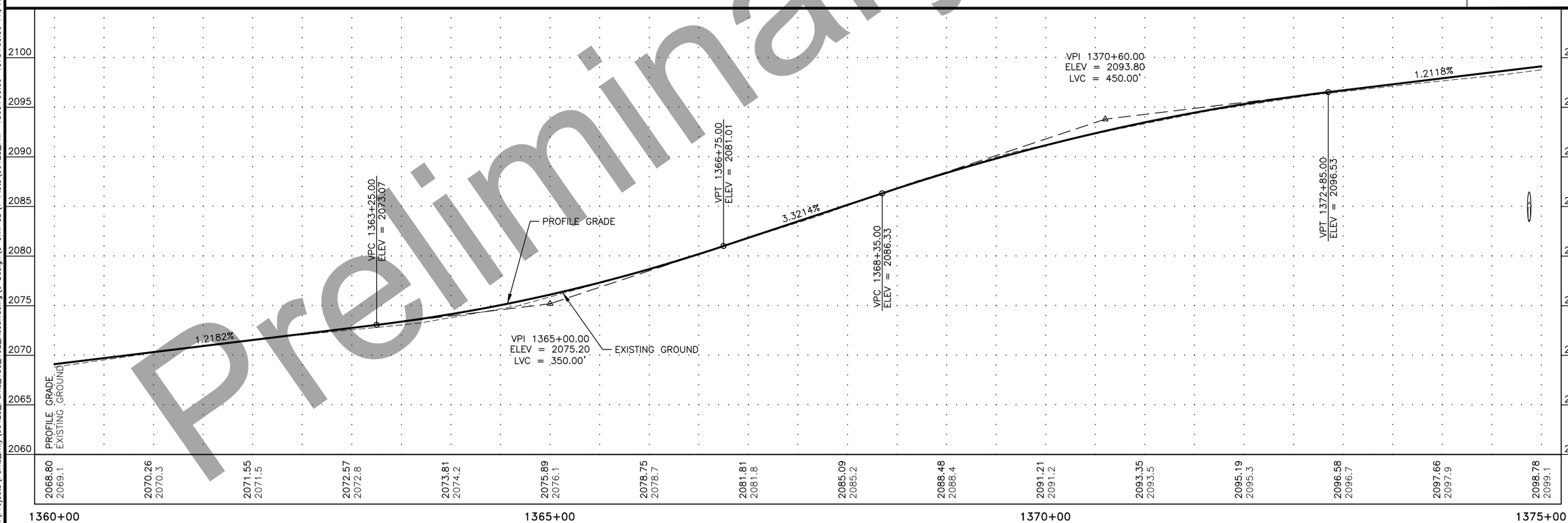

STATE OF ALASKA
49TH
GUANGYAN TU GRIFFIN
CE 11229
REGISTERED PROFESSIONAL ENGINEER

Preliminary Plans

PLANS DEVELOPED BY: STATE OF ALASKA DEPARTMENT OF TRANSPORTATION & PUBLIC FACILITIES, NORTHERN REGION, 2301 PEGER ROAD, FAIRBANKS, AK 99709 (907)451-2200
R:\Projects\Parks_Hwy\00423_Parks_188_192_Resurfacing\6 Design\5 Civil 3D\1 Plots\00423_PnP-1360+00.00-1375+00.00 Fri, Aug/28/20 04:57pm

NO.	DATE	REVISION

STATE	PROJECT DESIGNATION	YEAR	SHEET NO.	TOTAL SHEETS
ALASKA	NFHWY00423/PENDING	2020	F10	F14

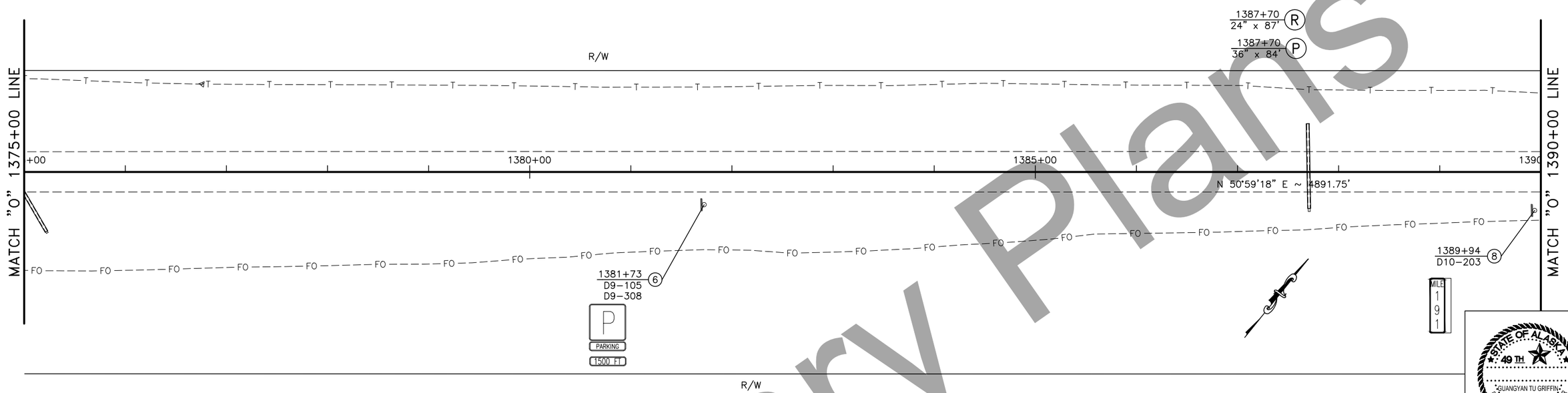

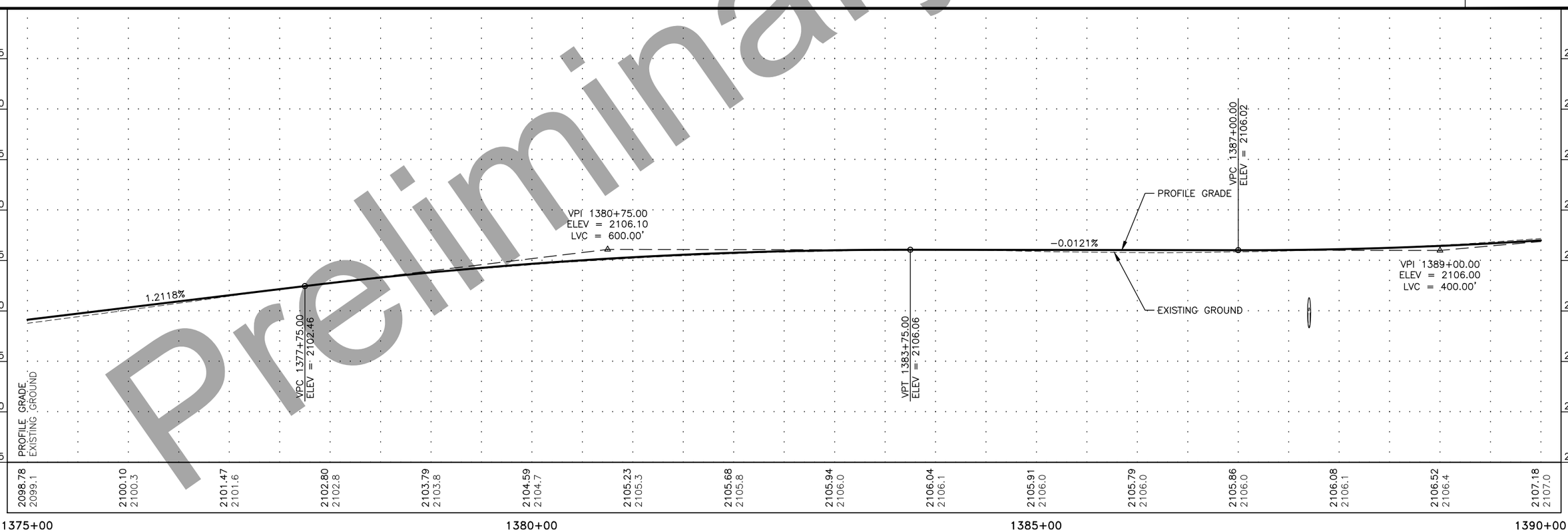

STATE OF ALASKA 49TH GUANGYAN TU GRIFFIN CE 11229 REGISTERED PROFESSIONAL ENGINEER

Preliminary Plans

PLANS DEVELOPED BY: STATE OF ALASKA DEPARTMENT OF TRANSPORTATION & PUBLIC FACILITIES, NORTHERN REGION, 2301 PEGER ROAD, FAIRBANKS, AK 99709 (907)451-2200
R:\Projects\Parks_Hwy\00423_Parks_188_192_Resurfacing\6 Design\5 Civil 3D\1 Plots\00423_PnP-1375+00.00-1390+00.00 Fri, Aug/28/20 04:57pm

NO.	DATE	REVISION

STATE	PROJECT DESIGNATION	YEAR	SHEET NO.	TOTAL SHEETS
ALASKA	NFHWY00423/PENDING	2020	F11	F14

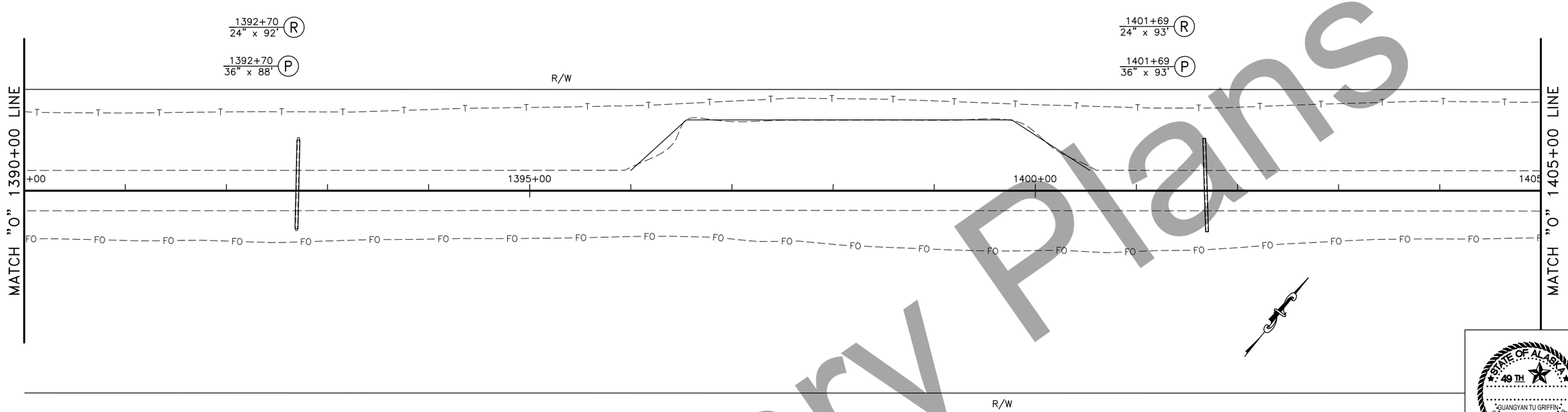

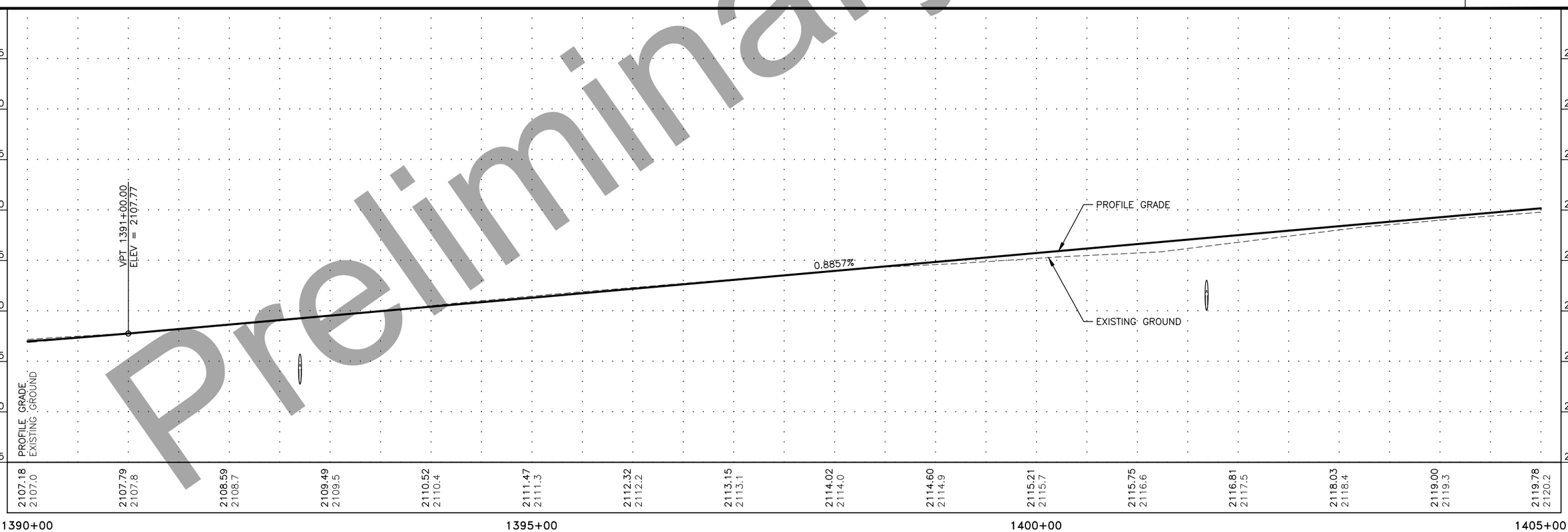

STATE OF ALASKA 49TH
GUANGYAN TU GRIFFIN
CE 11229
REGISTERED PROFESSIONAL ENGINEER

Preliminary Plans

PLANS DEVELOPED BY: STATE OF ALASKA DEPARTMENT OF TRANSPORTATION & PUBLIC FACILITIES, NORTHERN REGION, 2301 PEGER ROAD, FAIRBANKS, AK 99709 (907)451-2200
R:\Projects\Parks_Hwy\00423_Parks_188_192_Resurfacing\6 Design\5 Civil 3D\1 Plots\00423_PnP-1390+00.00-1405+00.00 Fri, Aug/28/20 04:58pm

NO.	DATE	REVISION

STATE	PROJECT DESIGNATION	YEAR	SHEET NO.	TOTAL SHEETS
ALASKA	NFHWY00423/PENDING	2020	F12	F14

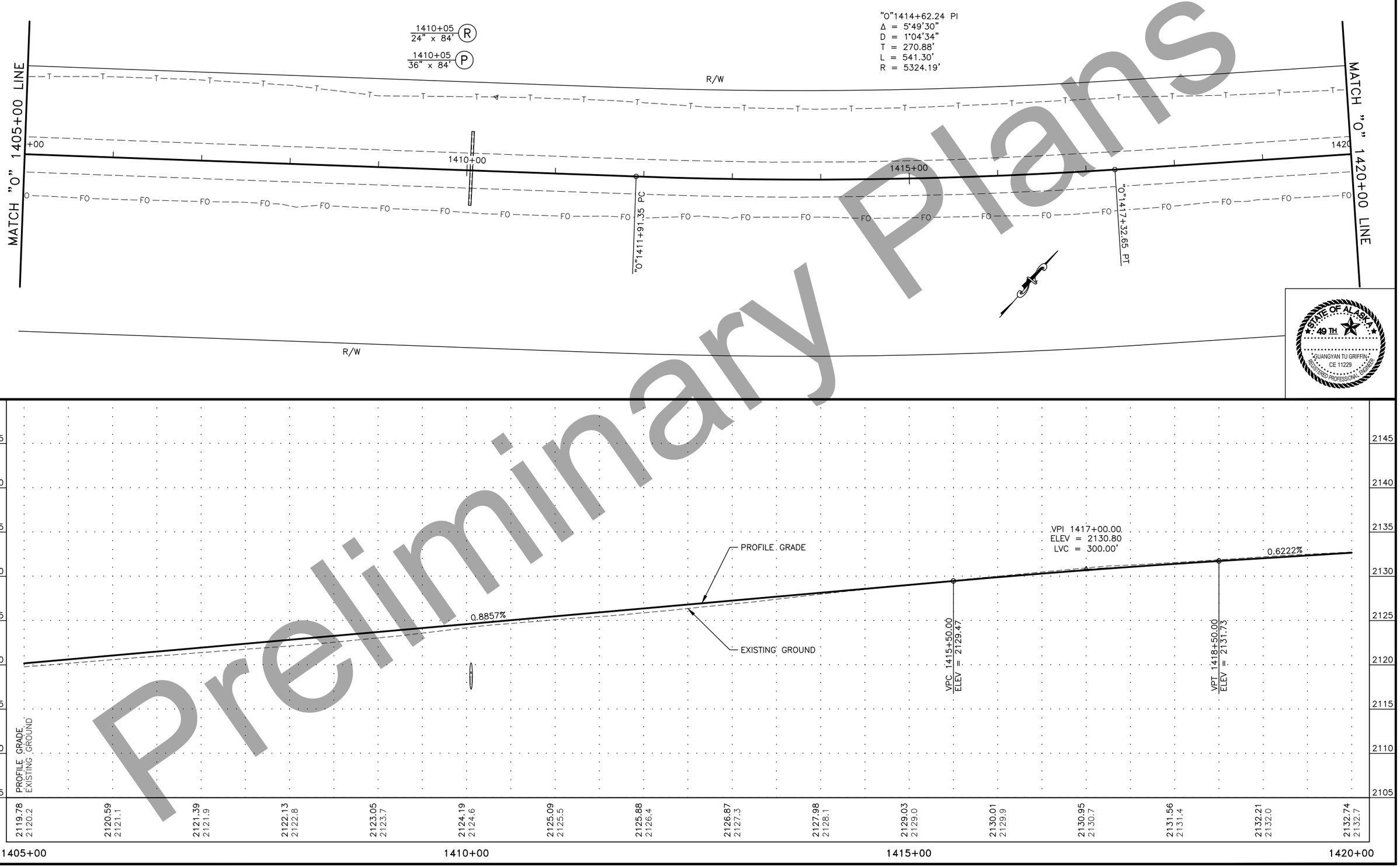

STATE OF ALASKA 49TH GUANGYAN TU GRIFFIN CE 11229 REGISTERED PROFESSIONAL ENGINEER

Preliminary Plans

PLANS DEVELOPED BY: STATE OF ALASKA DEPARTMENT OF TRANSPORTATION & PUBLIC FACILITIES, NORTHERN REGION, 2301 PEGER ROAD, FAIRBANKS, AK 99709 (907)451-2200
R:\Projects\Parks_Hwy\00423_Parks_188_192_Resurfacing\6 Design\5 Civil 3D\1 Plots\00423_PnP-1405+00.00-1420+00.00 Fri, Aug/28/20 04:58pm

NO.	DATE	REVISION

STATE	PROJECT DESIGNATION	YEAR	SHEET NO.	TOTAL SHEETS
ALASKA	NFHWY00423/PENDING	2020	F13	F14

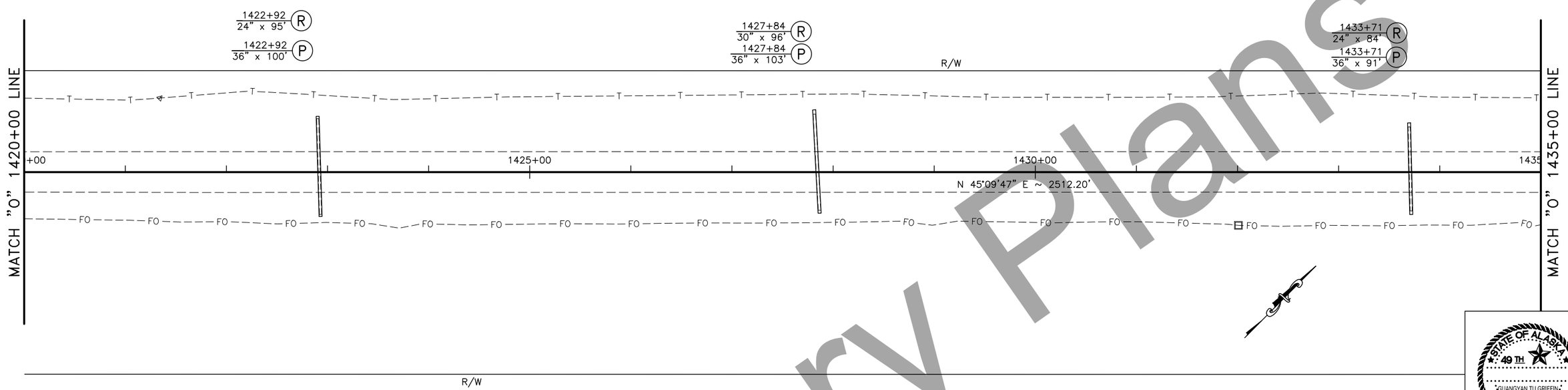

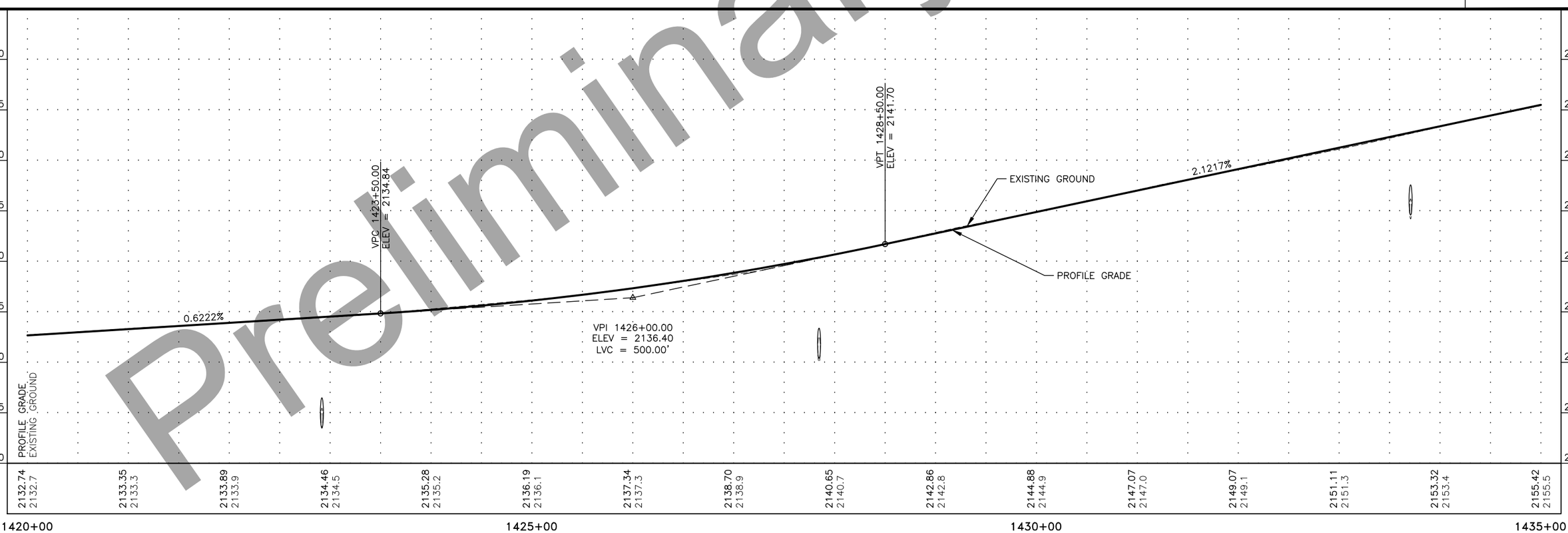

STATE OF ALASKA 49TH
GUANGYAN TU GRIFFIN
CE 11229
REGISTERED PROFESSIONAL ENGINEER

Preliminary Plans

PLANS DEVELOPED BY: STATE OF ALASKA DEPARTMENT OF TRANSPORTATION & PUBLIC FACILITIES, NORTHERN REGION, 2301 PEGER ROAD, FAIRBANKS, AK 99709 (907)451-2200
R:\Projects\Parks_Hwy\00423_Parks_188_192_Resurfacing\6 Design\5 Civil 3D\1 Plots\00423_PnP-1420+00.00-1435+00.00 Fri, Aug/28/20 04:58pm

NO.	DATE	REVISION

STATE	PROJECT DESIGNATION	YEAR	SHEET NO.	TOTAL SHEETS
ALASKA	NFHWY00423/PENDING	2020	F14	F14

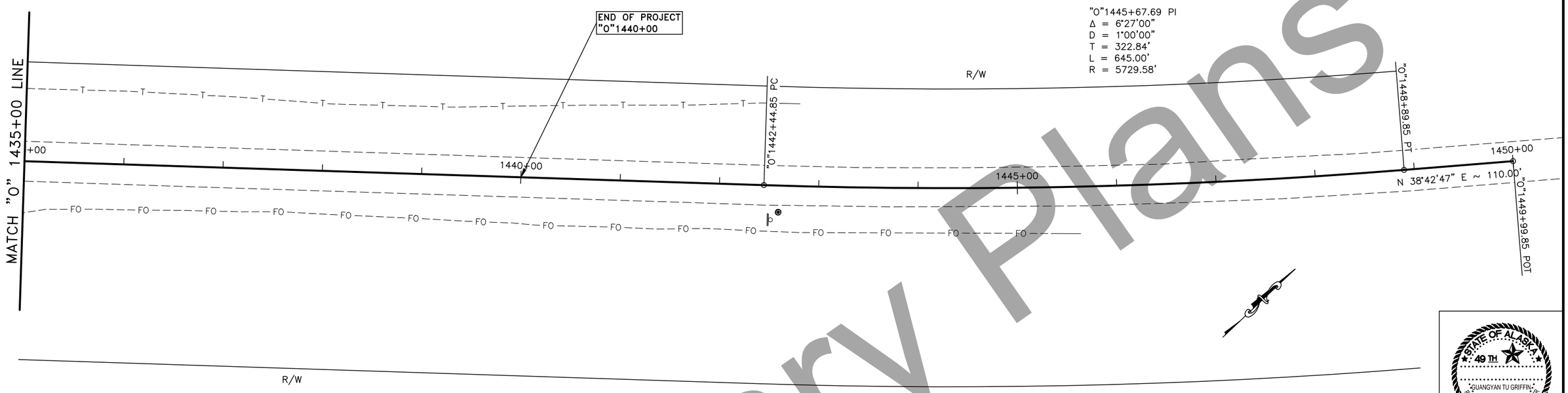

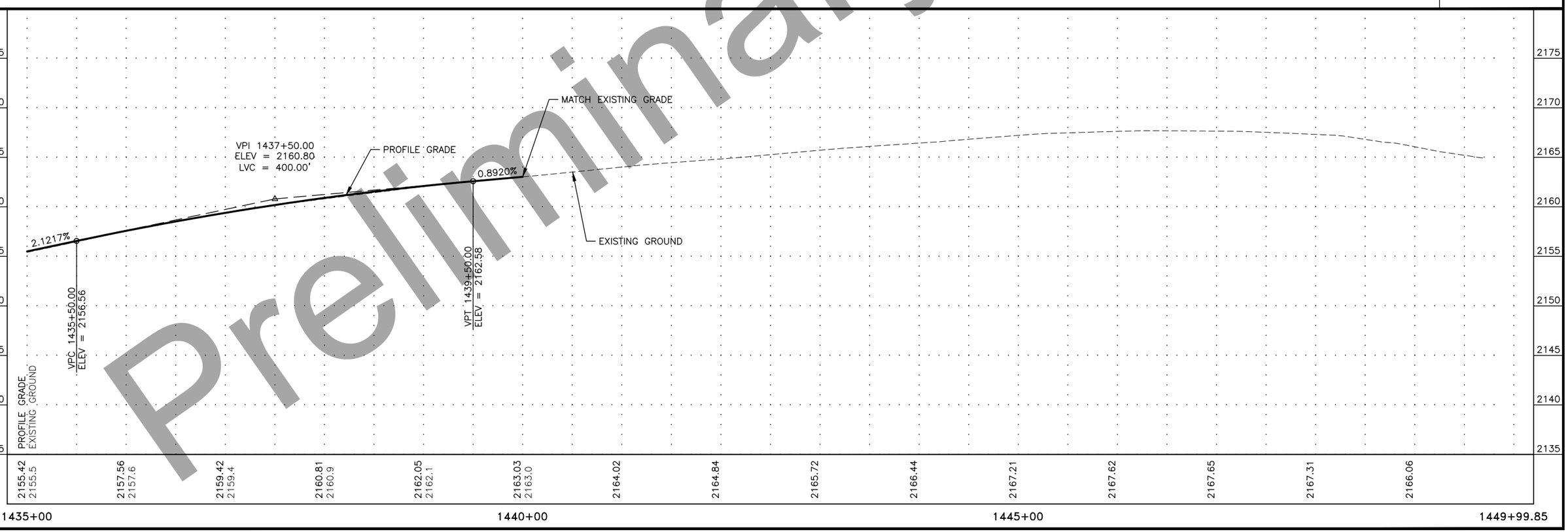

STATE OF ALASKA
49TH
GUANGYAN TU GRIFFIN
CE 11229
REGISTERED PROFESSIONAL ENGINEER

Preliminary Plans

PLANS DEVELOPED BY: STATE OF ALASKA DEPARTMENT OF TRANSPORTATION & PUBLIC FACILITIES, NORTHERN REGION, 2301 PEGER ROAD, FAIRBANKS, AK 99709 (907)451-2200
R:\Projects\Parks_Hwy\00423_Parks_188_192_Resurfacing\6 Design\5 Civil 3D\1 Plots\00423_PnP-1435+00.00-1449+99.85 Fri, Aug/28/20 04:58pm