Preferred Alternative Summary Memo

DATE: November 29, 2019

SUBJECT: BAI2: Diverging Diamond Build Alternative Impacts

Alternative Concept

This alternative would construct a Diverging Diamond Interchange as shown in Attachment A. This is a relatively new type of interchange that has been gaining popularity throughout the United States. The first Diverging Diamond Interchange built in Alaska is at the Muldoon Road interchange with the Glenn Highway and has been under operation for about one year.

Figure 1 shows how vehicles move through the interchange. The northbound and southbound through traffic on the Steese Expressway would be carried up and over the intersection without stopping. East- and westbound traffic will each cross to the left as they approach the bridge, and then cross back to the right after the bridge. With this configuration, right turn movements are made onto a ramp before the crossover as standard right turns. The left turn movements are made onto a ramp after the crossover, so that the left turn movement enters the ramp freely, similar to a right turn movement. The crossover intersections and the off ramp merge intersections are signalized with two phases.

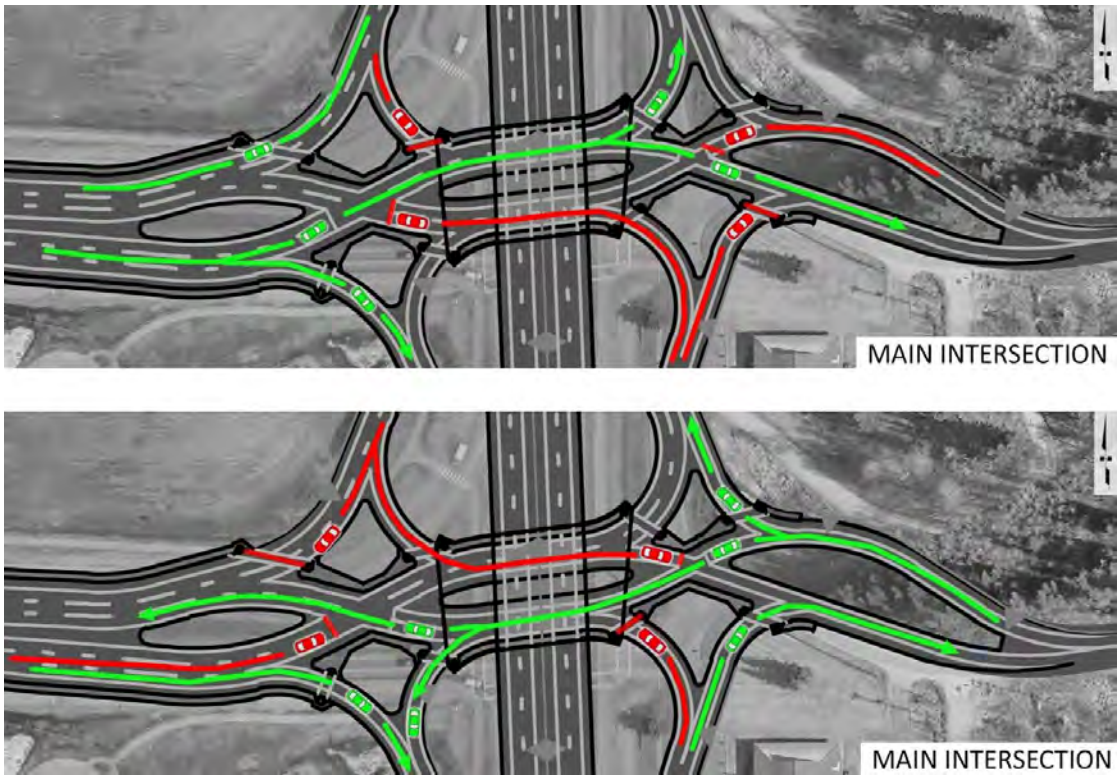

Figure 1: Vehicular Movements through Diverging Diamond Alternative

The Diverging Diamond Interchange has fewer conflict points than a Conventional Diamond Interchange. This configuration works well when there are either heavy left or right turn movements on or off of the ramps. Thus, it accommodates the heavy eastbound left turn movement in the PM peak.

Many interchanges of this type have been built in the United States, including the one recently constructed in Anchorage, Alaska.

Design Criteria sheets for the Diverging Diamond Interchange are provided in Attachment B.

Traffic Management and Constructability Considerations

This interchange would be constructed in six phases in order to maintain traffic through the intersection. This will require some temporary roadway and traffic detouring. Short-term (i.e., overnight) closures of Johansen Expressway across Steese Highway will likely be required to place the overpass girders. A conceptual Traffic Management and Construction Phasing Plan is included in Attachment C.

Traffic impacts during construction for the DDI were considered. Closing or restricting Lazelle Road traffic would help reduce these impacts. Specific impacts during each construction phase are included in Attachment C.

Girder selection for the structures will be an issue. The typical concrete girder design is more economical overall when compared to steel. The shipping of steel girders and the volatility of steel prices tend to significantly offset savings of design and construction efficiency. The proposed structure is a common type for Alaska and can be completed with conventional methods and gives more opportunities for local contractors to bid. Note that if steel girders are chosen, there will most likely be a temporary bent at the splice. Another steel girder erection method would pair the girders full length, transport them from the laydown area to the site, and set them in place using two large cranes; this method may limit the project to a select few capable contractors. Single span concrete girders can be set using a two crane pick or a single crane pick if a reasonably large crane is available. An overall Constructability Review memo is included in Attachment D.

Drainage Considerations

Surface water near the Steese Johansen interchange generally flows from the south and east toward the northwest. Currently, water is collected by drainage swales and curb and gutter systems and directed to culverts that flow under the intersections toward the northwest quadrant. However, the slopes across the intersection are minimal, resulting in ponding.

A stormwater pond is proposed for the northwest quadrant of the interchange for water runoff to drain to, serving areas in the general vicinity of the interchange. The proposed improvements to the interchange will include designs to capture surface water runoff and transport it to the same general location. Proposed surface grade improvements at the existing intersection will be raised two to three feet to allow culvert conveyance under the proposed roadways.

The proposed Steese and Johansen Expressway roadways fall on their existing roadways outside the interchange. Consequently, drainage to existing medians and drainage ditches will be maintained in these areas.

Surface water that runs off the proposed bridge decks will be captured in a series of inlets grates and culverts, ultimately draining to the stormwater pond in the northwest quadrant. Drainage design will follow the guidance provided in FHWA HEC-21 Design of Bridge Deck Drainage (HEC-21). The proposed medians will be graded to low points located to capture runoff and transport away from the highway.

Localized drainage at both the church and Ford dealership will need to be evaluated closely and may require special drainage treatments to carry surface water to the proposed stormwater pond. Currently, both locations do not drain well and experience problems related to ponding.

Maintenance Considerations

Additional Lane Miles

This alternative adds approximately 1.8 lane-miles of roadway compared to the existing intersection; as such the cost of maintenance needed for the Diverging Diamond Interchange will be higher. The additional lane miles are due to an increase in the number of travel lanes, the crossover configuration, and the on and off ramps.

Snow Removal

Snow is typically stored on the outer, right side of the road. In the Diverging Diamond Interchange, because of the crossovers, the outside shoulder of the road will be to the left of the travel lane. The Diverging Diamond Interchange also has additional raised medians (required for traffic delineation) and lane-miles which will require snow removal. This alternative also encompasses the Steese Expressway bridge, new exit and entrance ramps, and associated retaining walls. Snow will need to be carried off the bridge and plowed into depressed medians where barriers are present. Due to these changes in geometry, the Diverging Diamond will require more snow

removal effort and different operations from usual for DOT&PF maintenance forces. In addition, the complex geometry through the interchange will not be conducive to high efficiency gang plow operations that can be used on the rest of the Steese and Johansen Expressway corridors.

Because of the barriers and ramp proximity, snow may need to be loaded and hauled off; therefore, a new snow dump is proposed in the vicinity of the existing Farmers Loop Road Extension/bike path.

Additional Signals

The Diverging Diamond Interchange will require two signalized intersections along the Johansen Expressway: one for the southbound on and off ramps and one for the northbound on and off ramps. Currently there is one signalized intersection.

Preliminary Bridge Design

The preliminary bridge design considered three options for construction of the Diverging Diamond Interchange bridge, a Single Span Deck Bulb-Tee, Single Span Steel Glider, or Two Span Deck Bulb-Tee. The Single Span Deck Bulb-Tee has the shortest span, lowest initial cost, and is familiar to contractors throughout Alaska. It is recommended that this structure type be used for the Diverging Diamond Interchange bridge. A Preliminary Bridge Selection Memo is included in Attachment E.

Bridge Vertical Clearance

The proposed design provides a 19 ft minimum bridge vertical clearance to allow for oversized vehicles.

Bridge Opening

The proposed bridge opening along the eastbound Johansen Expressway/westbound Lazelle Road is 122 feet wide by 19 feet high. However, the opening for eastbound or westbound traffic (distance between retaining wall and the edge of the center island) is approximately 50 feet wide by 19 feet high. Vehicles not fitting within this opening will need to use Goldstream Road.

Other Considerations

Car Dealership Visibility

The car dealership in the southwest quadrant of the Steese Expressway/Johansen Expressway intersection will have visibility impacts with the construction of the Diverging Diamond Interchange. The southbound and northbound through movements along the Steese Expressway will be elevated over the intersection and will have guardrail or concrete barriers along them. As a result, the dealership will have little visibility from northbound traffic, and about one third of the lot will be obscured for southbound traffic.

Additionally, vehicles heading westbound along Lazelle Road to turn north on to the Steese Expressway will not be able to see the dealership.

However, traffic on Johansen Expressway will continue to have an unimpeded view of the dealership.

Figure 2 present the car dealership visibility from Steese Expressway for the Diverging Diamond Interchange. The obstructed views are based on a 3.5-foot driver eye height, 31-inch tall guardrails, and a visibility to 1 foot above grade on the car lot.

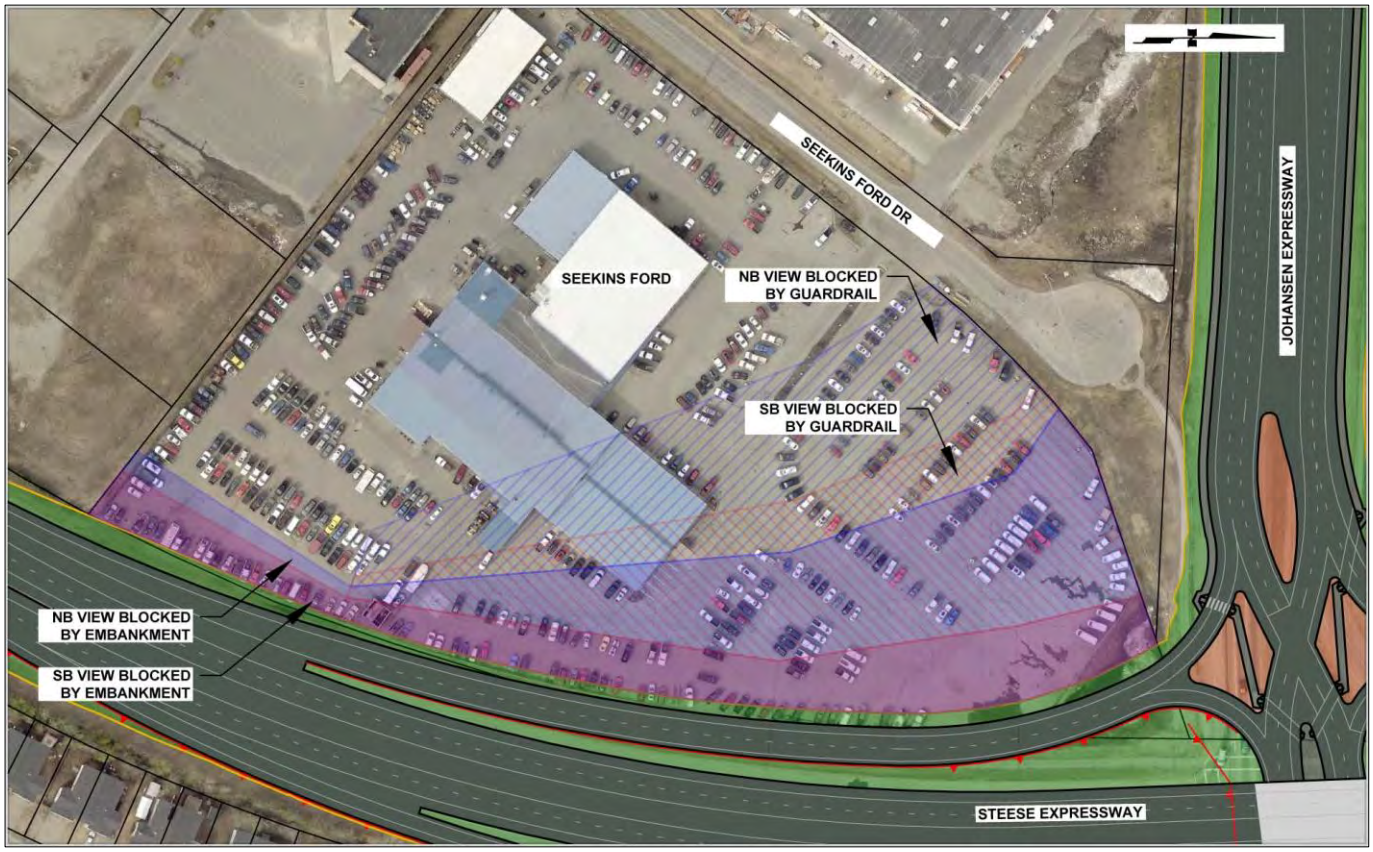

Figure 2: Car Dealership Visibility from Steese Expressway

Birch Hill Cemetery Access

Under this alternative, the southern Birch Hill Cemetery Access will be inaccessible as City Lights Boulevard will be dead ended just south of the northern Birch Hill Cemetery entrance.

Right-of-Way (ROW) Impacts

Construction of the Diverging Diamond Interchange will impact five parcels and approximately 1.5 acres of land. Attachment F presents the ROW impacts under the Diverging Diamond Interchange alternative.

Rough Order of Magnitude (ROM) Cost Estimate

The Diverging Diamond Interchange alternative is estimated to cost $50.5 million as shown in Table 1. The ROM Cost Summary is provided in Attachment G.

Table 1: Diverging Diamond Interchange ROM Cost Estimate

Category	Estimated Cost
Project Development	$6,000,000
Right of Way	$900,000
Utilities	$3,500,000
Construction Total	$40,100,000
Total Project Estimated Cost	**$50,500,000**

The above Order-of-Magnitude Estimate is in 2018 dollars based on conceptual design. Final costs of the project will depend on labor and material costs, site conditions, productivity, market conditions, scope, and other variable factors.

Attachments

A. Diverging Diamond Interchange Layout
B. Design Criteria Sheets
C. Traffic Management and Construction Phasing Plan
D. Constructability Review Memo
E. Preliminary Bridge Selection Memo
F. ROW Impacts Figure
G. ROM Cost Estimate

ATTACHMENT A

Diverging Diamond Interchange Layout

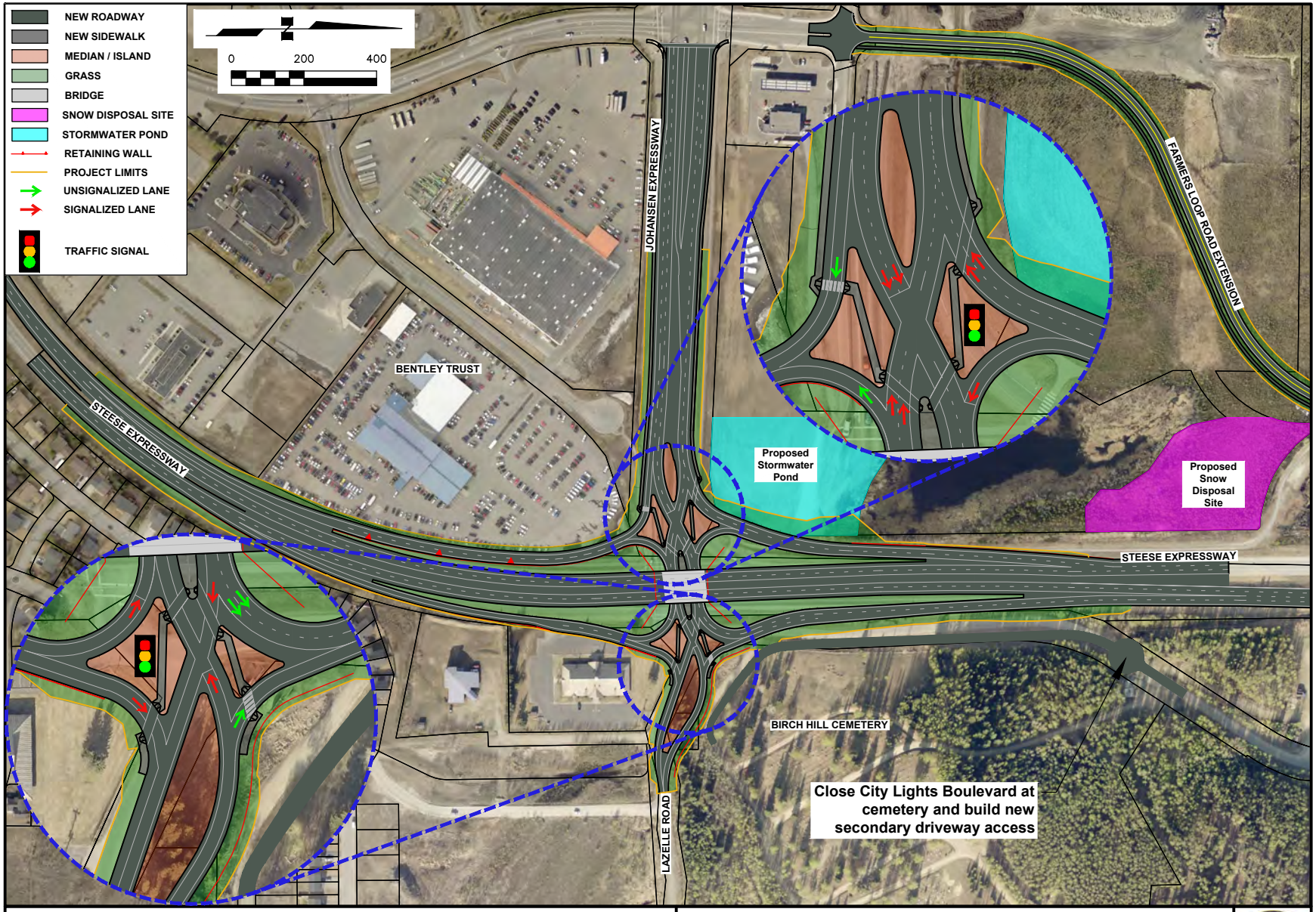

STATE OF ALASKA
DEPARTMENT OF TRANSPORTATION
AND PUBLIC FACILITIES

PROJECT NO. 0002337/Z607320000
PROJECT NAME STEESE EXPRESSWAY/JOHANSEN EXPRESSWAY INTERCHANGE: ENGINEERING & ENVIRONMENTAL SERVICES
SCALE 1" = 400' DATE: 02/26/20

Diverging Diamond Alternative

ATTACHMENT B

Design Criteria Sheets

Project Name: Steese Expressway/Johansen Expressway Interchange				
☑ New Construction/Reconstruction ☐ Reconstruction (3R) ☐ Other:				
Project Number: Z607320000/0002337			☑ NHS	☐ Non NHS
Road Name: JOHANSEN EXPRESSWAY				
Functional Classification:	Principal Arterial			
Design Year:	2045	**Present ADT:**	21,000	
Design Year ADT:	29,500	**Mid Design Period ADT:**	26,000 (2035)	
DHV:	11%	**Directional Split:**		
Percent Trucks:	8%	**Equivalent Axle Loading:**		
Pavement Design Year:	2045	**Design Vehicle:**	WB-109D	
Terrain:	Level	**Number of Roadways:**	1	
Design Speed:	60 mph (GDHS, 2011: Sect 7.3.2)			
Width of Traveled Way:	12' lanes (GDHS, 2011: Sect 7.3.3)			
Width of Shoulders:	**Outside:**	10'	**Inside:**	4'
Cross Slope:	2% (GDHS, 2011: Sect 7.3.2 (1.5-3%)			
Superelevation Rate:	6% Max (HPCM: Sect 1160.5.6)			
Minimum Radius of Curvature:	3500' Desirable (HPCM: Figure 1120-1), 1330' Min (GDHS, 2011: Table 3-9)			
Minimum K-Value for Vertical Curve:	**Sag:**	136 (SSD) (GDHS, 2011: Table 3-36)	**Crest:**	151 (SSD) / 357 (PSD) (GDHS, 2011: Table 3-34,35)
Maximum Allowable Grade:	5% (GDHS, 2011: Table 7-4)			
Minimum Allowable Grade:	0.3% Min, 0.5% Desirable (GDHS, 2011: Sect 7.3.2)			
Stopping Sight Distance:	570' (GDHS, 2011: Table 7-1)			
Lateral Offset to Obstruction:	1.5' min beyond face of curb, 3' min beyond face of curb at intersections 4' from edge of traveled way with no curb (if shoulders are less than 4') (GDHS, 2011: Sect 6.3.4)			
Vertical Clearance:	16'6" (Interchange/Grade Separation), 17'6" (Ped Structures/Bottom Signal Housing), 18'6" (Sign Bridges), 20'6" (Overhead Utilities) (HPCM: Table 1130:1)			
Bridge Width:	N/A			
Bridge Structural Capacity:	N/A			
Passing Sight Distance:	1000' (GDHS, 2011: Table 7-1)			
Surface Treatment:	**T/W:**	Asphalt Concrete	**Shoulders:**	Asphalt Concrete
Side Slope Ratios:	**Foreslopes:**	4:1	**Backslopes:**	
Degree of Access Control:	Full			
Median Treatment:	Ditch and/or Raised			
Illumination:	Continuous			
Curb Usage and Type:				
Bicycle Provisions:	Separated, min 8' wide, shared-use pathway (10' separation) and curb ramps at intersection			
Pedestrian Provisions:	Separated, min 8' wide, shared-use pathway (10' separation) and curb ramps at intersection			
Misc. Criteria:	Clear Zone: 24'-26'			

Proposed - Designer/Consultant: _____ **Date:** _____

Accepted - Engineering Manager: _____ **Date:** _____

Approved - Preconstruction Engineer: _____ **Date:** _____

Shaded criteria are the *FWHA 13 controlling criteria*. For NHS routes only, these criteria must meet the minimums established in the Green Book (*AASHTO A Policy on Geometric Design of Highways and Streets*). For all other routes, these criteria must meet the minimums established in the *Alaska Highway Preconstruction Manual*. Otherwise a Design Exception must be approved.

Design Criterion marked with a " # " do not meet minimums and have a Design Exception(s) and/or Design Waiver(s) approved. See Appendix __ for Design Exception/Design Waiver approval(s) and approved design criteria values.

Project Name: Steese Expressway/Johansen Expressway Interchange				
☑ New Construction/Reconstruction ☐ Reconstruction (3R) ☐ Other:				
Project Number: Z607320000/0002337			☑ NHS	☐ Non NHS
Road Name: STEESE EXPRESSWAY				
Functional Classification:	Principal Arterial			
Design Year:	2045	**Present ADT:**	14,000/ 25,000	
Design Year ADT: (South/North of intxn)	16,000/ 38,000	**Mid Design Period ADT:**	15,000 / 34,000 (2035)	
DHV:	11%	**Directional Split:**		
Percent Trucks:	8%	**Equivalent Axle Loading:**		
Pavement Design Year:	2045	**Design Vehicle:**	WB-109D	
Terrain:	Level	**Number of Roadways:**	2	
Design Speed:	60 mph (GDHS, 2011: Sect 7.3.2)			
Width of Traveled Way:	12' lanes (GDHS, 2011: Sect 7.3.3)			
Width of Shoulders:	**Outside:**	10'	**Inside:**	4'
Cross Slope:	2% (GDHS, 2011: Sect 7.3.2 (1.5-3%)			
Superelevation Rate:	6% Max (HPCM: Sect 1160.5.6)			
Minimum Radius of Curvature:	3500' Desirable (HPCM: Figure 1120-1), 1330' Min (GDHS, 2011: Table 3-9)			
Minimum K-Value for Vertical Curve:	**Sag:**	136 (SSD) (GDHS, 2011: Table 3-36)	**Crest:**	151 (SSD) / 357 (PSD) (GDHS, 2011: Table 3-34,35)
Maximum Allowable Grade:	5% (GDHS, 2011: Table 7-4)			
Minimum Allowable Grade:	0.3% Min, 0.5% Desirable (GDHS, 2011: Sect 7.3.2)			
Stopping Sight Distance:	570' (GDHS, 2011: Table 7-1)			
Lateral Offset to Obstruction:	1.5' min beyond face of curb, 3' min beyond face of curb at intersections 4' from edge of traveled way with no curb (if shoulders are less than 4') (GDHS, 2011: Sect 6.3.4)			
Vertical Clearance:	16'6" (Interchange/Grade Separation), 17'6" (Ped Structures/Bottom Signal Housing), 18'6" (Sign Bridges), 20'6" (Overhead Utilities) (HPCM: Table 1130:1)			
Bridge Width:	N/A			
Bridge Structural Capacity:	N/A			
Passing Sight Distance:	1000' (GDHS, 2011: Table 7-1)			
Surface Treatment:	**T/W:**	Asphalt Concrete	**Shoulders:**	Asphalt Concrete
Side Slope Ratios:	**Foreslopes:**	4:1	**Backslopes:**	
Degree of Access Control:	Full			
Median Treatment:	Ditch and/or Raised			
Illumination:	Yes			
Curb Usage and Type:				
Bicycle Provisions:	Separated, min 8' wide, shared-use pathway (10' separation) and curb ramps at intersection			
Pedestrian Provisions:	Separated, min 8' wide, shared-use pathway (10' separation) and curb ramps at intersection			
Misc. Criteria:	Clear Zone: 24'-26'			

Proposed - Designer/Consultant: _____ **Date:** _____

Accepted - Engineering Manager: _____ **Date:** _____

Approved - Preconstruction Engineer: _____ **Date:** _____

Shaded criteria are the *FWHA 13 controlling criteria*. For NHS routes only, these criteria must meet the minimums established in the Green Book (*AASHTO A Policy on Geometric Design of Highways and Streets*). For all other routes, these criteria must meet the minimums established in the *Alaska Highway Preconstruction Manual*. Otherwise a Design Exception must be approved.

Design Criterion marked with a " # " do not meet minimums and have a Design Exception(s) and/or Design Waiver(s) approved. See Appendix __ for Design Exception/Design Waiver approval(s) and approved design criteria values.

Project Name: Steese Expressway/Johansen Expressway Interchange				
☑ New Construction/Reconstruction ☐ Reconstruction (3R) ☐ Other:				
Project Number: Z607320000/0002337			☐ NHS	☑ Non NHS
Road Name: LAZELLE ROAD				
Functional Classification:	Minor Collector			
Design Year:	2045	**Present ADT:**	1,300	
Design Year ADT:	9,800	**Mid Design Period ADT:**	8,800 (2035)	
DHV:	11%	**Directional Split:**		
Percent Trucks:		**Equivalent Axle Loading:**		
Pavement Design Year:		**Design Vehicle:**	WB-67	
Terrain:	Level	**Number of Roadways:**	1	
Design Speed:	30 mph (GDHS, 2011: Sect 6.3.1)			
Width of Traveled Way:	12' (GDHS, 2011: Sect 6.3.2)			
Width of Shoulders:	**Outside:**	8' (GDHS, 2011: Table 6-5)	**Inside:**	
Cross Slope:	2% (GDHS, 2011: Sect 6.3.1)			
Superelevation Rate:	6% Max (HPCM: Sect 1160.5.6)			
Minimum Radius of Curvature:	350' Desirable (HPCM: Figure 1120-1), 231' Min (GDHS, 2011: Table 3-7)			
Minimum K-Value for Vertical Curve:	**Sag:**	37 (SSD)	**Crest:**	19 (SSD) / 89 (PSD)
Maximum Allowable Grade:	9% (GDHS, 2011: Table 6-8)			
Minimum Allowable Grade:	0.3% Min, 0.5% Desirable			
Stopping Sight Distance:	200' (GDHS, 2011: Table 3-34)			
Lateral Offset to Obstruction:	1.5' min beyond face of curb, 3' min beyond face of curb at intersections 4' from edge of traveled way with no curb (if shoulders are less than 4')			
Vertical Clearance:	15' (Ped/Bicycle Structures/Sign Bridges), 14' (Underpasses) (GDHS, 2011: Sect 6.3.3)			
Bridge Width:	N/A			
Bridge Structural Capacity:	N/A			
Passing Sight Distance:	500' (GDHS, 2011: Table 3-35)			
Surface Treatment:	**T/W:**	Asphalt Concrete	**Shoulders:**	Asphalt Concrete
Side Slope Ratios:	**Foreslopes:**	4:1 or flatter	**Backslopes:**	3:1 or flatter
Degree of Access Control:	None			
Median Treatment:	Ditch and/or Raised			
Illumination:				
Curb Usage and Type:				
Bicycle Provisions:	Separated, min 8' wide, shared-use pathway (10' separation) and curb ramps at intersection			
Pedestrian Provisions:	Separated, min 8' wide, shared-use pathway (10' separation) and curb ramps at intersection			
Misc. Criteria:	Clear Zone: 12-14'			

Proposed - Designer/Consultant: _____ **Date:** _____

Accepted - Engineering Manager: _____ **Date:** _____

Approved - Preconstruction Engineer: _____ **Date:** _____

Shaded criteria are the *FWHA 13 controlling criteria*. For NHS routes only, these criteria must meet the minimums established in the Green Book (*AASHTO A Policy on Geometric Design of Highways and Streets*). For all other routes, these criteria must meet the minimums established in the *Alaska Highway Preconstruction Manual*. Otherwise a Design Exception must be approved.

Design Criterion marked with a " # " do not meet minimums and have a Design Exception(s) and/or Design Waiver(s) approved. See Appendix __ for Design Exception/Design Waiver approval(s) and approved design criteria values.

ATTACHMENT C

Traffic Management and Construction Phasing Plan

DATE: November 29, 2019

SUBJECT: Diverging Diamond Interchange – Traffic Management and Construction Phasing Plan

This memo is the conceptual traffic management and construction phasing plan for the Diverging Diamond Interchange alternative. In this plan the Diverging Diamond Interchange is constructed in six separate phases. A description of how existing traffic is maintained and which elements are to be constructed are shown under each phase. The existing roadways for the Steese Expressway/Johansen Expressway intersection are shown in Figure 1. The plan assumes the following:

- Build interchange ramps and retaining walls first to temporarily carry Steese Expressway traffic
- At least two continually maintained through lanes in each direction are required for the Steese Expressway
- Unless another detour route is provided, at least two continually maintained eastbound Johansen Expressway to northbound Steese Expressway turn lanes are required
- Lazelle Road traffic can be temporarily closed and detoured to other access points for night time or weekend road closures

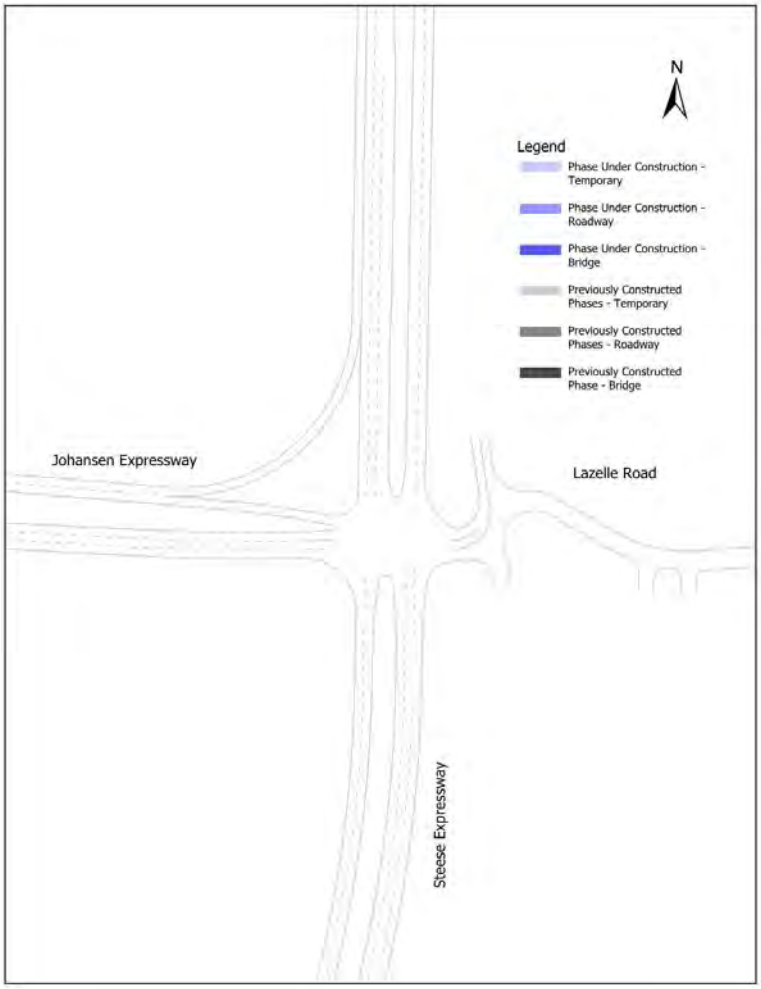

Figure 1: Existing Roadways

Phase 1

Maintenance of Traffic

In this phase of construction, the Steese Expressway and Johansen Expressway traffic will have minimal impacts. Traffic will run normally with the existing traffic signal. Temporary northbound and southbound connections between the on and off ramps will be constructed, traffic may be detoured if needed on existing shoulders during construction. Access to Lazelle Road will be closed at the intersection for all phases of construction; D Street can be used as secondary access to this area. City Lights Boulevard will be dead ended north of the intersection, City Lights Boulevard can be accessed from the Farmers Loop/ Steese Expressway intersection.

Construction Activities

Construction under this phase will include the following activities and is shown in Figure 2.

- Steese Expressway southbound and northbound entrance and exit ramps
- Temporary southbound and northbound through lanes (for use in next phases of construction)
- Temporary signals (for use in next phases of construction)
- City Lights Boulevard will be dead ended south of the northern Birch Hill Cemetery entrance.
- Lazelle Road access from the intersection will be closed

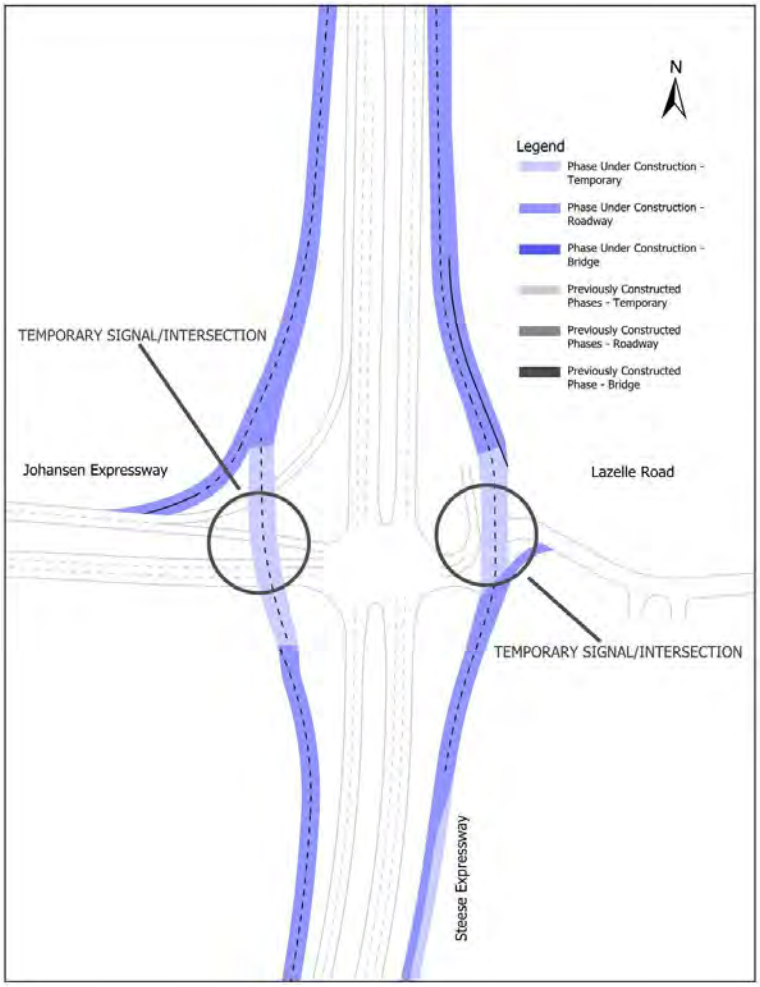

Figure 2: Phase 1 Construction

Phase 2

Maintenance of Traffic

In this phase of construction, the Steese Expressway traffic will be detoured off of the Steese Expressway onto the new southbound and northbound entrance and exit ramps constructed in Phase 1. Southbound and northbound through movements will use the previously constructed temporary roads. Traffic will interact like a tight diamond configuration at two temporary intersections controlled by temporary traffic signals. Northbound left traffic will be detoured at the Trainor Gate/Steese Expressway intersection to the Old Steese Expressway/ Johansen Expressway intersection for the remainder of construction.

Construction Activities

Construction under this phase will include the following activities and is shown in Figure 3.

- North leg of the Steese Expressway and north bridge abutments

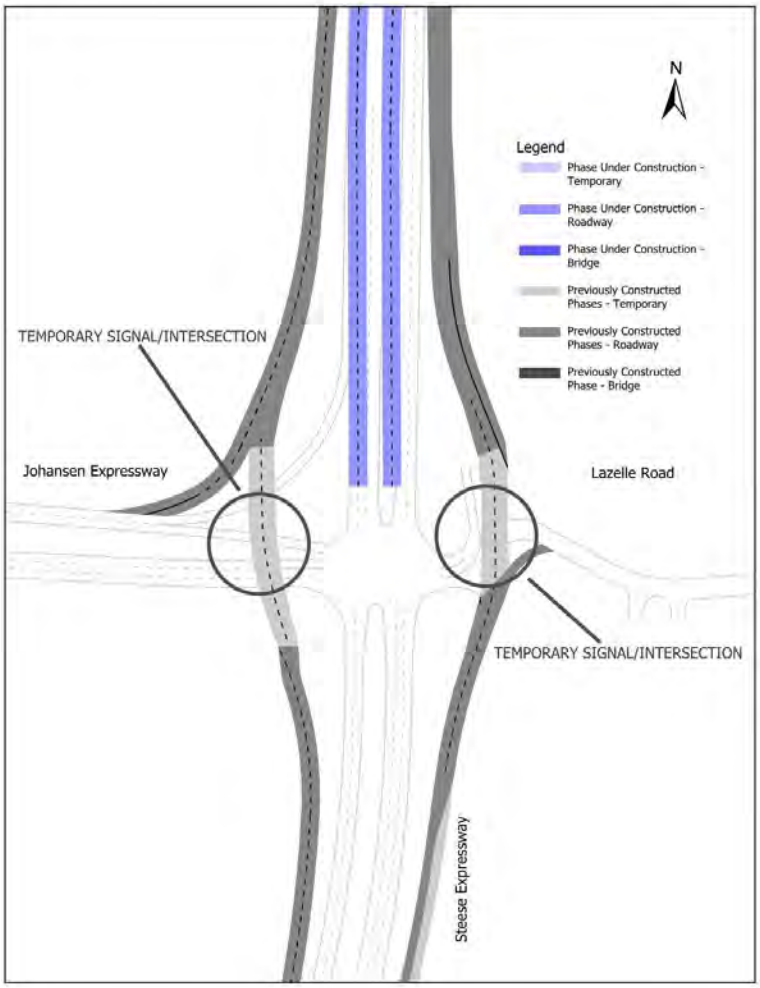

Figure 3: Phase 2 Construction

Phase 3

Maintenance of Traffic

In this phase of construction, traffic will continue to interact like a tight diamond configuration at two temporary intersections controlled by temporary traffic signals. The Steese Expressway will remain routed onto the newly built ramp lanes.

Construction Activities & Considerations

Construction under this phase will include the following activities and is shown in Figure 4.

- Eastbound portion of crossover
- Lazelle Road

Construction considerations under this phase may include the following.

- Issues are expected getting traffic to weave through the construction zone during the switch over

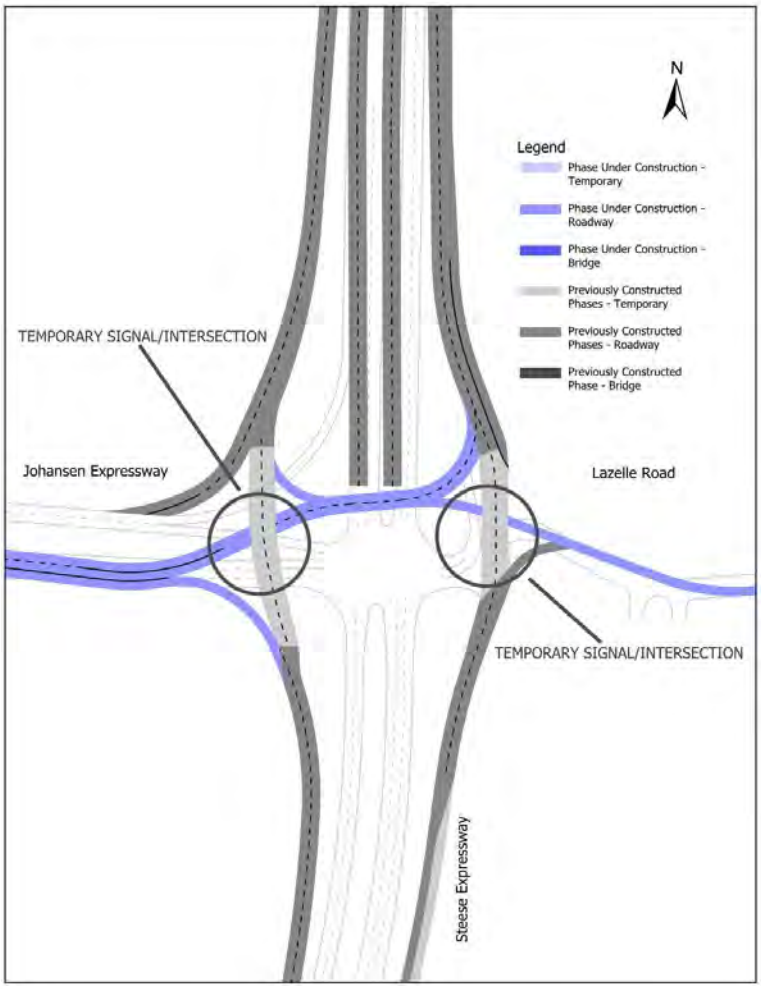

Figure 4: Phase 3 Construction

Phase 4

Maintenance of Traffic

In this phase of construction, traffic will continue to interact like a tight diamond configuration at two temporary intersections controlled by temporary traffic signals. The Steese Expressway will remain routed onto the newly built ramp lanes.

Construction Activities

Construction under this phase will include the following activities and is shown in Figure 5.

- South leg of the Steese Expressway and south bridge abutments

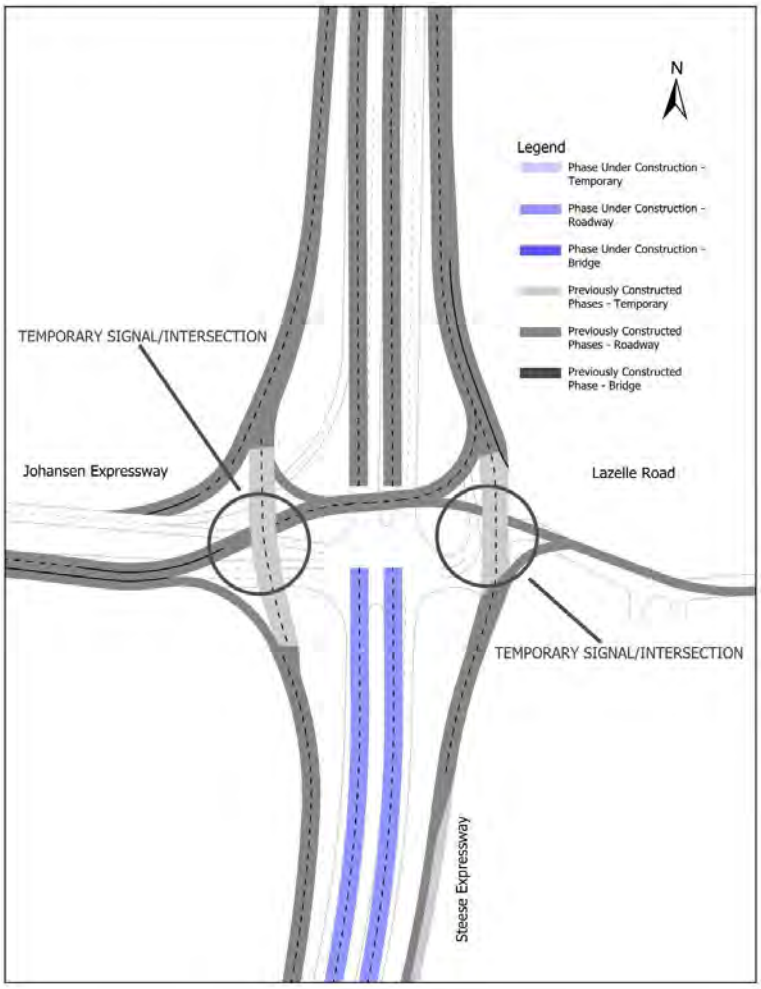

Figure 5: Phase 4 Construction

Phase 5

Maintenance of Traffic

In this phase of construction, traffic will continue to interact like a tight diamond configuration at two temporary intersections controlled by temporary traffic signals. The Steese Expressway will remain routed onto the newly built ramp lanes. The Steese Expressway bridge over the Johansen Expressway will be built with night closures.

Construction Activities & Considerations

Construction under this phase will include the following activities and is shown in Figure 6.

- Steese Expressway Bridge over Johansen Expressway.

Construction considerations under this phase may include the following.

- Conflicts are expected during the girder erection and concrete deck placement, requiring night work and closures
- Building the southbound structure early so southbound traffic can drive on the structure instead of on the ramps can potentially reduce construction/traffic conflicts

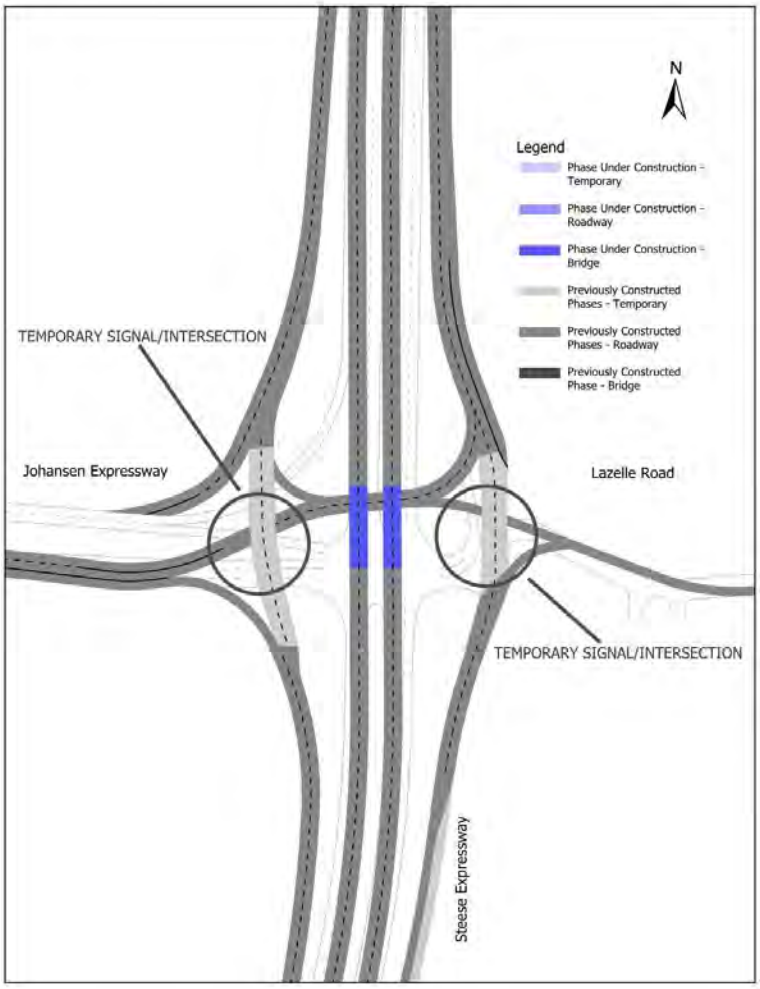

Figure 6: Phase 5 Construction

Phase 6

Maintenance of Traffic

In this phase of construction, the Steese Expressway traffic will be routed back onto the newly built Steese Expressway. Eastbound left traffic will use the crossover built in Phase 3, northbound left will remain on the detour route, and southbound right traffic will continue to use the newly built southbound ramp.

Construction Activities

Construction under this phase will include the following activities and is shown in Figure 7.

- Westbound portion of the crossover
- Final Crossover intersections and ramp intersections
- Traffic Signals

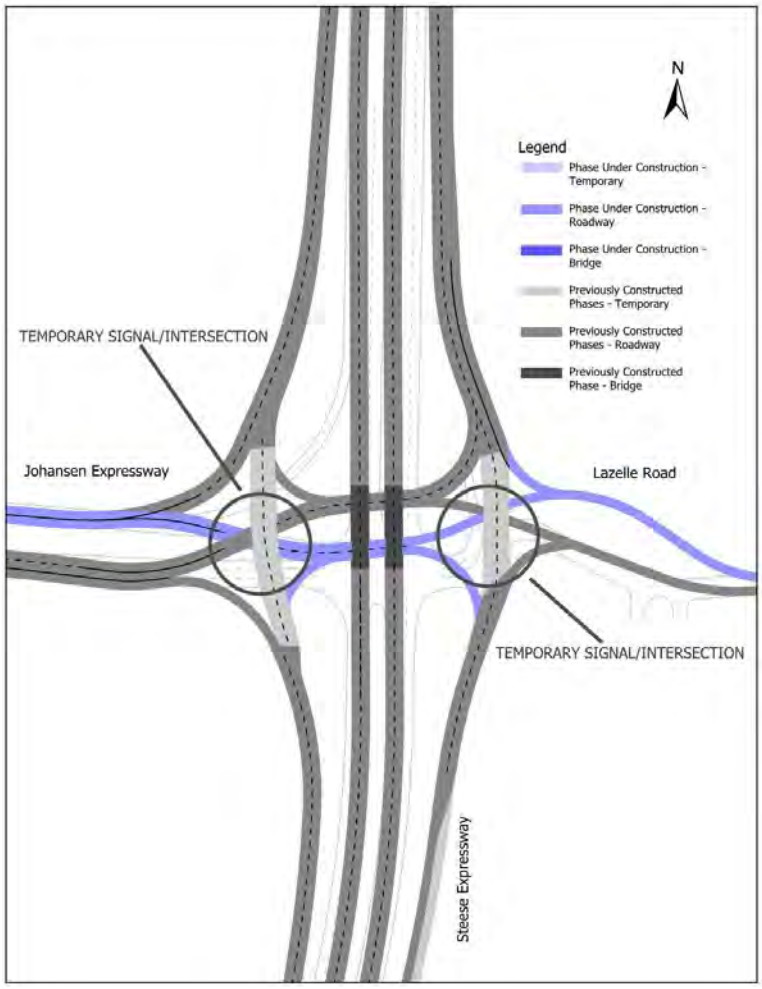

Figure 7: Phase 6 Construction

Final Configuration

The final Steese Expressway/ Johansen Expressway Diverging Diamond lane configuration is shown in Figure 8.

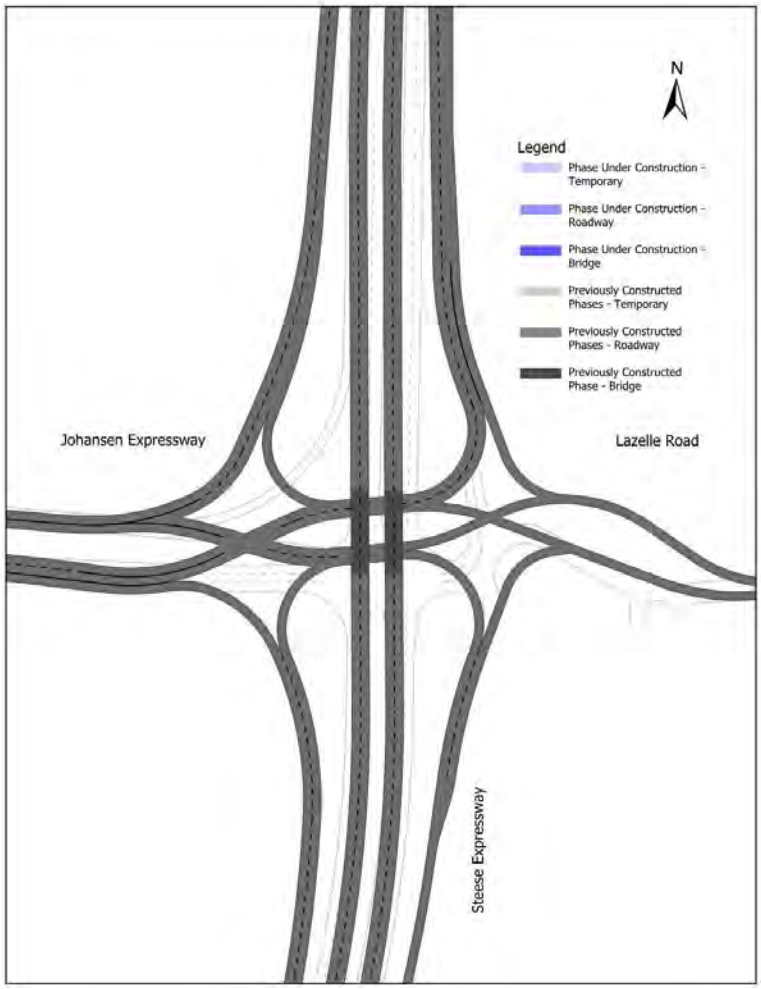

Figure 8: Final Configuration

ATTACHMENT D

Constructability Review Memo

DATE: November 29, 2019

SUBJECT: BAE7: Constructability Review

The four design alternatives (Tight Diamond Interchange, Diverging Diamond Interchange, Echelon Interchange, and Farmers Loop Road Extension) were evaluated to identify constructability concerns.

Comments are broken into four categories:

- Traffic: This is an overall discussion of possible detour routes from a contractor's point of view.
- Yard: Suggested yard sites that work for all options.
- Properties: Properties most likely to be impacted by contractor operations.
- Project Construction: Comments on individual memos.

Traffic

The Farmers Loop Road Extension, when combined with any of the interchange alternatives, can be used as a temporary detour during construction to relieve or divert traffic to facilitate quicker and less expensive construction.

Lazelle Road should be closed during construction. Lazelle Road, Old Birch Hill Road, and Beacon Road traffic could be detoured through D Street and Canol Service Road. Additional signage will be required at College Road and Old Steese Highway suggesting those be used as detours to soften the traffic flow at the interchange. Note that traffic capacity impacts are evaluated under memo BAE8: Construction Detour Traffic Impacts.

The Lazelle Road churches can be accessed off the D street extension with minimal effort. The project contractor may pursue additional property owner agreements for staging areas in this area, and the project team should evaluate use of Temporary Construction Easements (TCE) for work space/staging.

The Birch Hill Cemetery can easily be accessed off City Lights Boulevard from the north during construction.

Steese Expressway traffic can be maintained both directions most of the time barring girder erection and deck pour operations.

Figure 1 presents proposed detour routes for closed movements and potential staging/laydown yards.

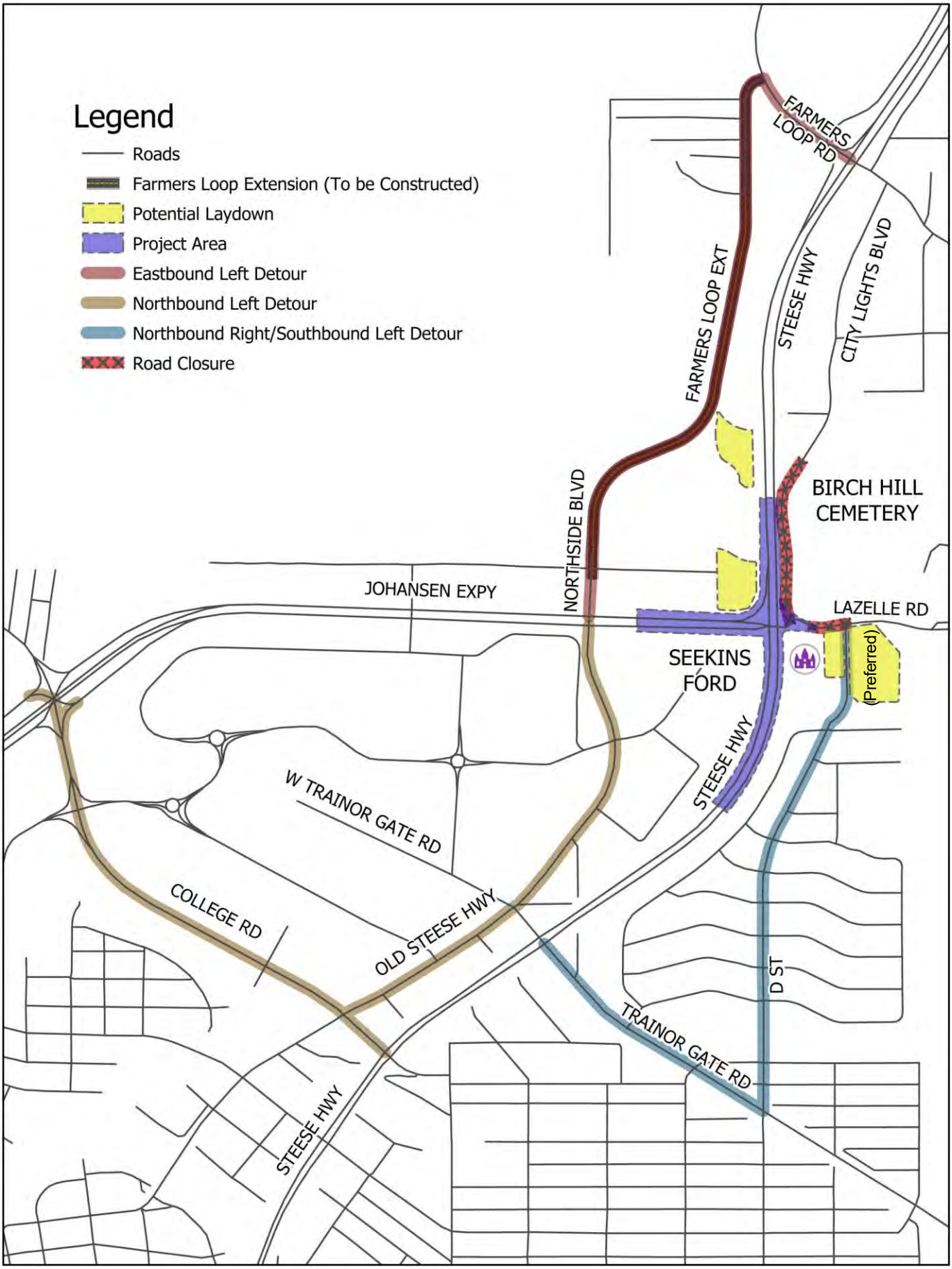

Figure 1: Proposed Detour Routes and Potential Staging/Laydown Yards

Yards

The optimum yard location would be in the field southeast of the Lazelle Road churches. This area is even more favorable if Lazelle Road could be closed or reduced to limited access. The area is out of the way of main traffic flows and would be great for staging girders, offices, fab yards etc. The property is currently owned by the City of Fairbanks.

In addition, the area north of the interchange currently slated for the storm water pond could be temporarily used for staging and laydown provided the area is not too wet. The western portion of this same property could work as well if water is an issue on the east end.

These two areas are prime for any contractor as they are adjacent to the work site and would help materials, labor and management avoid conflict with the traveling public. Staging/laydown yards outside the immediate area will complicate all aspects of the project, slowing productions and increasing price.

There are some possible locations further west on Johansen Expressway along the north side of Harold Bentley Avenue, but access and egress may negatively affect local business. Looking for space south on Steese Expressway is not advisable as this obviously increases the contractor/traveling public conflict as you encroach into thicker residential/business locations. Searching north on Steese Expressway shows no reasonably close areas with proper access to the expressway.

Figure 1 presents the potential staging/laydown yards.

Property issues

The car dealership has some unique impacts to consider. There will be TCE's required on two sides of the property based on the current design. Visibility and vehicle storage during construction may be areas of concern. The two churches and cemetery may have concerns with construction traffic in the immediate area along with potential TCE's and access changes to their properties. Based on the location and potential impacts, the churches and cemetery may prefer to have direct contractor/landowner agreements once the project is awarded.

Project Construction

Discussion on the constructability of the four alternatives are found in the individual Build Alternative Impact (BAI) memos. The interchange alternatives have a significant amount of roadway work, which increase the weather-related risks and potential schedule delays.

No matter what option is chosen, a few key factors will influence the success of this project.

1. Location of the yard(s) for staging, laydown, fabrication and offices is critical. The two areas described are prime locations and will be worth the effort to obtain access.
2. Heavily restricting public access or preferably closing Lazelle Road detouring onto D Street or Canol Service Road will be a huge help in controlling traffic through and around the project.
3. Suggesting a phasing plan with the option for a contractor to modify with approval may lead to a shorter construction duration and less impact to the traveling public.
4. Except for the Echelon option, the structures proposed are straight forward and should encourage competitive pricing. The Echelon structure has its merits and is a viable contender for this interchange, but it is crucial that the right fabricator is used as inexperience could lead to serious construction issues.

ATTACHMENT E

Preliminary Bridge Selection Memo

MEMORANDUM

DATE: November 27, 2019

SUBJECT: Steese-Johansen Expressways Interchange: Preliminary Bridge Selection Memorandum - Diverging Diamond Interchange

Prepared are the preliminary General Layout drawings for the Steese Johansen Interchange Diverging Diamond Interchange crossing. Three bridge options have been developed for consideration.

A summary and list of advantages and disadvantages for each option is provided in the following pages.

MSE walls have been selected to contain fill slopes from spilling into adjacent ramp roadways.

Consideration for options were made for both vertical and spill through abutments.

Based on the list of advantages and disadvantages the recommended option is Option 1, the Single Span Deck Bulb-Tee. The Single Span Deck Bulb-Tee has the shortest span, lowest initial cost, and is a common structure type that is familiar to contractors throughout Alaska.

Assumptions

Maintain a minimum vertical under clearance of 19’-0”.

Foundation types for the bridges are assumed to be supported on deep foundations (i.e. piles at the abutments with spill through soils retained by MSE walls).

Option 1 – Diverging Diamond with Single Span Deck Bulb-Tee

Maximum span length: 138.50 feet

Effective superstructure depth: 6.75 feet

Minimum vertical clearance under bridge: 19.00 feet

Distance between face of MSE walls: 122.20 feet

Table 1: Diverging Diamond Single Span Deck Bulb-Tee Advantages and Disadvantages

Advantages	Disadvantages
Lowest initial construction cost	Long, heavy girders will require larger crane(s) to erect
Durable structure type	MSE walls fix the available width for future roadway section changes to Johansen Expressway
Little future maintenance	
Common structure type that is familiar to contractors throughout Alaska	
Provides unobstructed view under the bridge	
Shortest bridge option	
Requires the least time to construct	

Figure 1: Similar structure Steese Highway over Chena Hot Springs Road, looking West.

STATE	PROJECT DESIGNATION	YEAR	SHEET NO.	TOTAL SHEETS
ALASKA		2019		

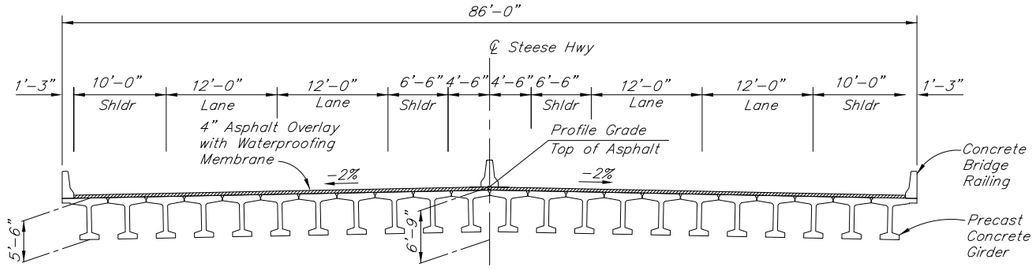

TYPICAL SECTION

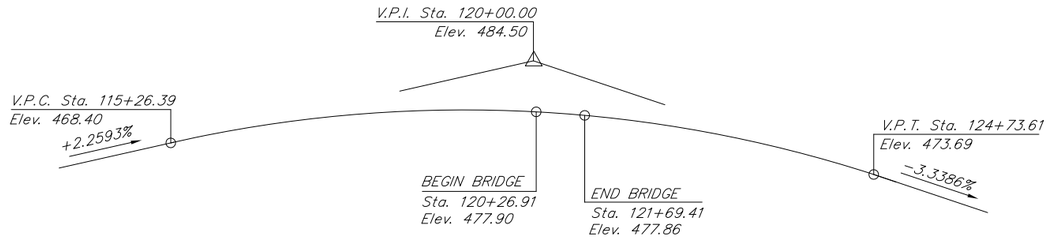

PROFILE GRADE DATA

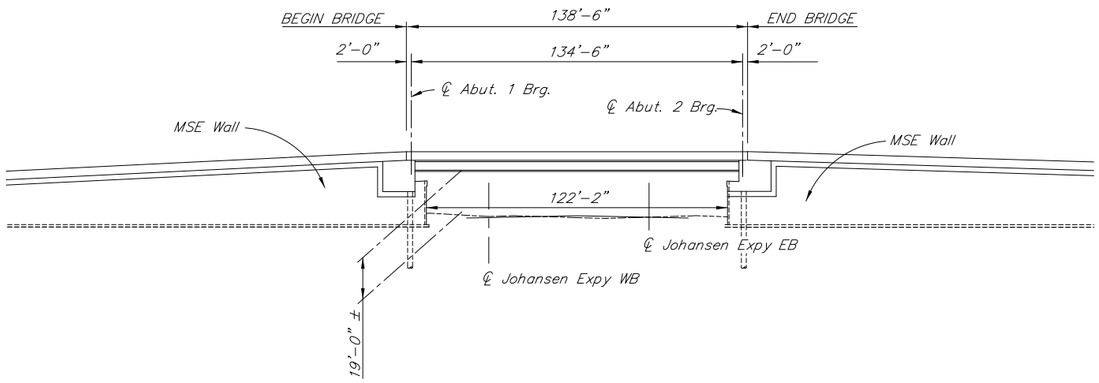

ELEVATION

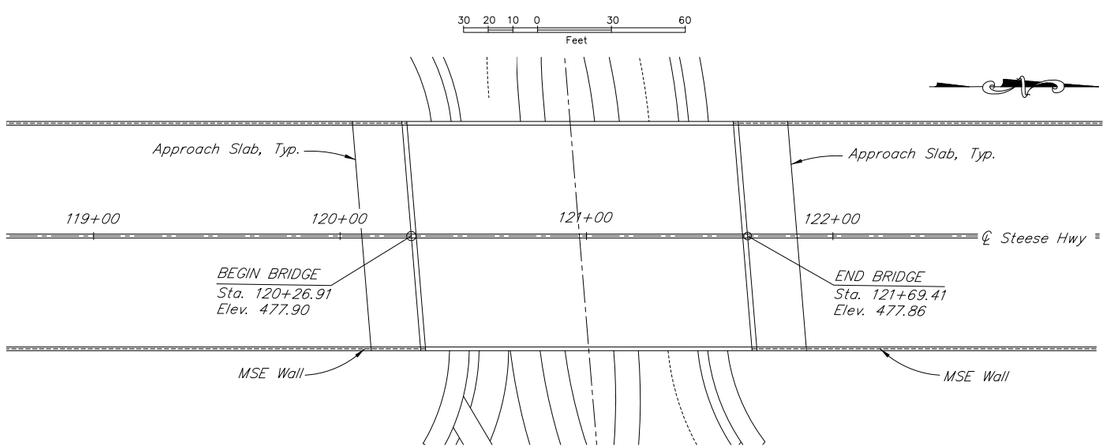

PLAN

30 20 10 0 30 60
Feet

GENERAL NOTES

DESIGN:..... AASHTO LRFD Bridge Design Specifications, 2017 Edition, with latest interim specifications.

Seismic design per AASHTO Guide Specifications for LRFD Seismic Bridge Design, 2011 with latest interim revisions.

LIVE LOAD:..... HL-93

DEAD LOAD:..... Includes 50 psf for all wearing surfaces.

SEISMIC PARAMETERS:..... PGA = 0.27
Ss = 0.65
S1 = 0.20
Site Class = D
Liquefaction Potential = Low
AASHTO 7% probability of ascendance in 75 years.

REINFORCEMENT:..... ASTM A706, Grade 60, Fy = 60,000 psi
ASTM A970 Headed bars, Class HA.
Space reinforcement evenly unless otherwise noted.

PRESTRESSED CONCRETE:..... See "GIRDERS" Dwg.

CONCRETE:..... Class A Concrete unless otherwise noted, f'c = 4,000 psi

STRUCTURAL STEEL:..... ASTM A709, Grade 36T3, Fy = 36,000 psi
Galvanize structural steel in accordance with AASHTO M111 unless shown otherwise.

PRELIMINARY PLAN

DESIGNED BY:	E. Thornley	CHECKED:	Checker	FOUNDATIONS REVIEWED BY:	Engineer
DRAWN BY:	E. Thornley	CHECKED:	Designer		
QUANTITIES BY:	J. Travis	CHECKED:	Checker		

JOHANSEN EXPRESSWAY UNDERCROSSING

STEESE HIGHWAY

OPTION 1 GENERAL LAYOUT

BRIDGE NO.

DWG. NO.

Option 2 – Diverging Diamond with Single Span Steel Girder

Maximum span length: 200.00 feet

Effective superstructure depth: 10.50 feet

Minimum vertical clearance under bridge: 19.00 feet

Distance between toe of slope protection: 125.00 feet

Table 2: Diverging Diamond Single Span Steel Girder Advantages and Disadvantages

Advantages	Disadvantages
Provides long, clear span that will accommodate future widening of Johansen Expressway	Highest initial construction cost
Provides unobstructed view below bridge	Long, heavy girders may require larger crane(s) to erect or temporary bents at bolted splice locations
Durable structure type	Contractors in Alaska are not as familiar with steel girder bridges with cast-in-place concrete bridge decks
	Construction staging requires more attention for half-width construction
	Steel girder bridges require more maintenance than precast concrete bridges
	Requires profile grade raise of the Steese Highway
	Requires longest time to construct

Figure 2: Similar structure Johansen Expressway over College Road, looking North.

STATE	PROJECT DESIGNATION	YEAR	SHEET NO.	TOTAL SHEETS
ALASKA		2019		

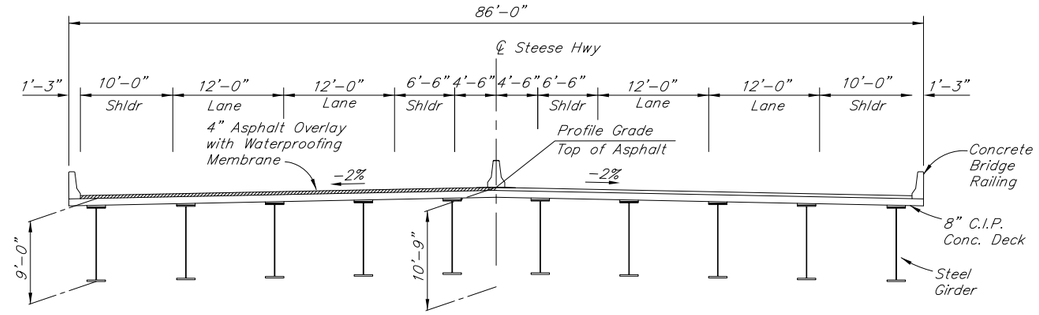

TYPICAL SECTION

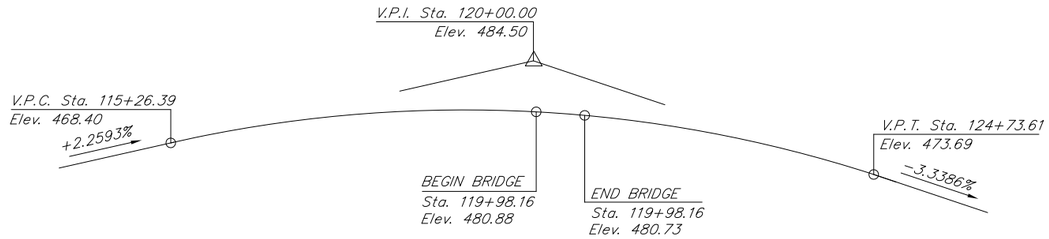

PROFILE GRADE DATA

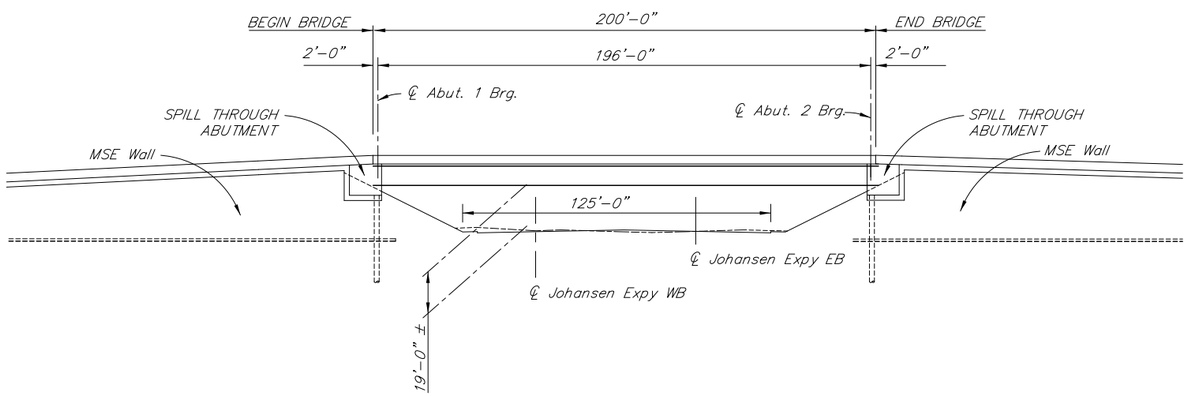

ELEVATION

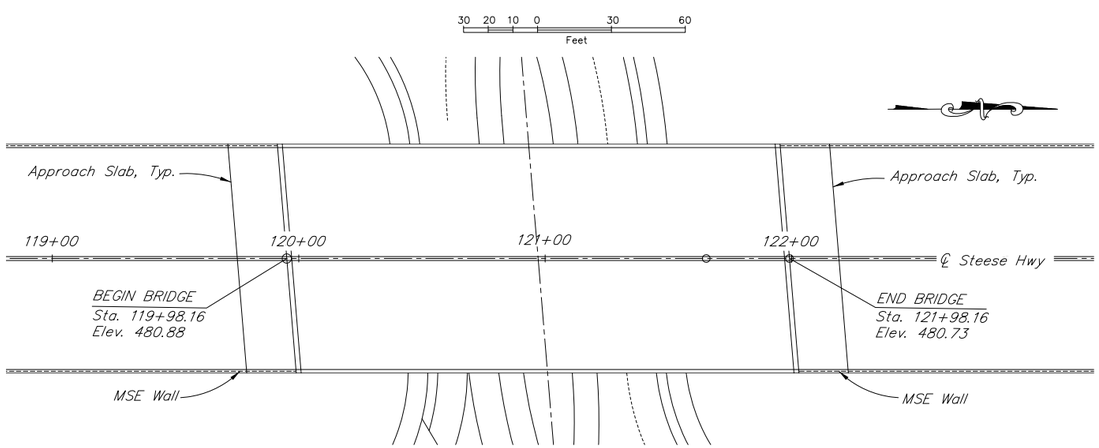

PLAN

30 20 10 0 30 60
Feet

GENERAL NOTES

DESIGN:..... AASHTO LRFD Bridge Design Specifications, 2017 Edition, with latest interim specifications.

Seismic design per AASHTO Guide Specifications for LRFD Seismic Bridge Design, 2011 with latest interim revisions.

LIVE LOAD:..... HL-93

DEAD LOAD:..... Includes 50 psf for all wearing surfaces.

SEISMIC PARAMETERS:..... PGA = 0.27
Ss = 0.65
S1 = 0.20
Site Class = D
Liquefaction Potential = Low
AASHTO 7% probability of ascendance in 75 years.

REINFORCEMENT:..... ASTM A706, Grade 60, Fy = 60,000 psi
Space reinforcement evenly unless otherwise noted.

CONCRETE:..... Class A Concrete unless otherwise noted, f'c = 4,000 psi

STRUCTURAL STEEL:..... ASTM A709, Grade 50T3, Fy = 50,000 psi or American Petroleum Institute (API) 5L X52 PSL2

HIGH STRENGTH BOLTS:..... ASTM A320, Grade L7, Fult = 120,000 psi

PRELIMINARY PLAN

DESIGNED BY: E. Thornley	CHECKED: Checker	FOUNDATIONS REVIEWED BY: Engineer		
DRAWN BY: E. Thornley	CHECKED: Designer			
QUANTITIES BY: J. Travis	CHECKED: Checker			

JOHANSEN EXPRESSWAY UNDERCROSSING

STEESE HIGHWAY

OPTION 2 GENERAL LAYOUT

BRIDGE NO.

DWG. NO.

Option 3 – Diverging Diamond with Two Span Deck Bulb-Tee

Maximum span length: 98.00 feet

Effective superstructure depth: 4.75 feet

Minimum vertical clearance under bridge: 19.00 feet

Distance between toe of slope protection: 147 feet

Table 3: Diverging Diamond Two Span Deck Bulb-Tee Advantages and Disadvantages

Advantages	Disadvantages
Requires the smallest effective superstructure depth	Requires intermediate support in median which may obstruct visibility under the bridge
Provides additional horizontal clearance that will accommodate future widening of Johansen Expressway	Additional time and cost to install pier
Common structure type that is familiar to contractors throughout Alaska	Requires piles at the abutment so that the foundations are the same type (i.e. mitigation of differential settlement issues)
Durable structure type	
Requires little future maintenance	
Requires the smallest effective superstructure depth	

Figure 3: Similar structure Seward Highway over O'Malley Road, looking East.

STATE	PROJECT DESIGNATION	YEAR	SHEET NO.	TOTAL SHEETS
ALASKA		2019		

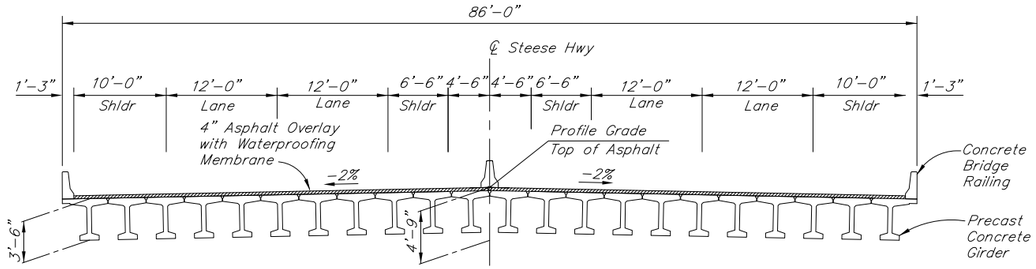

TYPICAL SECTION

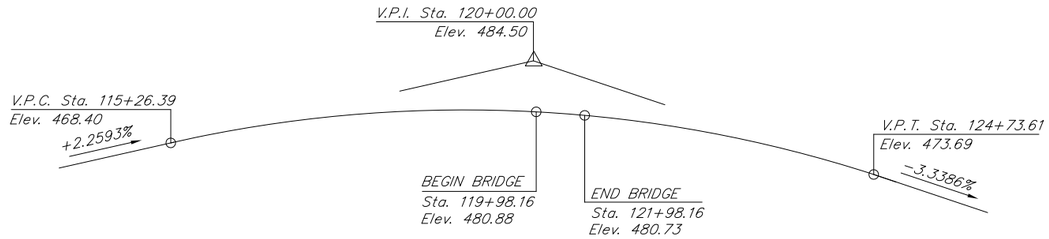

PROFILE GRADE DATA

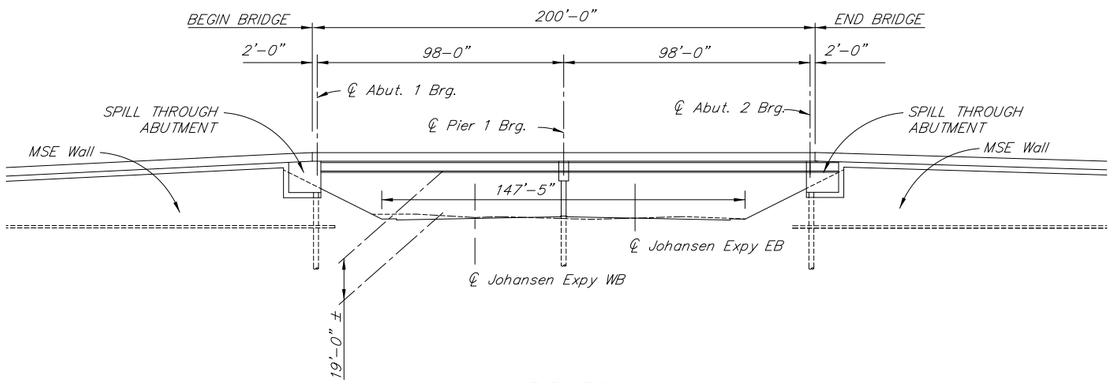

ELEVATION

30 20 10 0 30 60
Feet

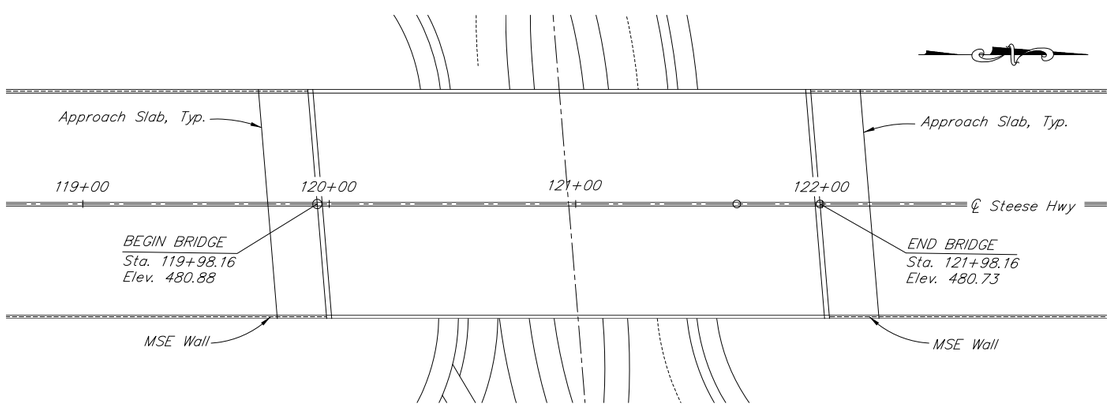

PLAN

30 20 10 0 30 60
Feet

GENERAL NOTES

DESIGN:..... AASHTO LRFD Bridge Design Specifications, 2017 Edition, with latest interim specifications.

Seismic design per AASHTO Guide Specifications for LRFD Seismic Bridge Design, 2011 with latest interim revisions.

LIVE LOAD:..... HL-93

DEAD LOAD:..... Includes 50 psf for all wearing surfaces.

SEISMIC PARAMETERS:..... PGA = 0.27
Ss = 0.65
S1 = 0.20
Site Class = D
Liquefaction Potential = Low
AASHTO 7% probability of ascendance in 75 years.

REINFORCEMENT:..... ASTM A706, Grade 60, Fy = 60,000 psi
ASTM A970 Headed bars, Class HA.
Space reinforcement evenly unless otherwise noted.

PRESTRESSED CONCRETE:..... See "GIRDERS" Dwg.

CONCRETE:..... Class A Concrete unless otherwise noted, f'c = 4,000 psi

STRUCTURAL STEEL:..... ASTM A709, Grade 36T3, Fy = 36,000 psi
Galvanize structural steel in accordance with AASHTO M111 unless shown otherwise.

PRELIMINARY PLAN

DESIGNED BY:	E. Thornley	CHECKED:	Checker	FOUNDATIONS REVIEWED BY:	Engineer
DRAWN BY:	E. Thornley	CHECKED:	Designer		
QUANTITIES BY:	J. Travis	CHECKED:	Checker		

JOHANSEN EXPRESSWAY UNDERCROSSING

STEESE HIGHWAY

OPTION 3 GENERAL LAYOUT

BRIDGE NO.

DWG. NO.

ATTACHMENT F

Right-of-Way Impacts Figure

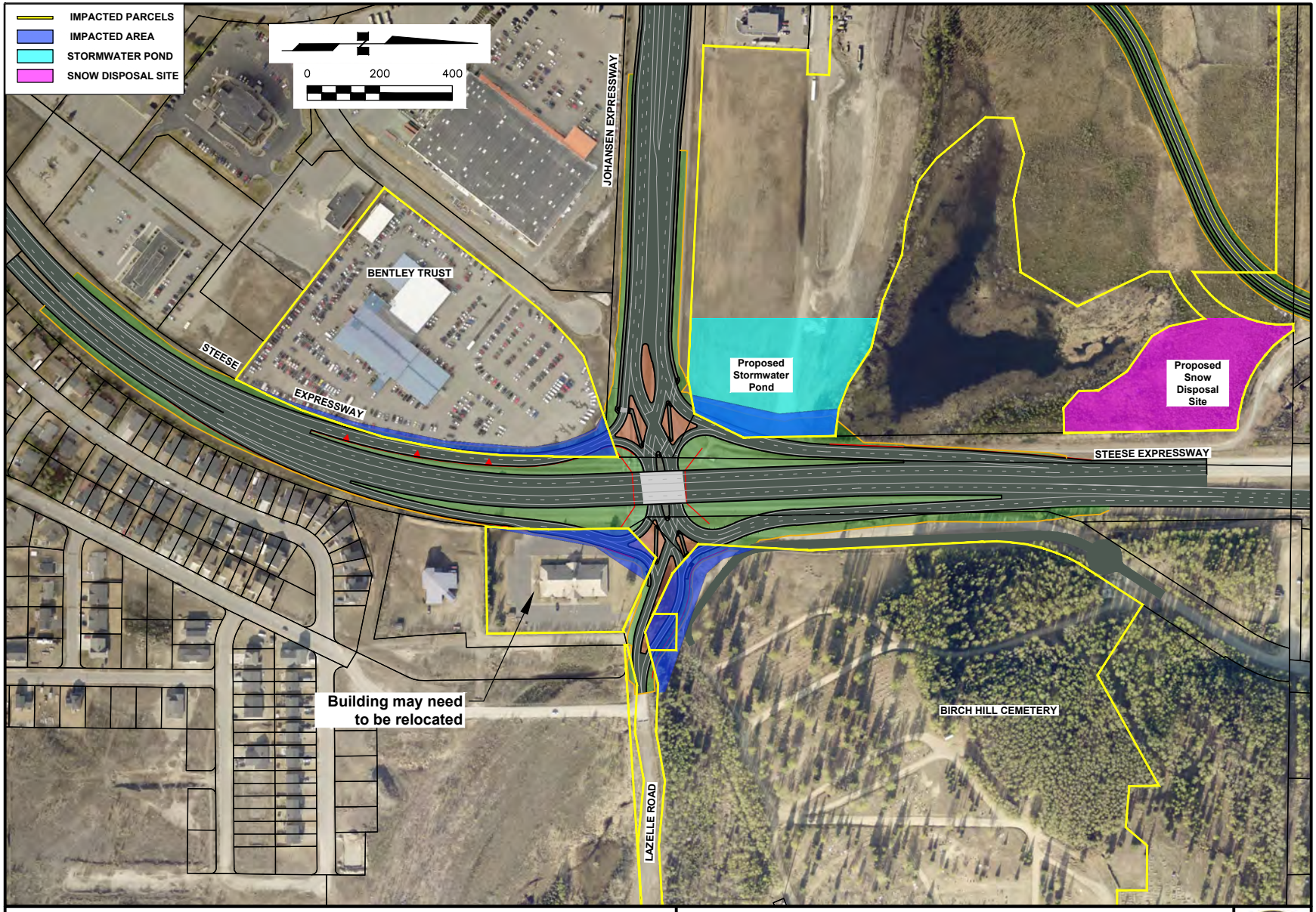

STATE OF ALASKA
DEPARTMENT OF TRANSPORTATION
AND PUBLIC FACILITIES

PROJECT NO. 0002337/Z607320000
PROJECT NAME STEESE EXPRESSWAY/JOHANSEN EXPRESSWAY INTERCHANGE: ENGINEERING & ENVIRONMENTAL SERVICES
SCALE 1" = 400' DATE: 02/26/20

Diverging Diamond Alternative

ATTACHMENT G

Rough Order of Magnitude Cost Estimate

ORDER OF MAGNITUDE COST

Project Name: Steese Expressway/Johansen Expressway Interchange **Date:** 7/19/2019
Location: Fairbanks, AK
Description: Alternate G3 Diverging Diamond Interchange

Instructions: 1. Enter Project Quantities in Yellow boxes. 2. Unit Costs & Percentages shown in red may be modified.

I. PROJECT DEVELOPMENT (Phase 2 Funds)							
Design Total (Environmental Doc., Permits, Preliminary Engineering, Final Design, Assist During Bidding)			15%	(Of Line 39)			**$ 6,000,000**
II. RIGHT OF WAY (Phase 3 Funds)		Unit	Quantity	Unit Cost	Total		
1 Land Acquisition	Residential	ACRE		$ 100,000	$ -		
	Commercial	ACRE	1.4	$ 450,000	$ 630,000		
2 Mitigation Costs		# Parcels	4	$ 15,000	$ 60,000		
3 Full/Partial Building Take		SF		$ 200	$ -		
4 Demolition/Business Relocation		EA		$ 350,000	$ -		
5 Acquisition/Admin. Costs (per Parcel)		EA	4	$ 10,000	$ 40,000		
6 Others/Contingency		EST	25%	of above	$ 182,500		
7 **Right-of-Way Total** (Lines 1-6)							**$ 900,000**
III. UTILITIES (Phase 7 Funds)		Unit	Quantity	Unit Cost	Total		
8 Utility Modifications Costs	Utility Corridor	MILE		$ 8,000,000	$ -		
	Urban	MILE		$ 4,000,000	$ -		
	Semi Urban	MILE		$ 2,000,000	$ -		
	Rural	MILE	3.4	$ 700,000	$ 2,412,879		
9	Total Above				$ 2,412,879		
10 Engineering Costs 15%	(Of Line 9)				$ 361,932		
11 Administration 15%	(Of Line 9)				$ 361,932		
12 Construction Eng 15%	(Of Line 9)				$ 361,932		
13 **Utilities Total** (Lines 8-12)							**$ 3,500,000**
IV. CONSTRUCTION (Phase 4 Funds)		Unit	Quantity	Unit Cost	Total		
14 Demolition/Clearing		ACRE	1	$ 15,000	$ 21,000		
15 Earthwork		CY	302,969	$ 7	$ 2,120,783		
16 Urban Section	# Lanes:	LANE MILE		$ 1,250,000	$ -		
- EB Johansen	0.3 mile	SF	87,700	$ 11.84	$ 1,038,116		
- WB Johansen	0.2 mile	SF	42,700	$ 11.84	$ 505,445		
- NB Steese	1.1 mile	SF	288,000	$ 11.84	$ 3,409,091		
- SB Steese	0.7 mile	SF	168,000	$ 11.84	$ 1,988,636		
17 Rural Section	# Lanes:	LANE MILE		$ 1,100,000	$ -		
18 Rehabilitation (3R)	# Lanes:	LANE MILE		$ 230,000	$ -		
19 Freeway Ramps - 2 Lane		SF		$ 9.47	$ -		
- NB Off	0.3 mile		44,400	$ 9.47	$ 420,455		
- NB On	0.3 mile		61,400	$ 9.47	$ 581,439		
- SB Off	0.2 mile		49,750	$ 9.47	$ 471,117		
- SB On	0.3 mile		60,000	$ 9.47	$ 568,182		
20 Freeway Ramps - 1 Lane		MILE		$ 1,300,000	$ -		
21 Frontage Roads - 2 Lane		MILE	-	$ 1,800,000	$ -		
22 Bridge	LxW: 138.5' x 86'	SF	11,911	$ 250	$ 2,977,750		
23 Retaining Walls		SF	20,000	$ 80	$ 1,600,000		
24 Noise Walls		SF			$ 1,200,000		
25 Additional Drainage System		MILE	3.4	$ 225,000	$ 775,568		
26 Landscaping		MILE	3.4	$ 350,000	$ 1,206,439		
27 Traffic Signal New		EA	2	$ 500,000	$ 1,000,000		
28 Traffic Signal Modification		EA		$ 100,000	$ -		
29 ITS		MILE	-	$ 550,000	$ -		
30 Additional Striping/Signage/Channelization		MILE	3.4	$ 115,000	$ 396,402		
31 Additional Illumination System		MILE	3.4	$ 750,000	$ 2,585,227		
32 Construction Traffic Control		%	10%	of Lines 14-30	$ 2,286,565		
33 Miscellaneous Items		%	10%	of Lines 14-31	$ 2,515,222		
34 Construction Subtotal (Lines 14 - 32)				(Round to nearest 1000)		$ 27,667,000	
35 Mobilization			6%	of Line 33		$ 1,660,020	
36 Others/Contingency			20%	of Line 33		$ 5,533,400	
37 Subtotal	(Lines 33 to 35)						**$ 34,900,000**
38							
39 **Construction Management Total** (Construction Admin., Inspection, etc.)			15%				**$ 5,235,000**
40 **Construction Total**	(Lines 36 and 38)						**$ 40,100,000**
V. Overall Total Cost for all Phases							**$ 50,500,000**

Project Specific Assumptions:

The above Order-of-Magnitude Estimate is in 2018 dollars based on conceptual design. Final costs of the project will depend on labor and