Bell Jetranger

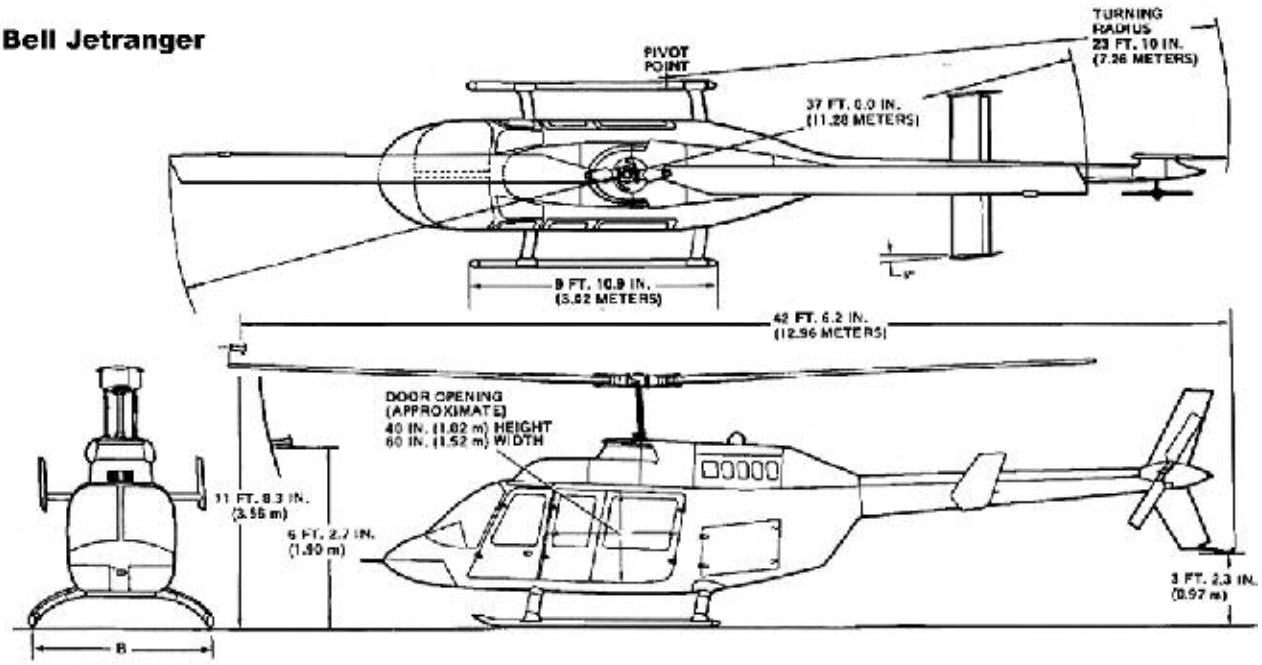

MAXIMUM TAKEOFF WEIGHT 4,450LBS

Boeing CH-47SD (Chinook)

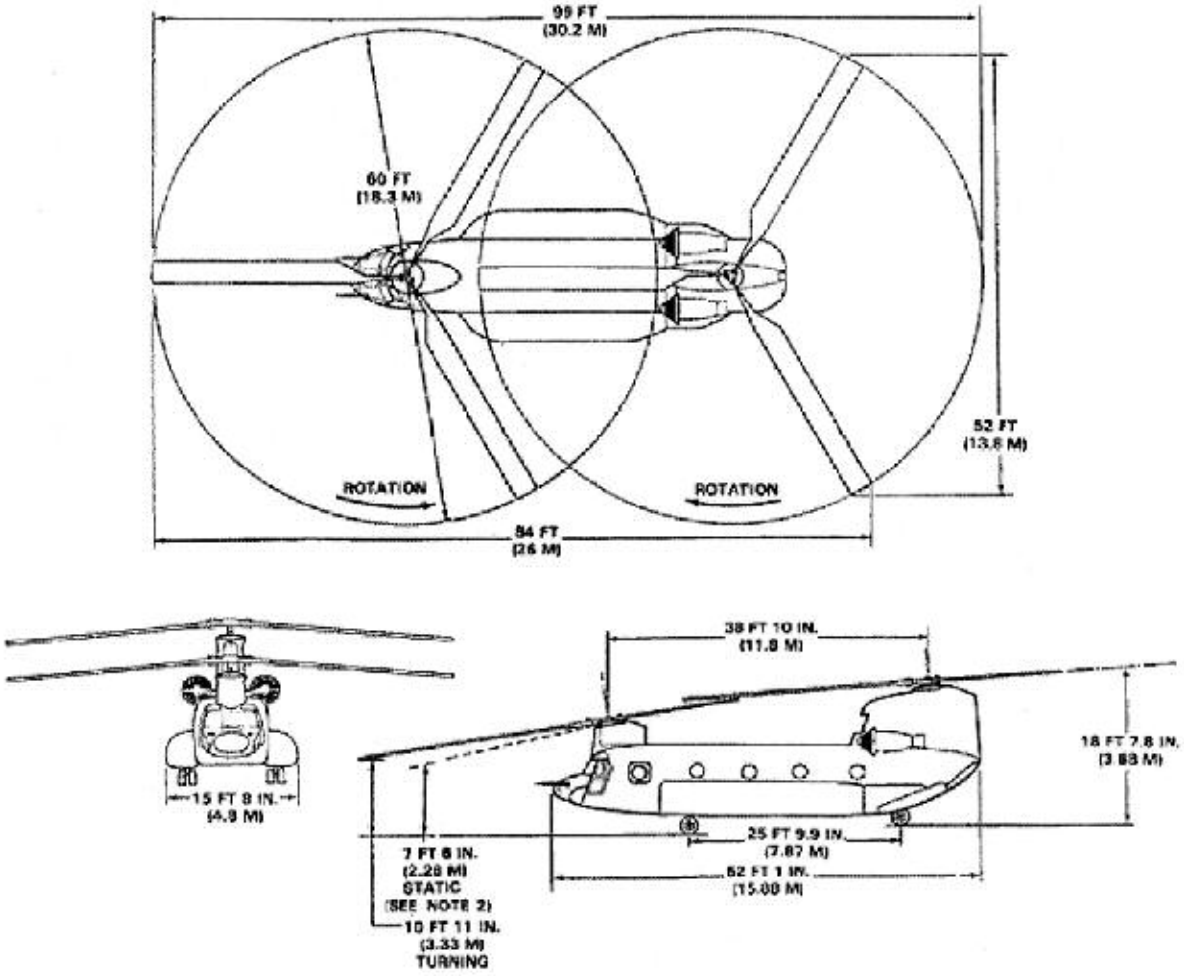

MAXIMUM TAKEOFF WEIGHT 48,500LBS

DEN/M/167651.A1.HT.NB/Helicopters.sl

PRELIMINARY
NOT FOR CONSTRUCTION

DSGN: R. MARTIN
DRAWN: D. VLCEK
CHK: –
APVD: –

NO. | DATE | REVISION | BY | APVD

VERIFY SCALE
BAR IS ONE INCH ON ORIGINAL DRAWING.
0 1"
IF NOT ONE INCH THIS SHEET, ADJUST SCALES ACCORDINGLY.

CH2MHILL
301 W. Northern Lights Boulevard
Suite 601
Anchorage, AK 99503
PHONE: 907-278-2551

TALKEETNA AIRPORT IMPROVEMENT
PHASE II
HELIPORT RELOCATION STUDY
ALASKA DOT & PF

EXHIBIT 4–1
HELICOPTER 3–VIEW

SHEET: OF
DWG:
DATE: MAR 2004
PROJ: 167651

FILENAME: 7651ex04-1.dwg PLOT DATE: 24-Mar-2004 PLOT TIME: 11:11:27

REUSE OF DOCUMENTS: THIS DOCUMENT, AND THE IDEAS AND DESIGNS INCORPORATED HEREIN, AS AN INSTRUMENT OF PROFESSIONAL SERVICE, IS THE PROPERTY OF CH2M HILL AND IS NOT TO BE USED, IN WHOLE OR IN PART, FOR ANY OTHER PROJECT WITHOUT THE WRITTEN AUTHORIZATION OF CH2MHILL. ©CH2M HILL