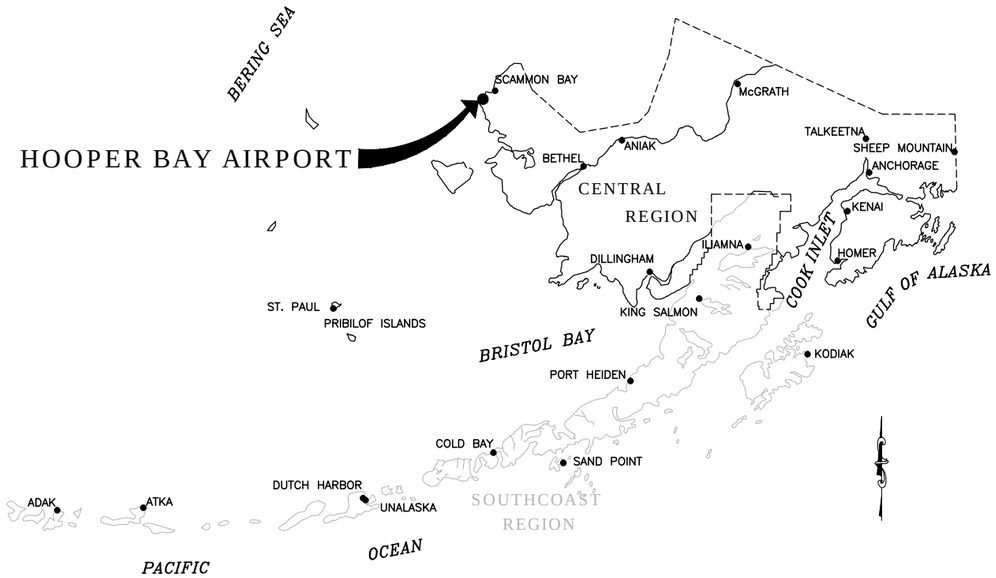

ALASKA CENTRAL REGION
LOCATION MAP

NOT TO SCALE

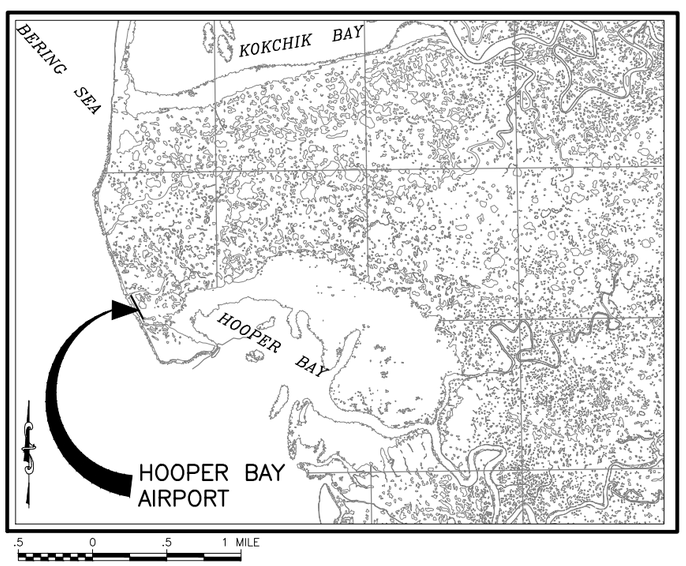

VICINITY MAP

SCALE 1"= 1/2 MILE
T 17 N, R 93 W
SEWARD MERIDIAN
U.S.G.S. HOOPER BAY C-4

CONSTRUCTION PLANS

HOOPER BAY AIRPORT

HOOPER BAY, ALASKA
AIRPORT IMPROVEMENTS
PROJECT No. 57419
AIRPORT IMPROVEMENT PROGRAM
No. 3-02-0126-006-2014
2014

PRE PS&E

JANUARY 2015

CONCUR	DATE
JOEL ST. AUBIN, P.E.	DIRECTOR OF DESIGN AND CONSTRUCTION
APPROVED	DATE
KENNETH M. MORTON, P.E.	REGIONAL PRECONSTRUCTION ENGINEER
APPROVED	DATE
WOLFGANG E. JUNGE, P.E.	AVIATION DESIGN SECTION CHIEF
APPROVED	DATE
LUKE BOWLAND, P.E.	PROJECT MANAGER

BY	DATE	REVISION

STATE OF ALASKA
DEPARTMENT OF TRANSPORTATION
AND PUBLIC FACILITIES
CENTRAL REGION

HOOPER BAY AIRPORT
HOOPER BAY, ALASKA
AIRPORT IMPROVEMENTS
PROJECT No. 57419
AIP No. 3-02-0126-006-2014
TITLE, SIGNATURES, LOCATION MAP, & VICINITY MAP

DATE: 1/30/2015
SHEET: 1 OF 28
AS-BUILT SHEET:

Designed By:	BT
Drawn By:	RJB
Checked By:	MHH

Date Revised: 1/30/2015, 8:21 AM
Layout Name: TITLE SIGNATURES LOCATION MAP & VICINITY MAP
File Path and Name: W:\Projects\Hooper Bay\Hooper Bay Airport Improvements 57419\Final Drawings\HPB 57419-Cover.dwg

INDEX

SHEET TITLE	SHEET No.
TITLE, SIGNATURES, LOCATION MAP, & VICINITY MAP	1
INDEX	2
ESTIMATED QUANTITIES	3
PROJECT LAYOUT PLAN	4
DEMOLITION PLAN	5
DEMOLITION PLAN	6
RUNWAY PLAN & PROFILE	7
RUNWAY PLAN & PROFILE	8
TAXIWAY PLAN & PROFILE	9
ACCESS ROAD PLAN & PROFILE STA 0+00.00 TO 10+00.00	10
ACCESS ROAD PLAN & PROFILE STA 10+00.00 TO 20+00.00	11
ACCESS ROAD PLAN & PROFILE STA 20+00.00 TO 30+00.00	12
ACCESS ROAD PLAN & PROFILE STA 30+00.00 TO 40+00.00	13
ACCESS ROAD PLAN & PROFILE STA 40+00.00 TO 53+99.15	14
ACCESS ROAD EXTENSION PLAN & PROFILE	15
TYPICAL SECTIONS	16
TYPICAL SECTIONS	17
TYPICAL SECTIONS	18
TYPICAL SECTIONS	19
APRON LAYOUT & GRADING PLAN	20
TAXIWAY & DITCH LAYOUT & GRADING PLAN	21
INTERSECTION AREA LAYOUT & GRADING PLAN	22
APPROACHES LAYOUT & GRADING PLAN	23
WIND CONE & SEGMENTED CIRCLE GRADING PLAN	24
SEGMENTED CIRCLE DETAILS	25
SIGNING PLAN	26
TIE-DOWN LAYOUT & DETAILS	27
BOLLARD LAYOUT & DETAILS	28
ELECTRICAL PLANS & DETAILS	E1 – E10

LEGEND

DESCRIPTION	EXISTING	PROPOSED
AIRCRAFT TIE-DOWNS		
BUILDINGS		
AIRPORT PROPERTY BOUNDARY LINE		
CULVERT W/ END SECTIONS		
DETAIL CALLOUT	DETAIL NUMBER / SHEET LOCATION	X / XX
DITCH		
EDGE OF PAVEMENT / SHOULDER		
EDGE WATERWAY		
ELECTRICAL TRANSFORMER		
FENCE LINE		x — x
GEOTEXTILE STABILIZATION		
GRADE BREAK		GB
JUNCTION BOX		
MIRL/MITL		
RUNWAY / TAXIWAY CENTERLINE		
RUNWAY SAFETY AREA		
REIL		
ROTATING BEACON		
SHOULDER EDGE		
SIGN		
SLOPE / FLOW ARROW		
STRUCTURAL EDGE		
SWALE-DITCH LINEAR GRADING		
TOE OF SLOPE		
CUT		
FILL		
TRANSITION EDGE		
WIND CONE		
SEGMENTED CONE & WIND CONE		

ABBREVIATIONS

ANICS	ALASKAN NAS INTERFACILITY COMMUNICATIONS	LS	LUMP SUM
ATCT	AIR TRAFFIC CONTROL TOWER	LT	LEFT
AWOS	AUTOMATED WEATHER OBSERVING SYSTEM	MAINT	MAINTENCE
BOP	BEGINNING OF PROJECT	MIRL	MEDIUM INTENSITY RUNWAY LIGHTING
BVCS	BEGIN VERTICAL CURVE STATION	MITL	MEDIUM INTENSITY TAXIWAY LIGHTING
BVCE	BEGIN VERTICAL CURVE ELEVATION	NTS	NOT TO SCALE
CASC	CRUSHED AGGREGATE SURFACE COURSE	NIC	NOT IN CONTRACT
℄	CENTERLINE	ODALS	OMNIDIRECTIONAL APPROACH LIGHTING SYSTEM
CS	CONTINGENT SUM	OFA	OBJECT FREE AREA
CY	CUBIC YARD	OG	ORIGINAL GROUND
DIA	DIAMETER	PAPI	PRECISION APPROACH PATH INDICATOR
DOT	DEPARTMENT OF TRANSPORTATION	PVI	POINT OF VERTICAL INTERSECTION
EEB	ELECTRICAL ENCLOSURE BUILDING	RAP	RECYCLED ASPHALT PAVEMENT
ELEV	ELEVATION	RD	ROAD
EOP	END OF PROJECT	RSA	RUNWAY SAFETY AREA
ESCP	EROSION AND SEDIMENT CONTROL PLAN	RT	RIGHT
EVCS	END VERTICAL CURVE STATION	RW	RUNWAY
EVCE	END VERTICAL CURVE ELEVATION	SF	SQUARE FEET
GB	GRADE BREAK	SREB	SNOW REMOVAL EQUIPMENT BUILDING
HMA	HOT MIX ASPHALT	STA	STATION
LF	LINEAR FOOT	TW	TAXIWAY
		TYP	TYPICAL

STANDARD DRAWINGS

SHEET TITLE	SHEET No.
SIGN FRAMING AND POST SPACING	S-0.11
BRACING FOR SIGNS MOUNTED ON SINGLE POST	S-1.00
POST MOUNTED SIGN OFFSET AND HEIGHT	S-5.01
LIGHT SIGN STRUCTURE POST EMBEDMENT	S-30.03
SIGN POST BASE AND FOUNDATION	S-31.00

ANCILLARY DRAWINGS

SHEET TITLE	SHEET No.

REFERENCE DRAWINGS

SHEET TITLE	SHEET No.

APPENDIX DRAWINGS

SHEET TITLE	SHEET No.
APPENDIX B	
SURVEY CONTROL (NOT INCLUDED IN PRE-PS&E PACKAGE)	
APPENDIX D	
CONSTRUCTION SAFETY & PHASING PLAN	AD1 – AD6

SHEET TITLE	SHEET No.
APPENDIX L	
SREB PLANS & DETAILS	
ARCHITECTURAL	A1 – A5
STRUCTURAL	S1 – S5
MECHANICAL	M1 – M2
ELECTRICAL	E1 – E4

BY	DATE	REVISION

STATE OF ALASKA
DEPARTMENT OF TRANSPORTATION AND PUBLIC FACILITIES
CENTRAL REGION

HOOPER BAY AIRPORT
HOOPER BAY, ALASKA
AIRPORT IMPROVEMENTS
PROJECT No. 57419
AIP No. 3-02-0126-006-2014
INDEX

DATE: 2/5/2015
SHEET: 2 OF 28
AS-BUILT SHEET:

Designed By: BT
Drawn By: RJB
Checked By: MHH
Date Revised: 2/05/2015, 2:27 PM
Layout Name: INDEX
File Path and Name: W:\Projects\Hooper Bay\Hooper Bay Airport Improvements 57419\Final Drawings\HPB 57419-Cover.dwg

ESTIMATED QUANTITIES

No.	ITEM	UNIT	QUANTITY NTP-1	QUANTITY NTP-2
D-705c	POROUS BACKFILL NO. 2	CY	97	0
D-705d	FILTER FABRIC	SY	870	0
G-100a	MOBILIZATION AND DEMOBILIZATION	LS	ALL REQUIRED	ALL REQUIRED
G-115a	WORKERS MEALS AND LODGING, OR PER DIEM	LS	ALL REQUIRED	ALL REQUIRED
G-130a	FIELD OFFICE	LS	ALL REQUIRED	ALL REQUIRED
G-130b	FIELD LABORATORY	LS	ALL REQUIRED	N/A
G-130g	NUCLEAR TESTING EQUIPMENT STORAGE SHED	EA	1	1
G-130j	ENGINEERING COMMUNICATIONS	CS	ALL REQUIRED	ALL REQUIRED
G-131a	ENGINEERING TRANSPORTATION (TRUCK)	EA	3	3
G-131b	ENGINEERING TRANSPORTATION (ATV)	EA	1	1
G-135a	CONSTRUCTION SURVEYING BY THE CONTRACTOR	LS	ALL REQUIRED	ALL REQUIRED
G-135b	EXTRA THREE PERSON SURVEY PARTY	HR	36	24
G-150a	EQUIPMENT RENTAL, 75 HP DOZER	HR	60	40
G-300a	CPM SCHEDULING	LS	ALL REQUIRED	ALL REQUIRED
G-700a	AIRPORT FLAGGER	CS	ALL REQUIRED	N/A
G-705a	WATERING FOR DUST CONTROL	M-GAL	560	0
G-710a	HIGHWAY TRAFFIC MAINTENANCE	LS	N/A	ALL REQUIRED
G-710b	HIGHWAY FLAGGER	CS	N/A	ALL REQUIRED
G-710d	HIGHWAY TRAFFIC CONTROL	CS	N/A	ALL REQUIRED
L-100b	REGULATOR, L-828	EA	1	0
L-100d	MEDIUM INTENSITY RUNWAY EDGE AND THRESHOLD LIGHT, L-861 AND L-861E	EA	48	0
L-100e	TAXIWAY EDGE LIGHT, L-861T	EA	29	0
L-100h	REMOVE RUNWAY AND TAXIWAY LIGHT	EA	59	0
L-100p	HANDHOLE, L-867, SIZE B	EA	7	0
L-100ap	SPARE PARTS	LS	ALL REQUIRED	N/A
L-101b	ROTATING BEACON, MEDIUM INTENSITY, L-801A	EA	0	1
L-107a	8-FOOT LIGHTED WIND CONE, IN PLACE	EA	1	0
L-107c	8-FOOT UNLIGHTED WIND CONE, IN PLACE	EA	1	0

No.	ITEM	UNIT	QUANTITY NTP-1	QUANTITY NTP-2
L-108b	UNDERGROUND CABLE #8 AWG, COPPER, 5KV FAA TYPE "C", L-824	LS	ALL REQUIRED	N/A
L-108d	#6 BARE COPPER GROUND CONDUCTOR	LS	ALL REQUIRED	N/A
L-108f	UNDERGROUND CABLE #8 AWG, COPPER, 600V, TYPE "C", L-824	LS	ALL REQUIRED	N/A
L-108g	GROUND ROD	EA	13	0
L-109c	ELECTRICAL ENCLOSURE AND FOUNDATION IN PLACE	EA	1	0
L-109d	INSTALLATION OF ELECTRICAL EQUIPMENT IN NEW OR EXISTING STRUCTURE	EA	1	0
L-110b	2-INCH RIGID STEEL CONDUIT	LS	ALL REQUIRED	N/A
L-110h	2-INCH PE CONDUIT	LS	ALL REQUIRED	N/A
L-132d	APPROACH LIGHTING AIDS MODIFICATIONS	LS	ALL REQUIRED	N/A
P-151c	CLEARING AND GRUBBING	ACRE	9	0
P-152a(1)	COMMON EXCAVATION	CY	21,700	0
P-152c	MUCK EXCAVATION	CY	20,800	0
P-152h(2)	BORROW MEASURED IN FINAL POSITION	CY	84,000	7,650
P-157a	EROSION, SEDIMENT, AND POLLUTION CONTROL ADMINISTRATION	LS	ALL REQUIRED	ALL REQUIRED
P-157b	TEMPORARY EROSION, SEDIMENT, AND POLLUTION CONTROL	CS	ALL REQUIRED	ALL REQUIRED
P-157f	WITHHOLDING	CS	ALL REQUIRED	ALL REQUIRED
P-157g	SWPPP MANAGER	LS	ALL REQUIRED	ALL REQUIRED
P-161a	RECYCLED ASPHALT PAVEMENT	SY	51,000	0
P-165a(1)	REMOVAL OF STRUCTURES (PERMITTED FACILITY)	LS	ALL REQUIRED	N/A
P-165a(2)	REMOVAL OF STRUCTURES (SEGMENTED CIRCLE AND WIND CONE)	LS	ALL REQUIRED	N/A
P-167a	DUST PALLIATIVE	LS	ALL REQUIRED	ALL REQUIRED
P-180b	RIPRAP, (CLASS II)	TON	4,300	17,600
P-185a	PRIMARY ARMOR STONE, CLASS PA-1200 LB	TON	4,250	0
P-208c	CRUSHED AGGREGATE SURFACE COURSE	TON	58,000	6,950
P-208g	CRUSHED AGGREGATE SURFACE COURSE STOCKPILE	TON	348	42
P-640b	SEGMENTED CIRCLE (PANEL-TYPE)	LS	ALL REQUIRED	N/A

No.	ITEM	UNIT	QUANTITY NTP-1	QUANTITY NTP-2
P-650a	AIRCRAFT TIE-DOWN	EA	32	0
P-660b	REFLECTIVE MARKER, TYPE II	EA	29	0
P-660c	CONE, 18 INCH	EA	78	0
P-661a	STANDARD SIGN	SF	5	26
P-670a	HAZARD MARKER BARRIER, PLASTIC	EA	41	0
P-671a	RUNWAY CLOSURE MARKER, VINYL MESH PANEL	EA	8	0
P-681a	GEOTEXTILE, SEPARATION	SY	35,000	59,000
P-682a	GEOTEXTILE, DRAINAGE	SY	14,300	0
S-142p	EQUIPMENT STORAGE BUILDING	LS	N/A	ALL REQUIRED
S-143a	HEATING FUEL TANK (1000 GALLONS)	EA	0	1
S-143b	FUEL (1800 GALLONS)	LS	N/A	ALL REQUIRED
S-143c	MANUAL DISPENSING SYSTEM	EA	0	1
S-143e	MOTOR VEHICLE FUEL-DISPENSING TANK (1000 GALLONS)	EA	0	1
S-143f	SPILL PREVENTION CONTROL AND COUNTERMEASURE PLAN	LS	N/A	ALL REQUIRED
T-901b	SEEDING	LB	328	25
T-908d	MULCH (GRAVEL)	TON	2,050	0
T-908x	TURF REINFORCEMENT MAT	SY	3,850	0

ESTIMATING FACTORS

No.	ITEM	FACTOR
P-180b	RIPRAP	1.46 T/CY
P-185a	PRIMARY ARMOR STONE	2.22 T/CY
P-208c	CRUSHED AGGREGATE SURFACE COURSE	1.99 T/CY

BY	DATE	REVISION

STATE OF ALASKA
DEPARTMENT OF TRANSPORTATION AND PUBLIC FACILITIES
CENTRAL REGION

HOOPER BAY AIRPORT
HOOPER BAY, ALASKA
AIRPORT IMPROVEMENTS
PROJECT No. 57419
AIP No. 3-02-0126-006-2014
ESTIMATED QUANTITIES

DATE: 2/5/2015
SHEET: 3 OF 28
AS-BUILT SHEET:

Designed By: BT
Drawn By: RJB
Checked By: MHH
Date Revised: 2/05/2015, 1:16 PM
Layout Name: ESTIMATED QUANTITIES
File Path and Name: W:\Projects\Hooper Bay\Hooper Bay Airport Improvements 57419\Final Drawings\HPB 57419-Cover.dwg

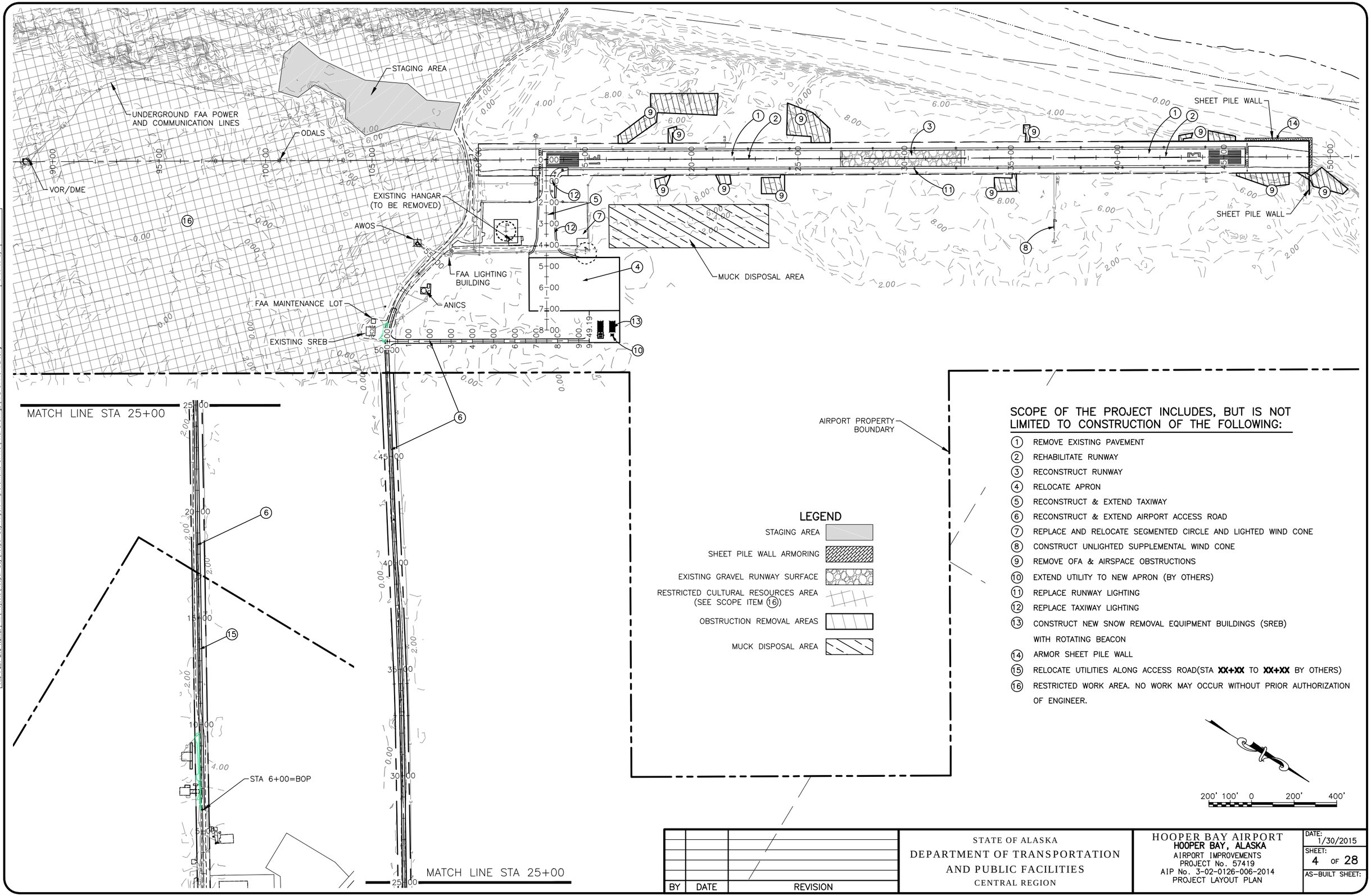

SCOPE OF THE PROJECT INCLUDES, BUT IS NOT LIMITED TO CONSTRUCTION OF THE FOLLOWING:

1. REMOVE EXISTING PAVEMENT
2. REHABILITATE RUNWAY
3. RECONSTRUCT RUNWAY
4. RELOCATE APRON
5. RECONSTRUCT & EXTEND TAXIWAY
6. RECONSTRUCT & EXTEND AIRPORT ACCESS ROAD
7. REPLACE AND RELOCATE SEGMENTED CIRCLE AND LIGHTED WIND CONE
8. CONSTRUCT UNLIGHTED SUPPLEMENTAL WIND CONE
9. REMOVE OFA & AIRSPACE OBSTRUCTIONS
10. EXTEND UTILITY TO NEW APRON (BY OTHERS)
11. REPLACE RUNWAY LIGHTING
12. REPLACE TAXIWAY LIGHTING
13. CONSTRUCT NEW SNOW REMOVAL EQUIPMENT BUILDINGS (SREB) WITH ROTATING BEACON
14. ARMOR SHEET PILE WALL
15. RELOCATE UTILITIES ALONG ACCESS ROAD(STA **XX+XX** TO **XX+XX** BY OTHERS)
16. RESTRICTED WORK AREA. NO WORK MAY OCCUR WITHOUT PRIOR AUTHORIZATION OF ENGINEER.

Date Revised:	1/30/2015, 8:21 AM	Designed By:	BT
Layout Name:	PROJECT LAYOUT PLAN	Drawn By:	RJB
File Path and Name:	W:\Projects\Hooper Bay\Hooper Bay Airport Improvements 57419\Final Drawings\HPB 57419-PLP.dwg	Checked By:	MHH

BY	DATE	REVISION

STATE OF ALASKA
DEPARTMENT OF TRANSPORTATION AND PUBLIC FACILITIES
CENTRAL REGION

HOOPER BAY AIRPORT
HOOPER BAY, ALASKA
AIRPORT IMPROVEMENTS
PROJECT No. 57419
AIP No. 3-02-0126-006-2014
PROJECT LAYOUT PLAN

DATE: 1/30/2015
SHEET: 4 OF 28
AS-BUILT SHEET:

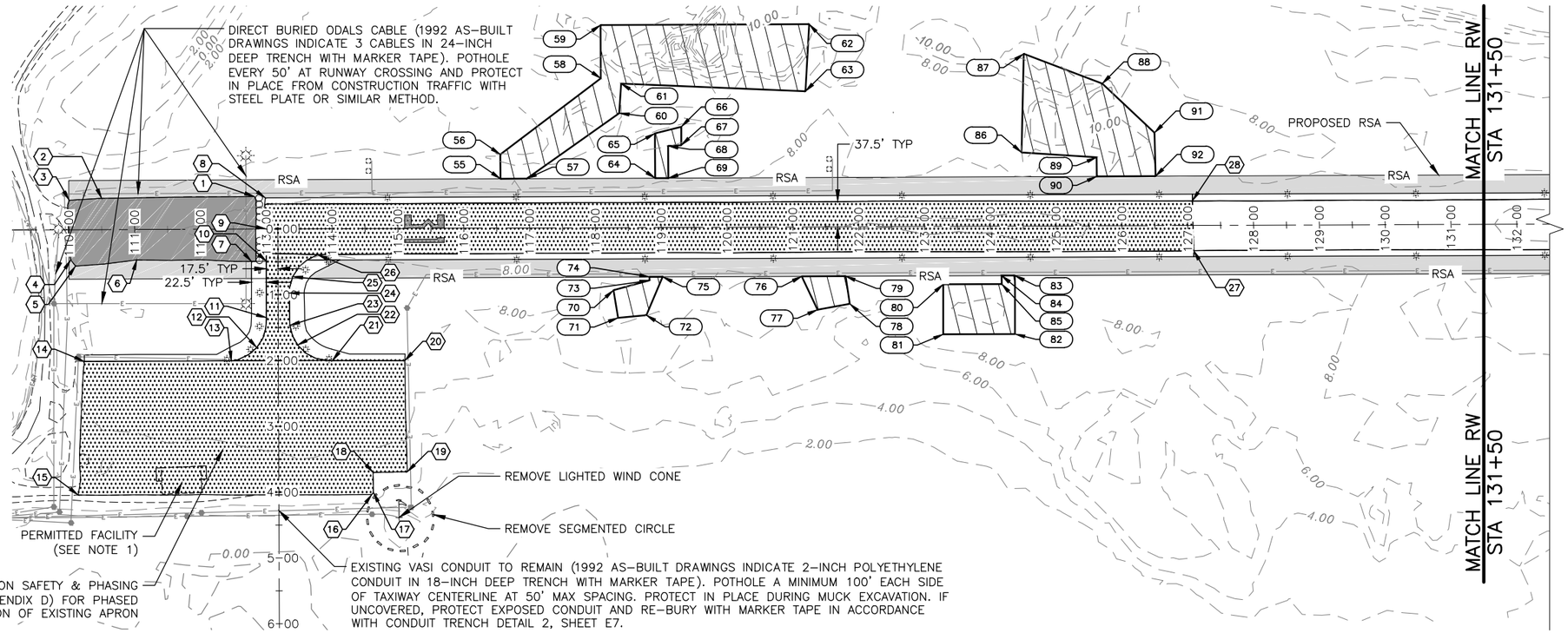

LEGEND

- REMOVE 2" ASPHALT AND 1" EMULSIFIED SAND
- REMOVE 6" EMULSIFIED SAND
- EXCAVATION FOR OBSTRUCTION REMOVAL
- CLEAR AND GRUBBING BETWEEN RUNWAY EDGE AND RSA EDGE

DEMO PLAN SCHEDULE

POINT	STATION	OFFSET	REMARKS
1	112+81.98	49.40L	PI
2	110+50.14	47.67L	PI
3	110+00.58	44.91L	PI
4	110+02.63	45.86R	PI
5	110+09.94	55.21R	PI
6	111+03.01	46.25R	PI
7	112+77.30	49.15R	PI
8	112+98.67	47.50L	PI

DEMO PLAN SCHEDULE

POINT	STATION	OFFSET	REMARKS
9	113+00.00	0.00R	PI
10	112+99.88	49.03R	PI
11	112+99.57	134.76R	PI
12	112+84.64	180.15R	PI
13	112+46.15	200.19R	PI
14	110+22.59	200.08R	PI
15	110+12.53	402.99R	PI
16	114+58.76	404.10R	PI

DEMO PLAN SCHEDULE

POINT	STATION	OFFSET	REMARKS
17	114+61.17	400.80R	PI
18	114+60.61	370.35R	PI
19	115+12.75	369.75R	PI
20	115+09.83	200.88R	PI
21	113+99.73	200.27R	PI
22	113+46.83	176.48R	PI
23	113+35.34	146.55R	PI
24	113+34.52	97.36R	PI

DEMO PLAN SCHEDULE

POINT	STATION	OFFSET	REMARKS
25	113+39.96	72.55R	PI
26	113+77.75	39.19R	PI
27	127+08.85	38.54R	PI
28	127+07.28	37.50L	PI

DEMOLITION NOTES:

1. HANGER AND CONNEX REMOVAL PER ITEM P-165.
2. REFER TO THE ELECTRICAL PLANS FOR ELECTRICAL DEMOLITION INFORMATION.
3. REMOVE ALL ASPHALT PAVEMENTS WITHIN LIMITS OF EXCAVATIONS BEFORE EXCAVATING SUBSTRUCTURE TO AVOID MIXING OR CONTAMINATION.

OBSTRUCTION REMOVAL

POINT	STATION	OFFSET	ELEVATION	REMARKS
55	116+56.05	75.00L	7.78	OBSTRUCTION
56	116+56.00	112.00L	8.04	OBSTRUCTION
57	116+96.00	75.00L	7.86	OBSTRUCTION
58	118+09.00	227.00L	9.59	OBSTRUCTION
59	118+09.00	308.00L	10.40	OBSTRUCTION
60	118+37.00	174.00L	9.06	OBSTRUCTION
61	118+40.00	219.00L	9.56	OBSTRUCTION
62	121+26.00	308.00L	10.96	OBSTRUCTION
63	121+20.00	206.00L	9.93	OBSTRUCTION
64	118+91.00	75.00L	8.69	OBSTRUCTION

OBSTRUCTION REMOVAL

POINT	STATION	OFFSET	ELEVATION	REMARKS
65	118+91.00	143.00L	8.82	OBSTRUCTION
66	119+31.00	153.00L	9.00	OBSTRUCTION
67	119+31.00	125.00L	8.70	OBSTRUCTION
68	119+11.00	124.00L	8.65	OBSTRUCTION
69	119+11.00	75.00L	8.73	OBSTRUCTION
70	118+27.00	95.00R	8.17	OBSTRUCTION
71	118+34.00	137.00R	8.65	OBSTRUCTION
72	118+77.00	133.00R	8.68	OBSTRUCTION
73	118+82.00	80.33R	8.22	OBSTRUCTION
74	118+82.00	75.00R	8.15	OBSTRUCTION

OBSTRUCTION REMOVAL

POINT	STATION	OFFSET	ELEVATION	REMARKS
75	119+02.00	75.00R	8.24	OBSTRUCTION
76	121+13.29	75.00R	8.63	OBSTRUCTION
77	121+37.00	126.00R	9.09	OBSTRUCTION
78	121+86.00	117.00R	9.08	OBSTRUCTION
79	121+79.78	75.00R	8.25	OBSTRUCTION
80	123+28.00	88.00R	8.97	OBSTRUCTION
81	123+28.00	164.00R	9.81	OBSTRUCTION
82	124+37.00	164.00R	9.81	OBSTRUCTION
83	124+37.00	75.00R	8.97	OBSTRUCTION
84	124+17.00	75.00R	8.97	OBSTRUCTION

OBSTRUCTION REMOVAL

POINT	STATION	OFFSET	ELEVATION	REMARKS
85	124+17.00	88.00R	8.97	OBSTRUCTION
86	124+48.00	112.00L	9.24	OBSTRUCTION
87	124+52.00	262.00L	10.74	OBSTRUCTION
88	125+71.00	216.00L	10.38	OBSTRUCTION
89	125+62.00	104.00L	9.15	OBSTRUCTION
90	125+62.28	75.00L	8.98	OBSTRUCTION
91	126+50.00	141.00L	9.56	OBSTRUCTION
92	126+51.52	75.00L	8.98	OBSTRUCTION

100' 50' 0 100' 200'

BY	DATE	REVISION

STATE OF ALASKA
DEPARTMENT OF TRANSPORTATION AND PUBLIC FACILITIES
CENTRAL REGION

HOOPER BAY AIRPORT
HOOPER BAY, ALASKA
AIRPORT IMPROVEMENTS
PROJECT No. 57419
AIP No. 3-02-0126-006-2014
DEMOLITION PLAN

DATE: 1/30/2015
SHEET: 5 OF 28
AS-BUILT SHEET:

Designed By:	BT
Drawn By:	R.B
Checked By:	MHH
Date Revised:	1/30/2015, 2:38 PM
Layout Name:	DEMOLITION PLAN 1
File Path and Name:	W:\Projects\Hooper Bay\Hooper Bay Airport Improvements 57419\Final Drawings\HPB 57419 - DEMOLITION.dwg

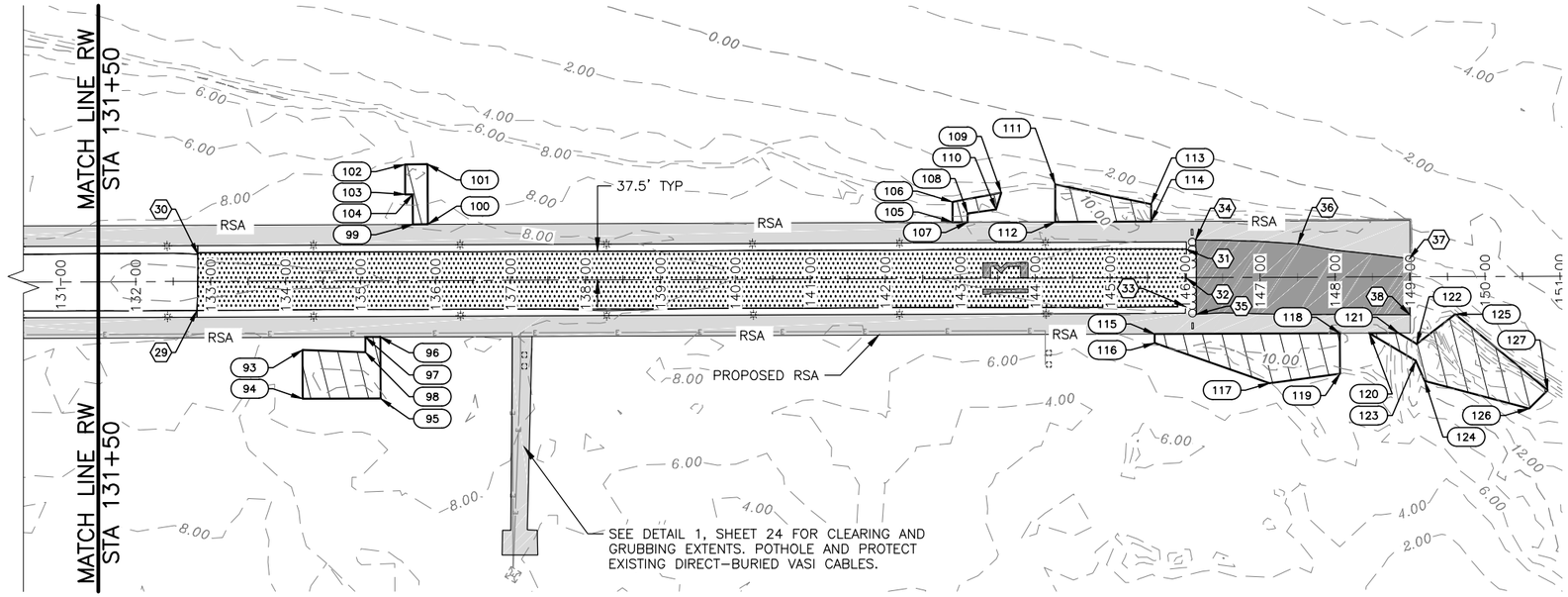

DEMO PLAN SCHEDULE

POINT	STATION	OFFSET	REMARKS
29	132+81.72	38.58R	PI
30	132+83.03	36.34L	PI
31	146+01.71	37.87L	PI
32	146+01.36	0.00R	PI
33	146+00.47	38.68R	PI
34	146+14.24	50.14L	PI
35	146+14.64	48.91R	PI
36	147+50.41	44.27L	PI
37	148+99.42	24.17L	PI
38	148+99.30	50.44R	PI

OBSTRUCTION REMOVAL

POINT	STATION	OFFSET	ELEVATION	REMARKS
93	134+22.00	92.00R	9.03	OBSTRUCTION
94	134+22.00	157.00R	9.74	OBSTRUCTION
95	135+26.00	157.00R	9.74	OBSTRUCTION
96	135+26.00	75.00R	9.07	OBSTRUCTION
97	135+06.00	75.00R	9.06	OBSTRUCTION
98	135+06.00	95.23R	9.06	OBSTRUCTION
99	135+70.00	75.00L	9.28	OBSTRUCTION
100	135+90.00	75.00L	9.28	OBSTRUCTION
101	135+90.00	155.00L	9.72	OBSTRUCTION
102	135+60.00	155.00L	9.72	OBSTRUCTION
103	135+60.00	115.00L	9.28	OBSTRUCTION
104	135+70.00	115.00L	9.28	OBSTRUCTION

OBSTRUCTION REMOVAL

POINT	STATION	OFFSET	ELEVATION	REMARKS
105	142+90.00	75.00L	8.95	OBSTRUCTION
106	142+90.00	102.00L	9.14	OBSTRUCTION
107	143+10.00	75.00L	8.98	OBSTRUCTION
108	143+10.00	86.76L	8.98	OBSTRUCTION
109	143+55.00	114.00L	9.28	OBSTRUCTION
110	143+48.00	92.00L	9.03	OBSTRUCTION
111	144+27.00	125.00L	9.40	OBSTRUCTION
112	144+27.00	75.00L	8.90	OBSTRUCTION
113	145+55.00	98.00L	9.10	OBSTRUCTION
114	145+55.00	75.00L	8.90	OBSTRUCTION
115	145+59.00	75.00R	8.99	OBSTRUCTION
116	145+59.00	87.00R	8.98	OBSTRUCTION

OBSTRUCTION REMOVAL

POINT	STATION	OFFSET	ELEVATION	REMARKS
117	147+12.00	141.00R	9.57	OBSTRUCTION
118	148+06.00	75.00R	8.80	OBSTRUCTION
119	148+06.00	129.00R	9.00	OBSTRUCTION
120	148+45.18	75.00R	8.50	OBSTRUCTION
121	148+84.27	75.00R	8.50	OBSTRUCTION
122	149+08.54	89.45R	13.96	OBSTRUCTION
123	149+06.98	111.79R	13.92	OBSTRUCTION
124	149+19.00	139.00R	14.27	OBSTRUCTION
125	149+60.00	50.00R	15.47	OBSTRUCTION
126	150+58.00	176.00R	18.36	OBSTRUCTION
127	150+83.00	152.00R	19.09	OBSTRUCTION

LEGEND

- REMOVE 2" ASPHALT AND 1" EMULSIFIED SAND
- REMOVE 6" EMULSIFIED SAND
- EXCAVATION FOR OBSTRUCTION REMOVAL
- CLEAR AND GRUBBING BETWEEN RUNWAY EDGE AND RSA EDGE

100' 50' 0 100' 200'

BY	DATE	REVISION

STATE OF ALASKA
DEPARTMENT OF TRANSPORTATION AND PUBLIC FACILITIES
CENTRAL REGION

HOOPER BAY AIRPORT
HOOPER BAY, ALASKA
AIRPORT IMPROVEMENTS
PROJECT No. 57419
AIP No. 3-02-0126-006-2014
DEMOLITION PLAN

DATE: 1/30/2015
SHEET: 6 OF 28
AS-BUILT SHEET:

Designed By:	BT
Drawn By:	RJB
Checked By:	MHH
Date Revised:	1/30/2015, 2:38 PM
Layout Name:	DEMOLITION PLAN 2
File Path and Name:	W:\Projects\Hooper Bay\Hooper Bay Airport Improvements 57419\Final Drawings\HPB 57419 - DEMOLITION.dwg

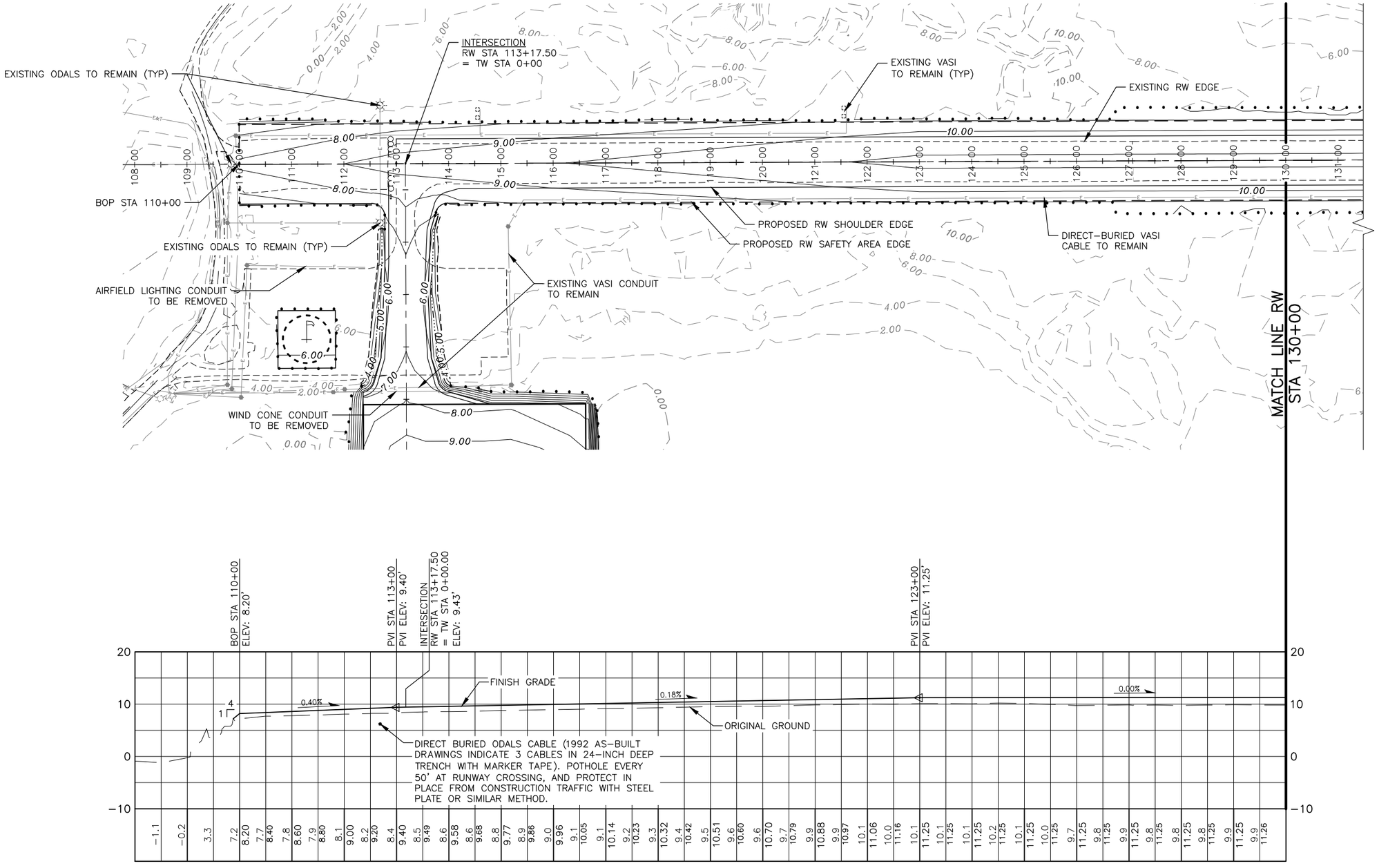

Date Revised:	1/30/2015, 8:22 AM	
Layout Name:	RUNWAY PLAN & PROFILE	
File Path and Name:	W:\Projects\Hooper Bay\Hooper Bay Airport Improvements 57419\Final Drawings\HPB 57419-DESIGN.dwg	
Designed By:	BT	
Drawn By:	RJB	
Checked By:	MHH	

BY	DATE	REVISION

STATE OF ALASKA
DEPARTMENT OF TRANSPORTATION
AND PUBLIC FACILITIES
CENTRAL REGION

HOOPER BAY AIRPORT
HOOPER BAY, ALASKA
AIRPORT IMPROVEMENTS
PROJECT No. 57419
AIP No. 3-02-0126-006-2014
RUNWAY PLAN & PROFILE

DATE: 1/30/2015
SHEET: 7 OF 28
AS-BUILT SHEET:

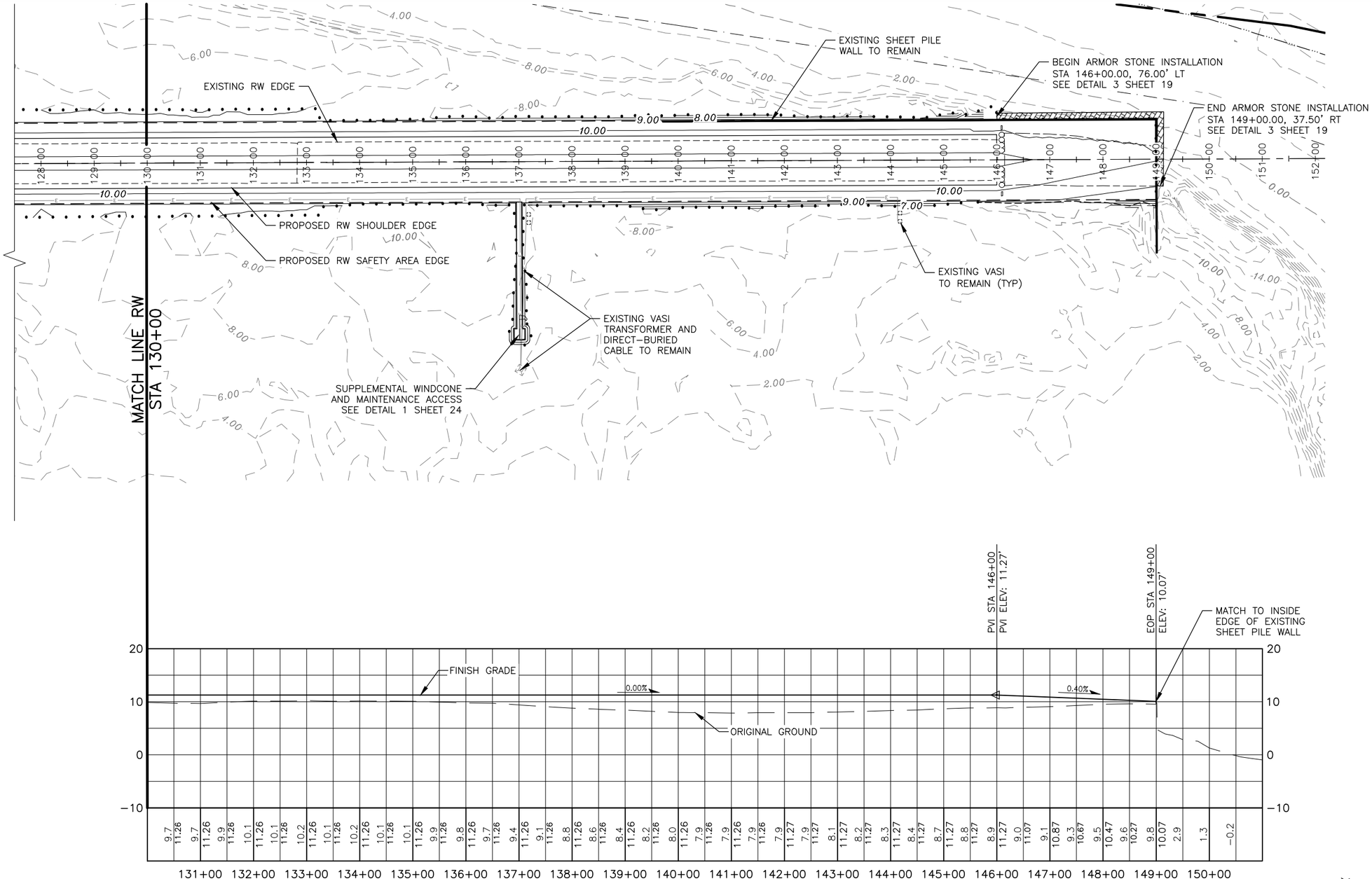

Date Revised:	1/30/2015, 8:22 AM
Layout Name:	RUNWAY P&P (NW END)
File Path and Name:	W:\Projects\Hooper Bay\Hooper Bay Airport Improvements 57419\Final Drawings\HPB 57419-DESIGN.dwg

Designed By:	BT
Drawn By:	RJB
Checked By:	MHH

BY	DATE	REVISION

STATE OF ALASKA
DEPARTMENT OF TRANSPORTATION AND PUBLIC FACILITIES
CENTRAL REGION

HOOPER BAY AIRPORT
HOOPER BAY, ALASKA
AIRPORT IMPROVEMENTS
PROJECT No. 57419
AIP No. 3-02-0126-006-2014
RUNWAY PLAN & PROFILE

DATE: 1/30/2015
SHEET: 8 OF 28
AS-BUILT SHEET:

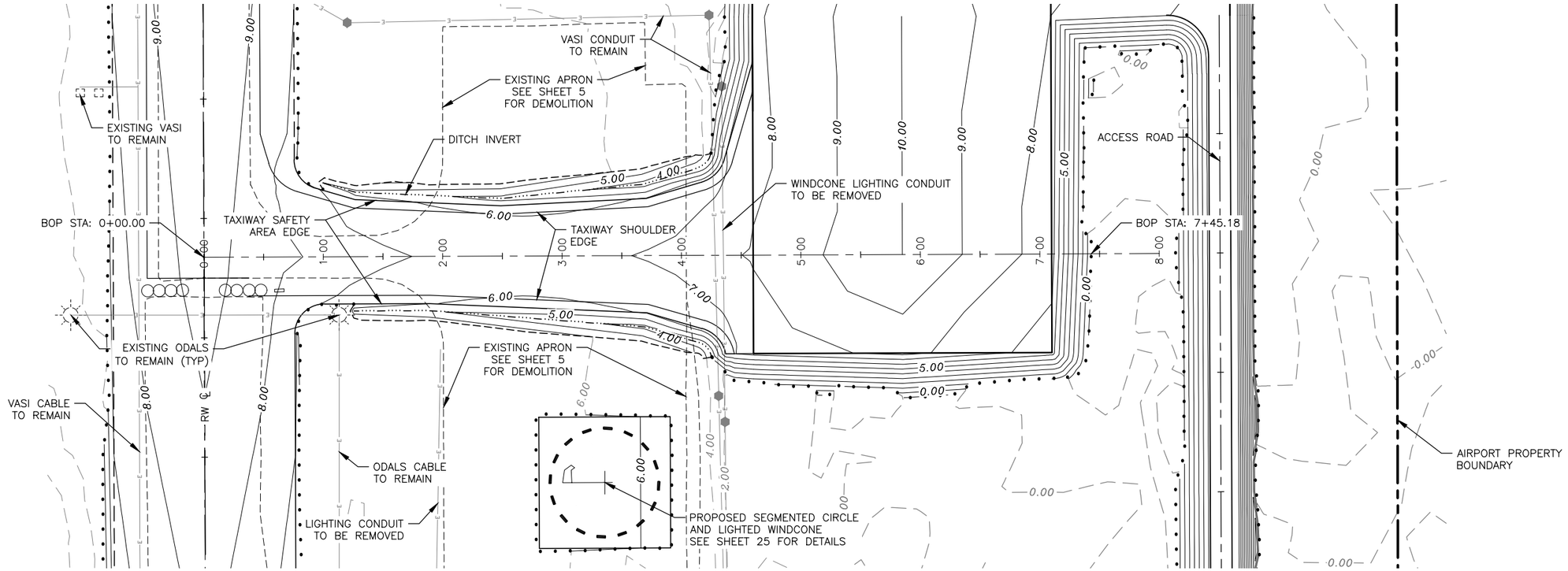

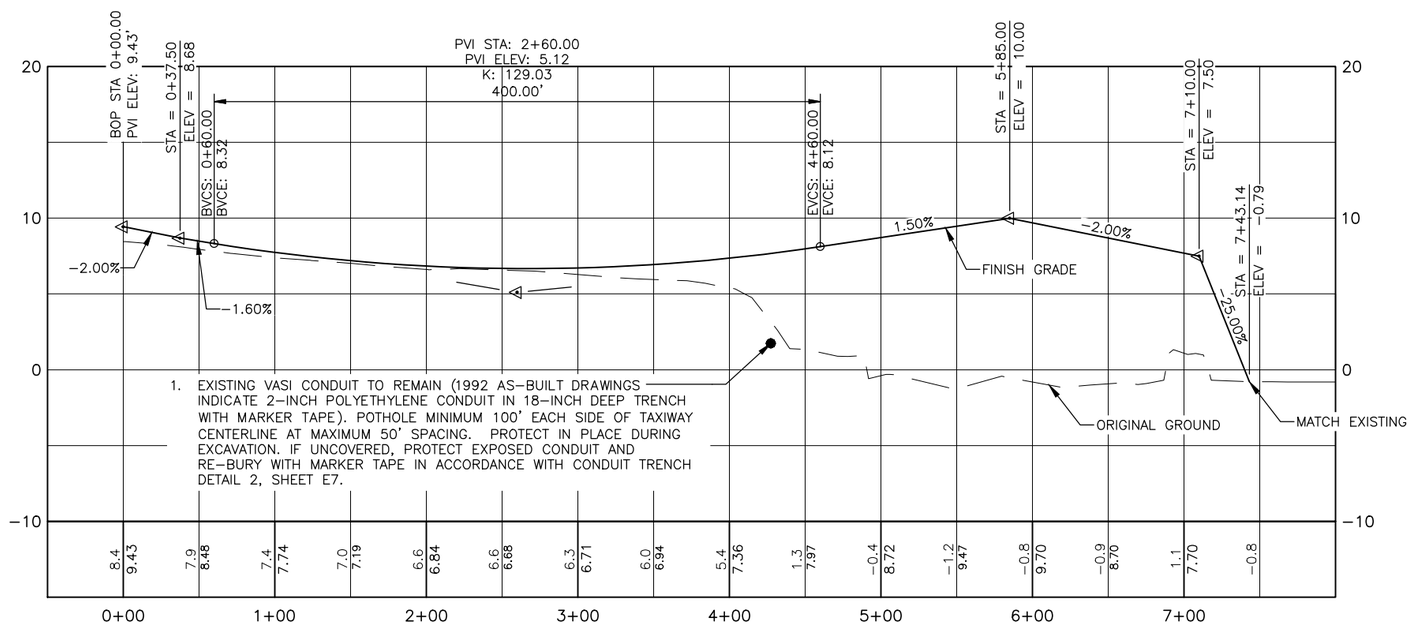

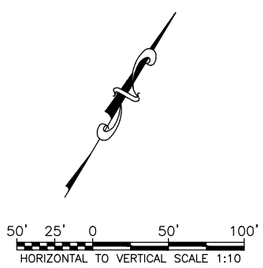

Date Revised:	1/30/2015, 8:22 AM
Layout Name:	TAXIWAY PLAN & PROFILE
File Path and Name:	W:\Projects\Hooper Bay\Hooper Bay Airport Improvements 57419\Final Drawings\HPB 57419-DESIGN.dwg

Designed By:	BT
Drawn By:	RJB
Checked By:	MHH

BY	DATE	REVISION

STATE OF ALASKA
DEPARTMENT OF TRANSPORTATION AND PUBLIC FACILITIES
CENTRAL REGION

HOOPER BAY AIRPORT
HOOPER BAY, ALASKA
AIRPORT IMPROVEMENTS
PROJECT No. 57419
AIP No. 3-02-0126-006-2014
TAXIWAY PLAN & PROFILE

DATE: 1/30/2015
SHEET: 9 OF 28
AS-BUILT SHEET:

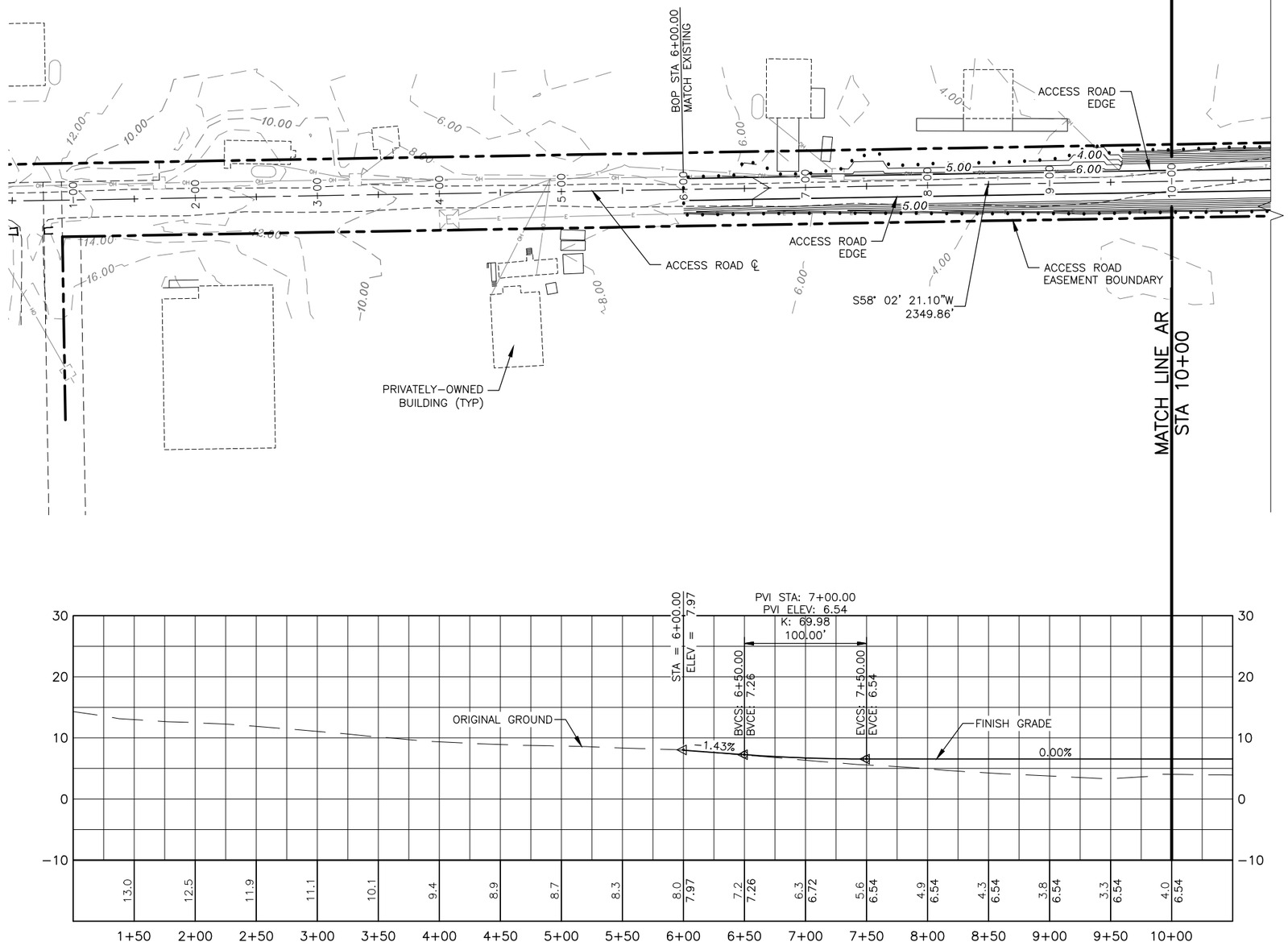

Date Revised:	2/03/2015, 1:51 PM
Layout Name:	ACCESS ROAD PLAN & PROFILE STA 0+00.00 TO 10+00.00
File Path and Name:	W:\Projects\Hooper Bay\Hooper Bay Airport Improvements 57419\Final Drawings\HPB 57419-DESIGN.dwg

Designed By:	BT
Drawn By:	RJB
Checked By:	MHH

BY	DATE	REVISION

STATE OF ALASKA
DEPARTMENT OF TRANSPORTATION
AND PUBLIC FACILITIES
CENTRAL REGION

HOOPER BAY AIRPORT
HOOPER BAY, ALASKA
AIRPORT IMPROVEMENTS
PROJECT No. 57419
AIP No. 3-02-0126-006-2014
ACCESS ROAD PLAN & PROFILE
STA 0+00.00 TO 10+00.00

DATE: 2/3/2015
SHEET: 10 OF 28
AS-BUILT SHEET:

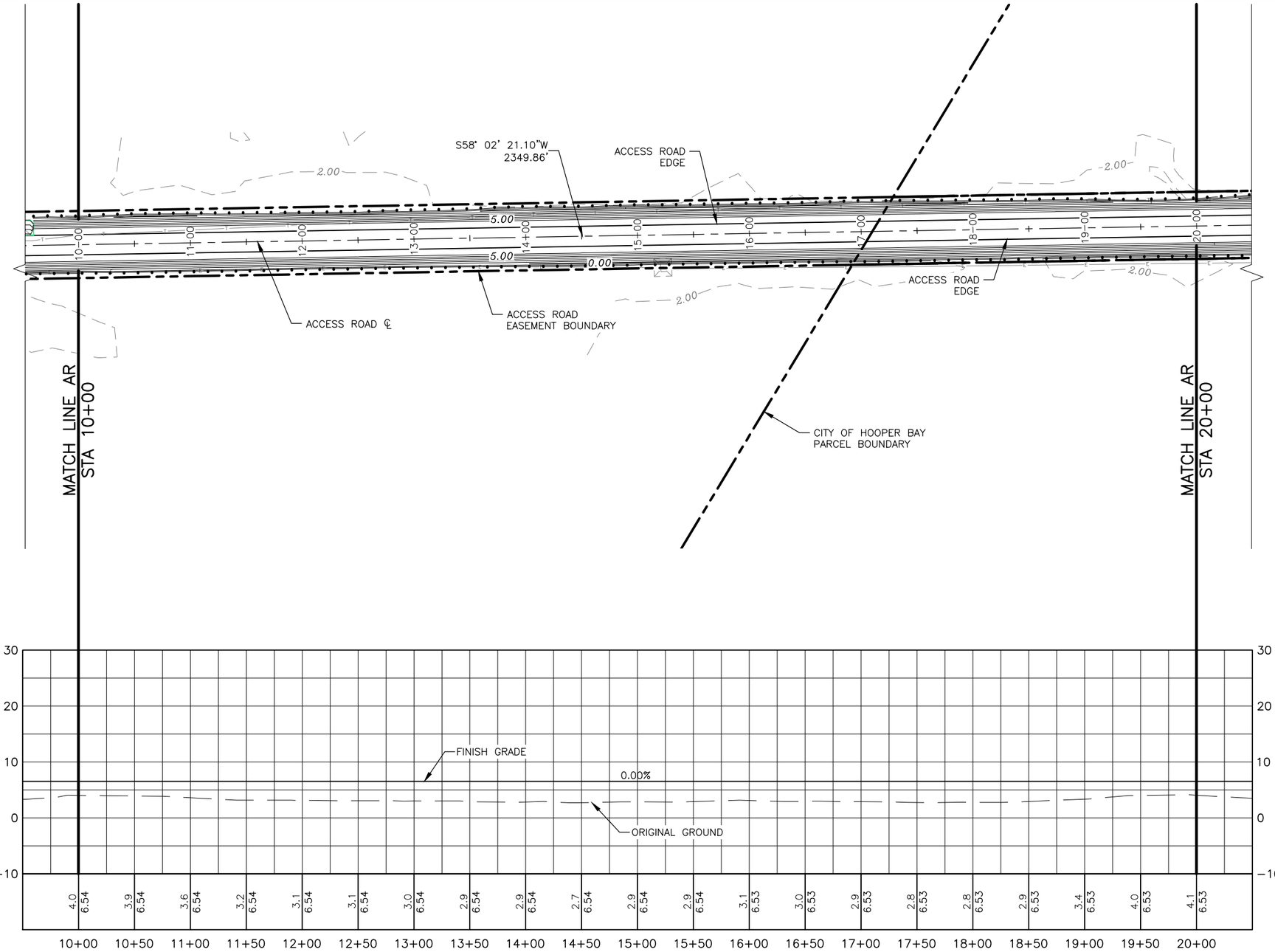

50' 25' 0 50' 100'
HORIZONTAL TO VERTICAL SCALE 1:10

Designed By:	BT
Drawn By:	RJB
Checked By:	MHH
Date Revised:	1/30/2015, 8:23 AM
Layout Name:	ACCESS ROAD PLAN & PROFILE STA 10+00.00 TO 20+00.00
File Path and Name:	W:\Projects\Hooper Bay\Hooper Bay Airport Improvements 57419\Final Drawings\HPB 57419-DESIGN.dwg

BY	DATE	REVISION

STATE OF ALASKA
DEPARTMENT OF TRANSPORTATION
AND PUBLIC FACILITIES
CENTRAL REGION

HOOPER BAY AIRPORT
HOOPER BAY, ALASKA
AIRPORT IMPROVEMENTS
PROJECT No. 57419
AIP No. 3-02-0126-006-2014
ACCESS ROAD PLAN & PROFILE
STA 10+00.00 TO 20+00.00

DATE: 1/30/2015
SHEET: 11 OF 28
AS-BUILT SHEET:

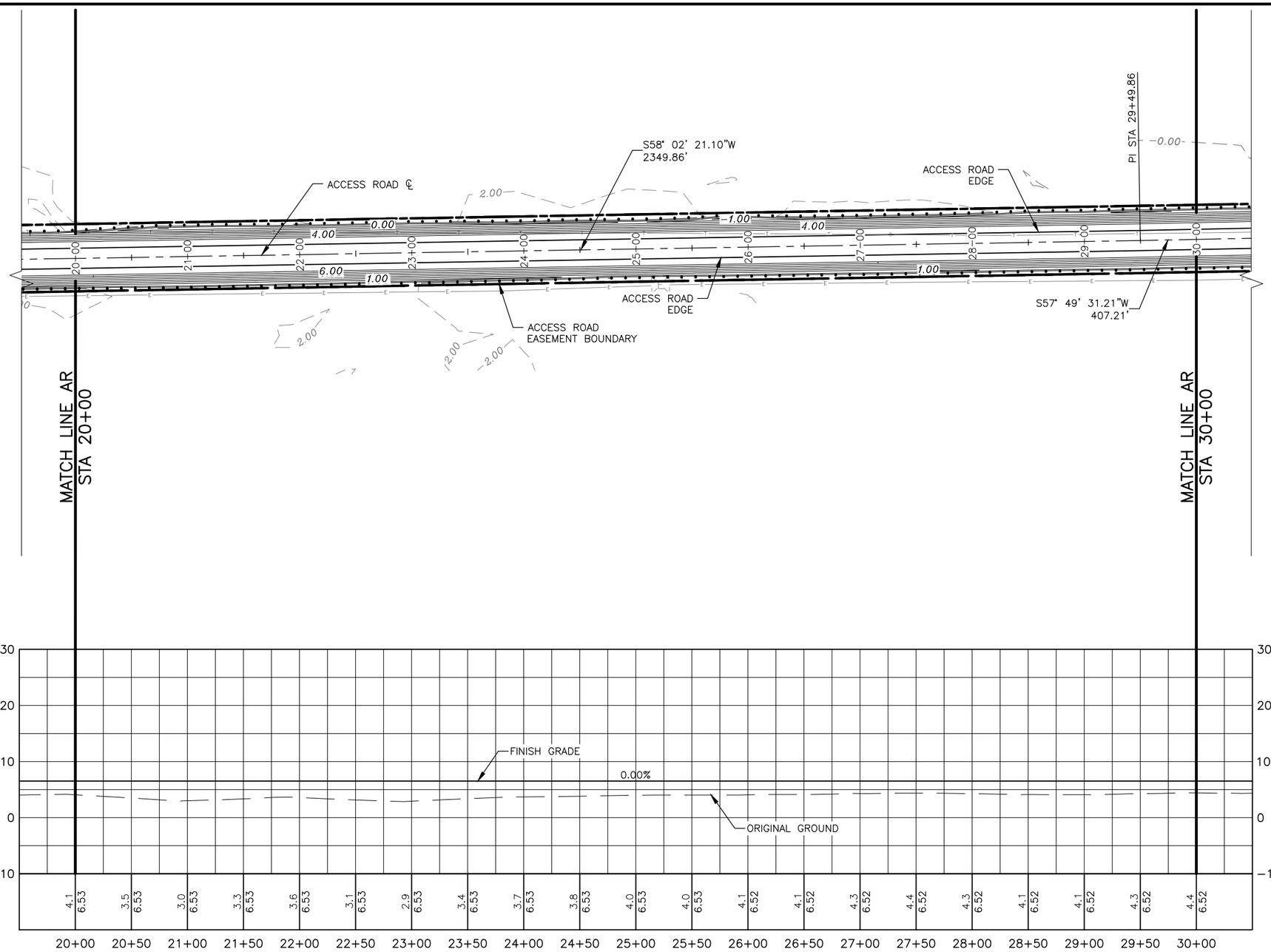

Designed By:	BT
Drawn By:	RJB
Checked By:	MHH
Date Revised:	1/30/2015, 8:23 AM
Layout Name:	ACCESS ROAD PLAN & PROFILE STA 20+00.00 TO 30+00.00
File Path and Name:	W:\Projects\Hooper Bay\Hooper Bay Airport Improvements 57419\Final Drawings\HPB 57419-DESIGN.dwg

BY	DATE	REVISION

STATE OF ALASKA
DEPARTMENT OF TRANSPORTATION
AND PUBLIC FACILITIES
CENTRAL REGION

HOOPER BAY AIRPORT
HOOPER BAY, ALASKA
AIRPORT IMPROVEMENTS
PROJECT No. 57419
AIP No. 3-02-0126-006-2014
ACCESS ROAD PLAN & PROFILE
STA 20+00.00 TO 30+00.00

DATE: 1/30/2015
SHEET: 12 OF 28
AS-BUILT SHEET:

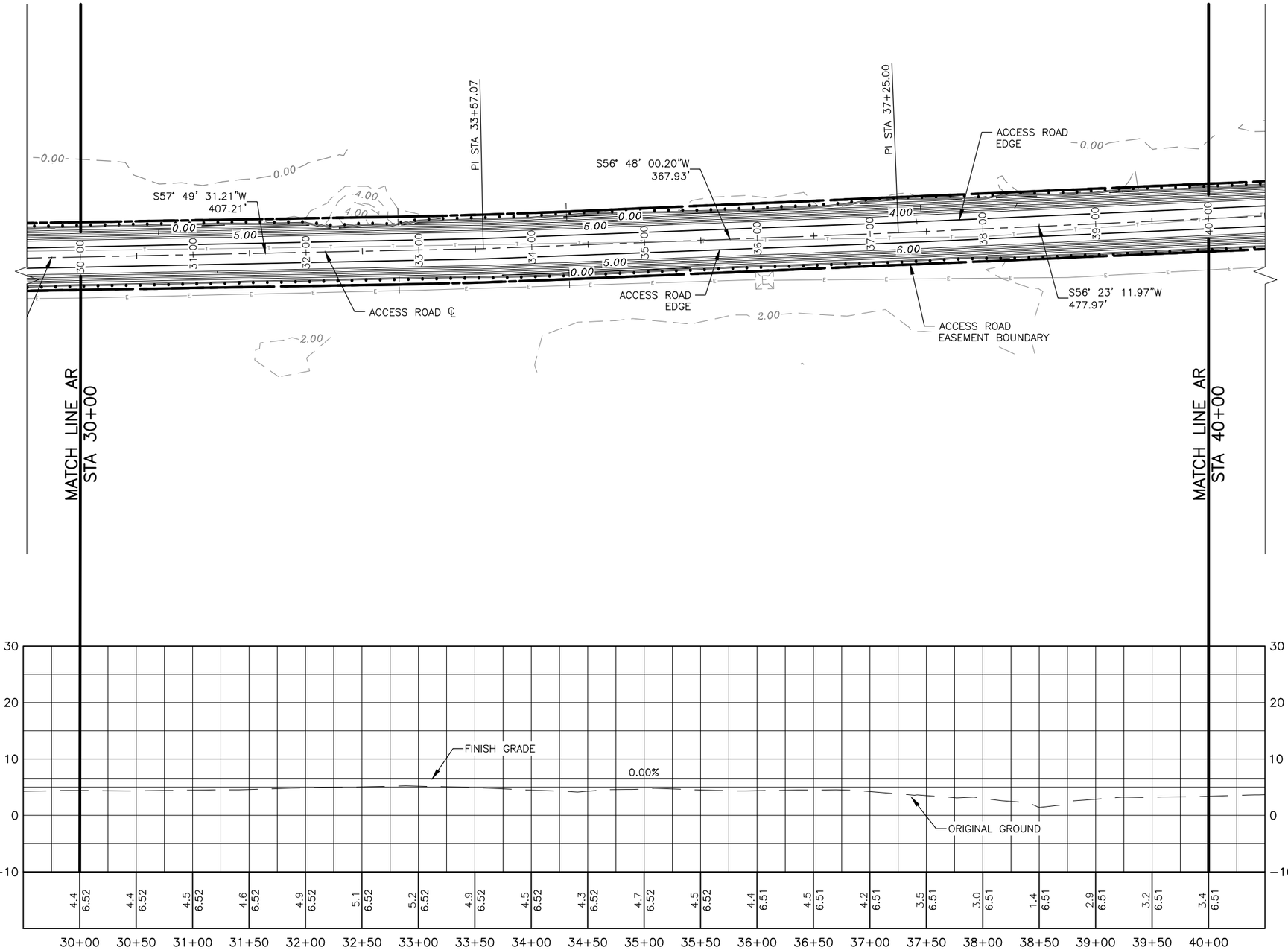

50' 25' 0 50' 100'
HORIZONTAL TO VERTICAL SCALE 1:10

Date Revised:	1/30/2015, 8:23 AM
Layout Name:	ACCESS ROAD PLAN & PROFILE STA 30+00.00 TO 40+00.00
File Path and Name:	W:\Projects\Hooper Bay\Hooper Bay Airport Improvements 57419\Final Drawings\HPB 57419-DESIGN.dwg

Designed By:	BT
Drawn By:	RJB
Checked By:	MHH

BY	DATE	REVISION

STATE OF ALASKA
DEPARTMENT OF TRANSPORTATION
AND PUBLIC FACILITIES
CENTRAL REGION

HOOPER BAY AIRPORT
HOOPER BAY, ALASKA
AIRPORT IMPROVEMENTS
PROJECT No. 57419
AIP No. 3-02-0126-006-2014
ACCESS ROAD PLAN & PROFILE
STA 30+00.00 TO 40+00.00

DATE: 1/30/2015
SHEET: 13 OF 28
AS-BUILT SHEET:

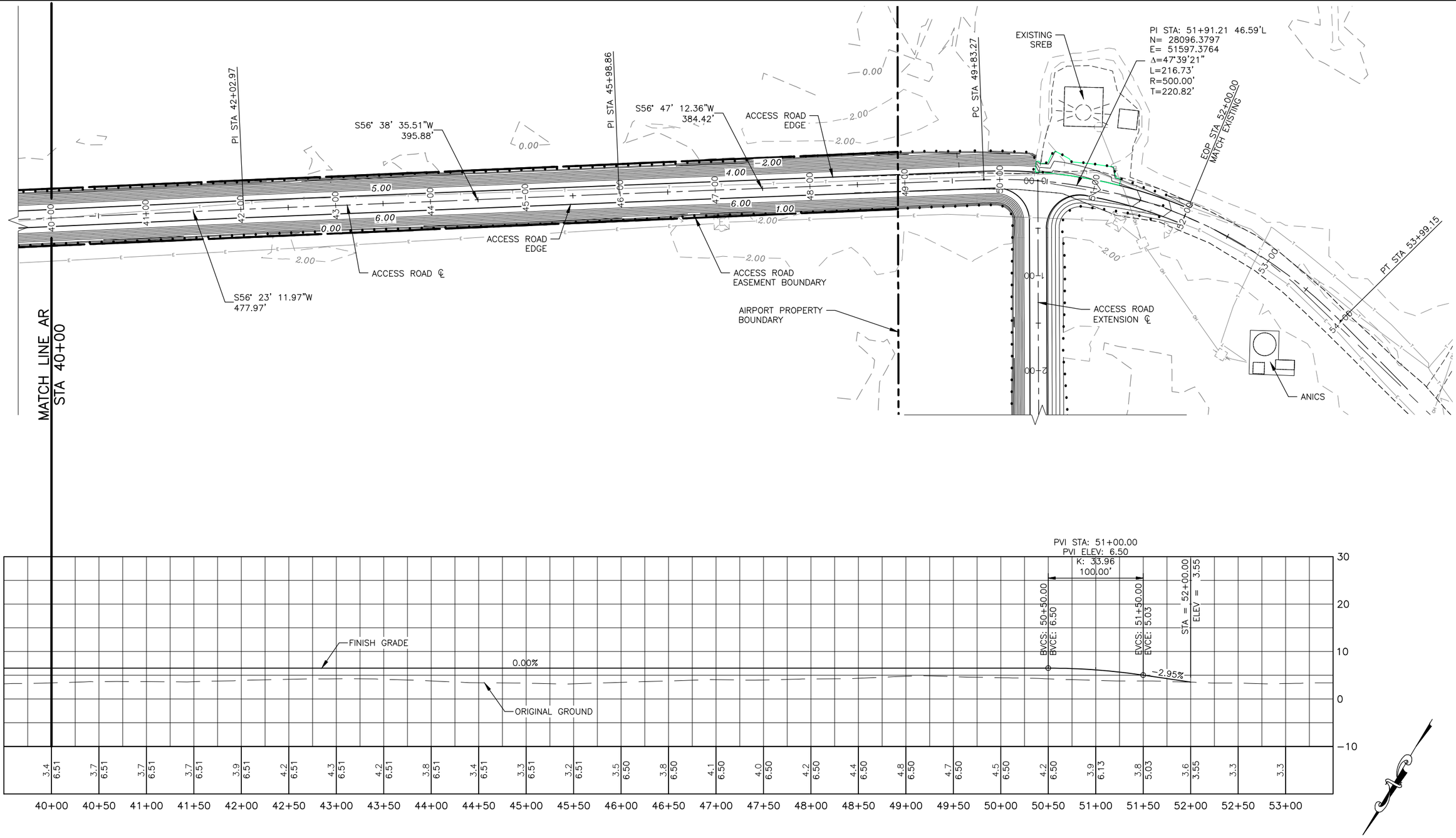

Date Revised:	1/30/2015, 8:23 AM
Layout Name:	ACCESS ROAD PLAN & PROFILE STA 40+00.00 TO 53+99.15
File Path and Name:	W:\Projects\Hooper Bay\Hooper Bay Airport Improvements 57419\Final Drawings\HPB 57419-DESIGN.dwg
Designed By:	BT
Drawn By:	RJB
Checked By:	MHH

BY	DATE	REVISION

STATE OF ALASKA
DEPARTMENT OF TRANSPORTATION
AND PUBLIC FACILITIES
CENTRAL REGION

HOOPER BAY AIRPORT
HOOPER BAY, ALASKA
AIRPORT IMPROVEMENTS
PROJECT No. 57419
AIP No. 3-02-0126-006-2014
ACCESS ROAD PLAN & PROFILE
STA 40+00.00 TO 53+99.15

DATE: 1/30/2015
SHEET: 14 OF 28
AS-BUILT SHEET:

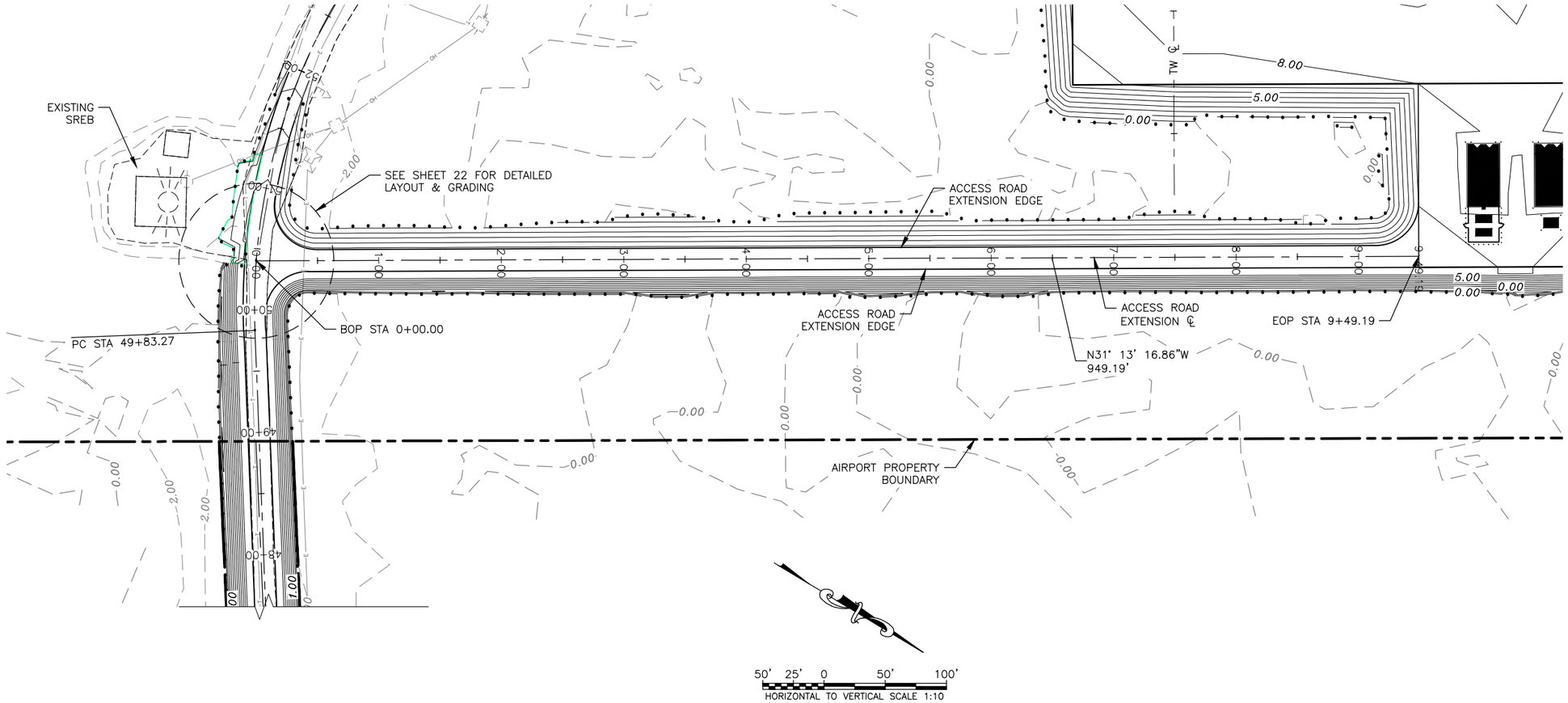

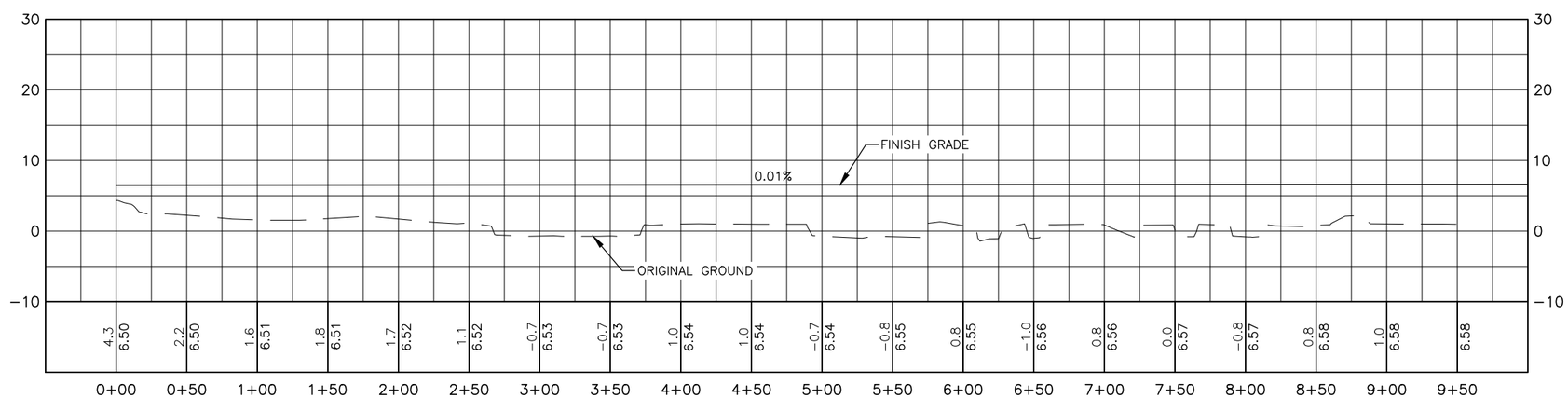

Date Revised:	1/30/2015, 8:23 AM
Layout Name:	ACCESS ROAD EXTENSION PLAN & PROFILE
File Path and Name:	W:\Projects\Hooper Bay\Hooper Bay Airport Improvements 57419\Final Drawings\HPB 57419-DESIGN.dwg

Designed By:	BT
Drawn By:	RJB
Checked By:	MHH

BY	DATE	REVISION

STATE OF ALASKA
DEPARTMENT OF TRANSPORTATION AND PUBLIC FACILITIES
CENTRAL REGION

HOOPER BAY AIRPORT
HOOPER BAY, ALASKA
AIRPORT IMPROVEMENTS
PROJECT No. 57419
AIP No. 3-02-0126-006-2014
ACCESS ROAD EXTENSION PLAN & PROFILE

DATE: 1/30/2015
SHEET: 15 OF 28
AS-BUILT SHEET:

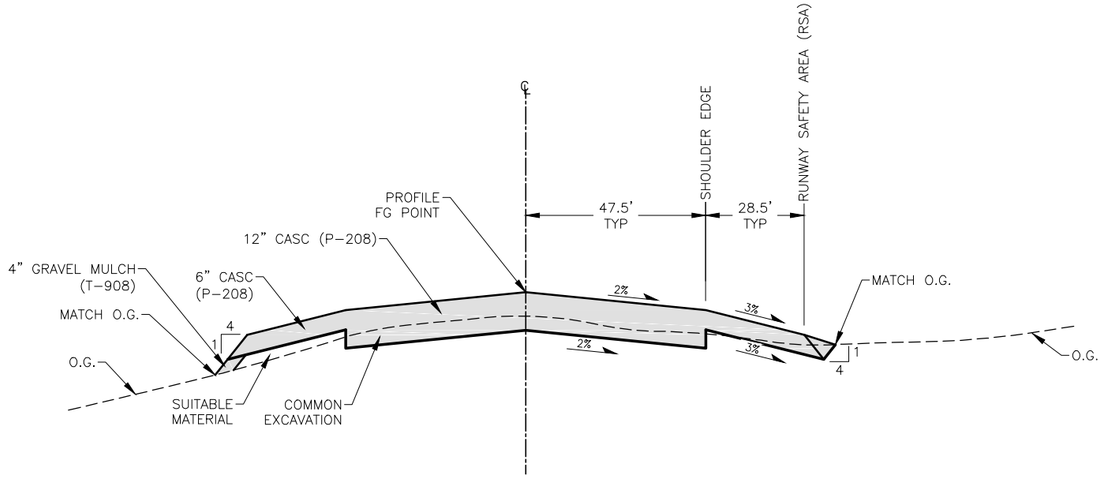

1/16 RUNWAY TYPICAL SECTION
NOT TO SCALE
STA 110+00 TO 112+53

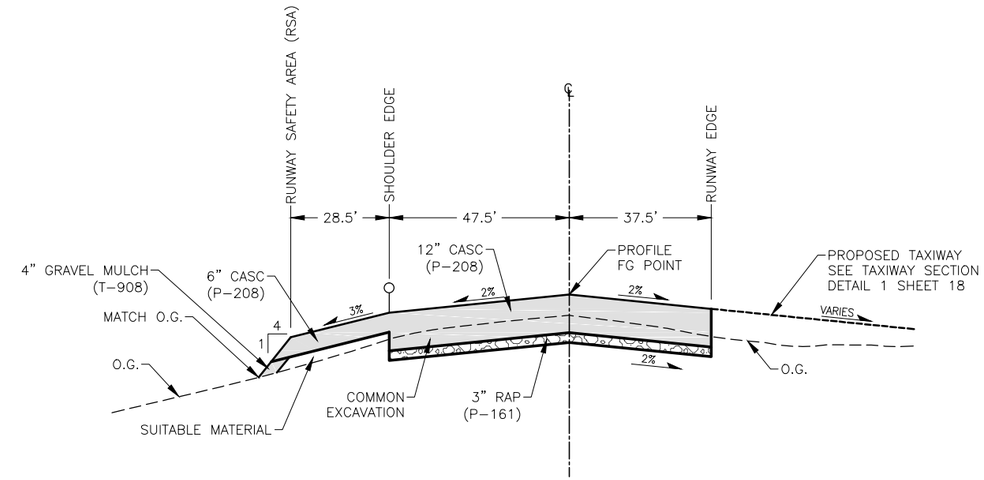

2/16 RUNWAY TYPICAL SECTION
NOT TO SCALE
STA 112+53 TO 114+20.50

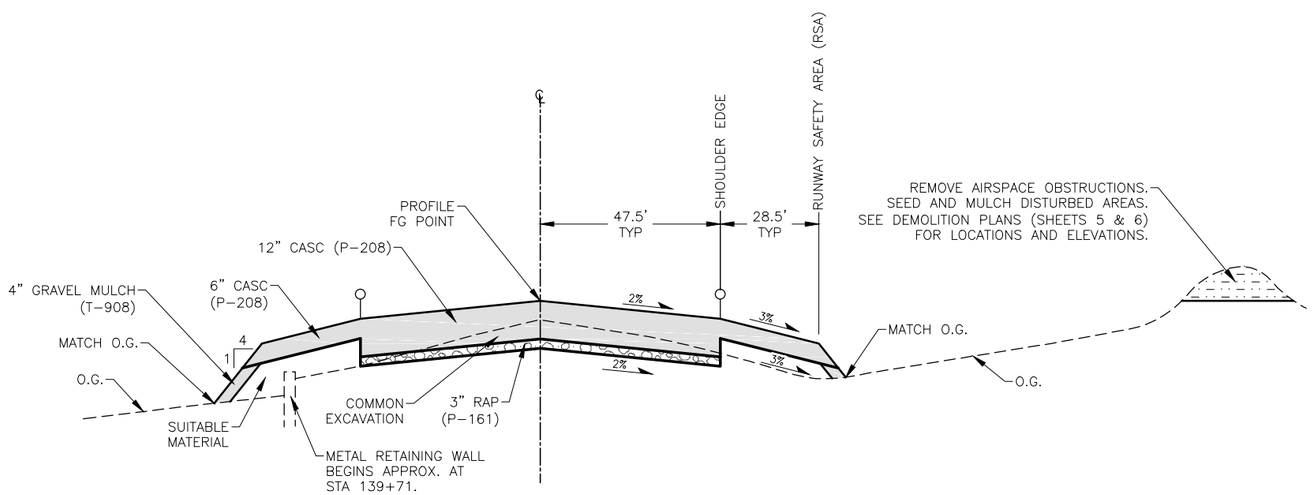

3/16 RUNWAY TYPICAL SECTION
NOT TO SCALE
STA 114+20.50 TO 126+75
STA 133+25 TO 145+75*

*(APPLY TYPICAL SECTION 4/16 ON THE RIGHT SIDE FROM STA 136+95 TO 137+05.)

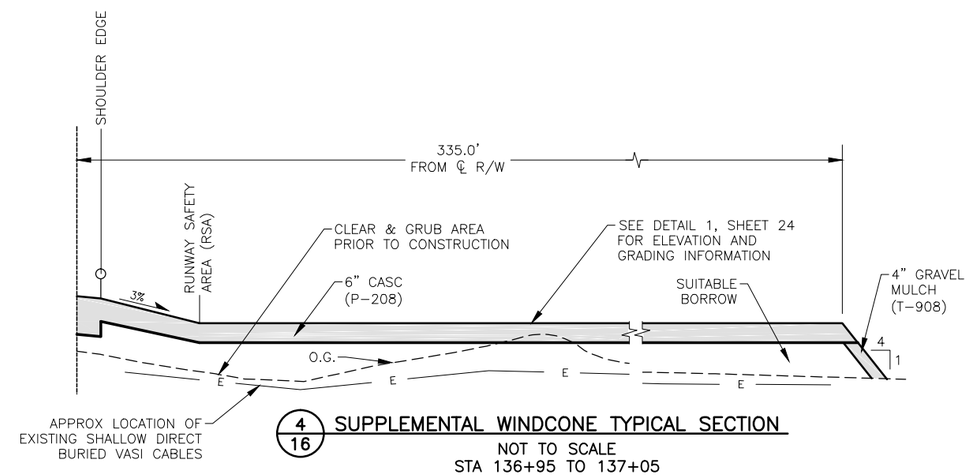

4/16 SUPPLEMENTAL WINDCONE TYPICAL SECTION
NOT TO SCALE
STA 136+95 TO 137+05

LEGEND

- CRUSHED AGGREGATE SURFACE COURSE (CASC)
- CUT
- RAP

NOTES:

1. INSTALL DUST PALLIATIVE ON ALL CASC SURFACES.

BY	DATE	REVISION

STATE OF ALASKA
DEPARTMENT OF TRANSPORTATION
AND PUBLIC FACILITIES
CENTRAL REGION

HOOPER BAY AIRPORT
HOOPER BAY, ALASKA
AIRPORT IMPROVEMENTS
PROJECT No. 57419
AIP No. 3-02-0126-006-2014
TYPICAL SECTIONS

DATE: 1/30/2015
SHEET: 16 OF 28
AS-BUILT SHEET:

Date Revised: 1/30/2015, 2:48 PM
Layout Name: TYPICAL SECTIONS 1
File Path and Name: W:\Projects\Hooper Bay\Hooper Bay Airport Improvements 57419\Final Drawings\HPB 57419-DETAILS.dwg

Designed By: BT
Drawn By: R.B
Checked By: MHH

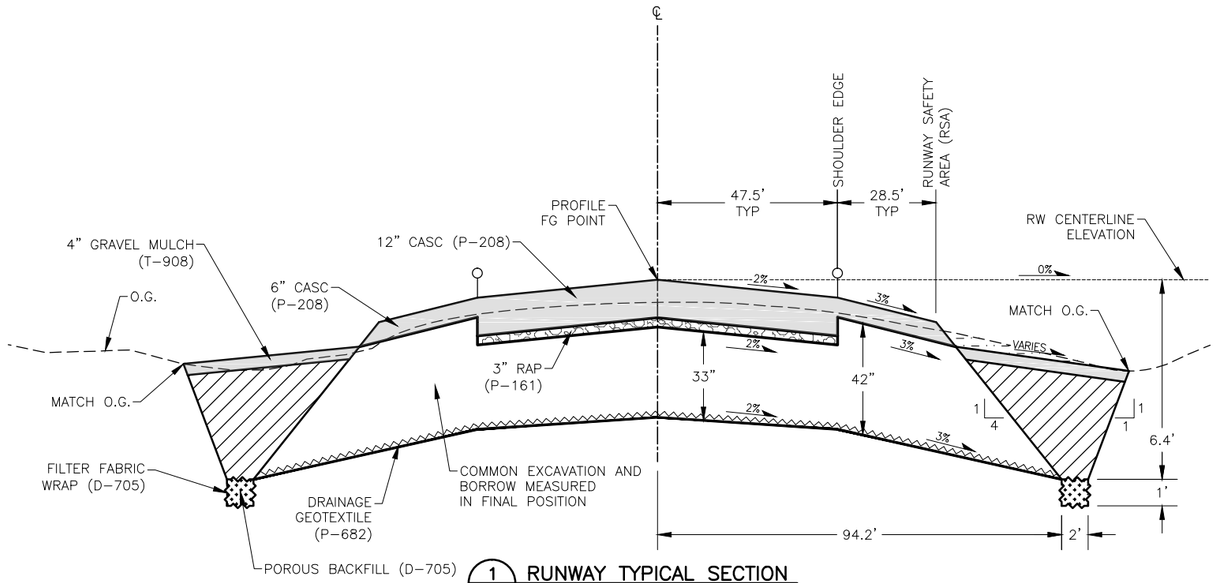

1/17 RUNWAY TYPICAL SECTION

NOT TO SCALE

STA 126+75 TO 133+25

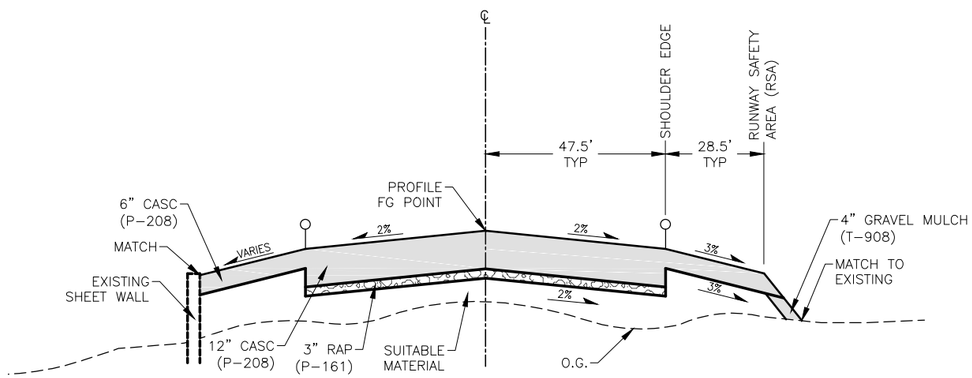

2/17 RUNWAY TYPICAL SECTION

NOT TO SCALE

STA 145+75 TO 146+00

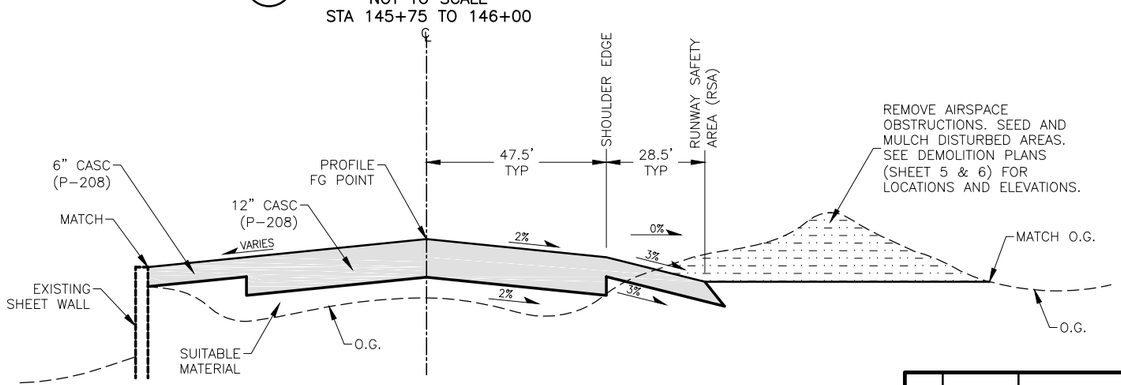

3/17 RUNWAY TYPICAL SECTION

NOT TO SCALE

STA 146+00 TO 149+00

LEGEND

- CRUSHED AGGREGATE SURFACE COURSE (CASC)
- CUT
- EXCAVATE AND BACKFILL SUBGRADE
- RAP

NOTES:

1. INSTALL DUST PALLIATIVE ON ALL CASC SURFACES.

BY	DATE	REVISION

STATE OF ALASKA
DEPARTMENT OF TRANSPORTATION AND PUBLIC FACILITIES
CENTRAL REGION

HOOPER BAY AIRPORT
HOOPER BAY, ALASKA
AIRPORT IMPROVEMENTS
PROJECT No. 57419
AIP No. 3-02-0126-006-2014
TYPICAL SECTIONS

DATE: 1/30/2015
SHEET: 17 OF 28
AS-BUILT SHEET:

Date Revised:	1/30/2015, 2:48 PM
Layout Name:	TYPICAL SECTIONS_2
File Path and Name:	W:\Projects\Hooper Bay\Hooper Bay Airport Improvements 57419\Final Drawings\HPB 57419-DETAILS.dwg
Designed By:	BT
Drawn By:	RJB
Checked By:	MHH

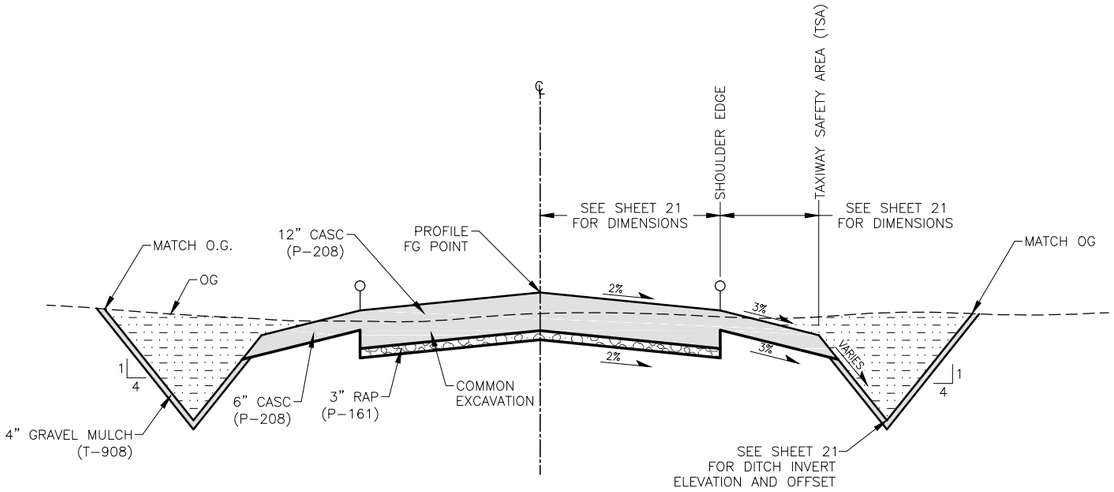

1/18 TAXIWAY TYPICAL SECTION
NOT TO SCALE

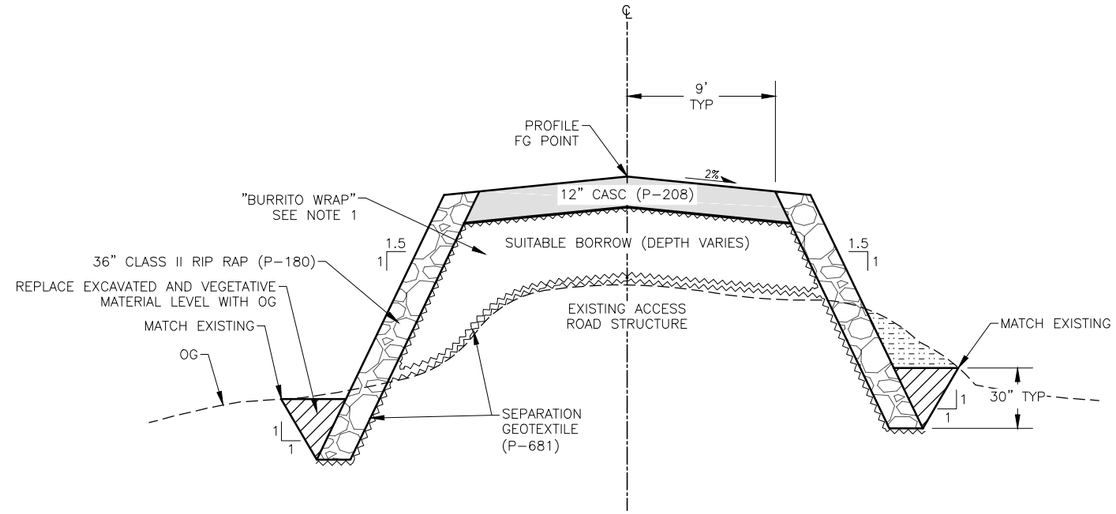

3/18 ACCESS ROAD RECONSTRUCTION
NOT TO SCALE

LEFT SIDE	RIGHT SIDE
STA 9+60 TO 50+37	STA 6+00 TO 49+95

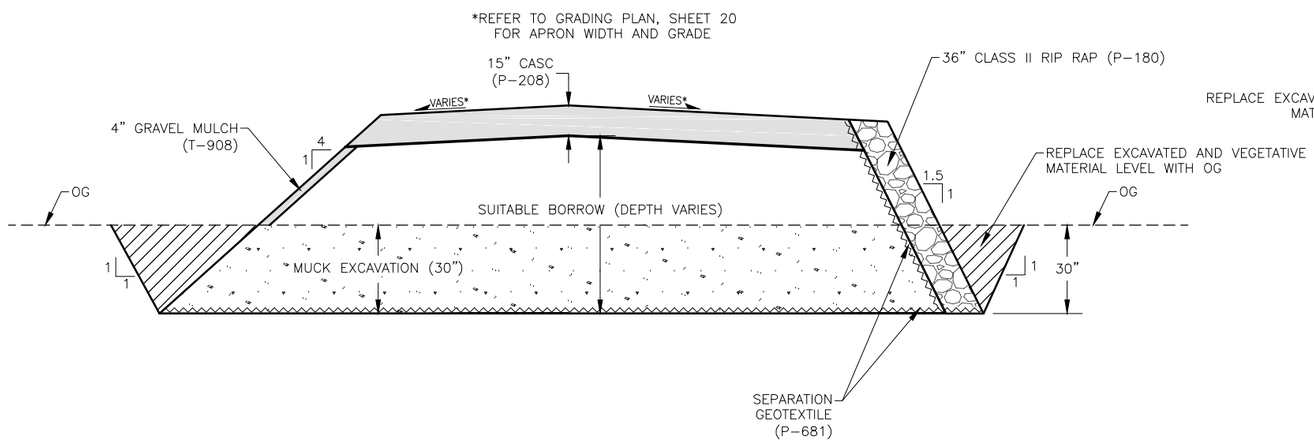

2/18 APRON SECTION
NOT TO SCALE

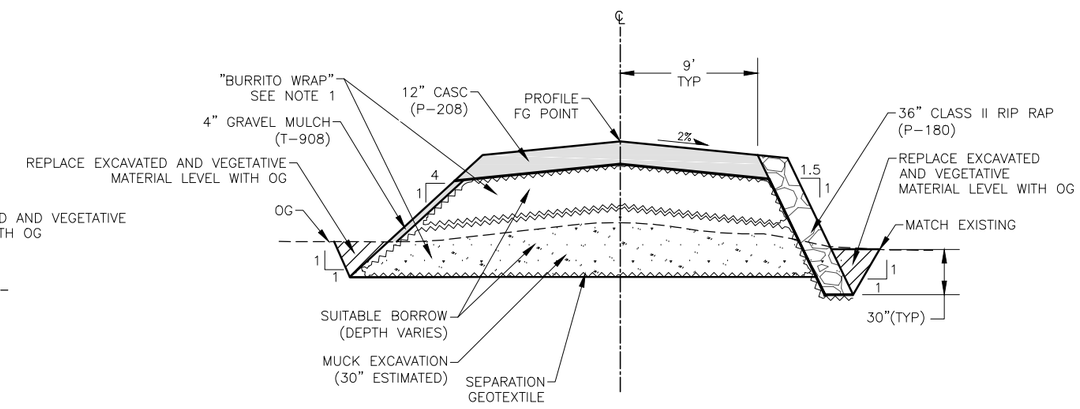

4/18 ACCESS ROAD EXTENSION
NOT TO SCALE
STA 0+9.03 TO 9+49.19

LEGEND

- CRUSHED AGGREGATE SURFACE COURSE (CASC)
- CUT
- EXCAVATE AND BACKFILL SUBGRADE
- MUCK EXCAVATE
- RIP RAP
- RAP

NOTES:

1. USE SEPARATION GEOTEXTILE TO "BURRITO WRAP" BORROW IN LAYERS OF 12–30 INCHES TO ACHIEVE DEPTH NEEDED
2. INSTALL DUST PALLIATIVE ON ALL CASC SURFACES.

BY	DATE	REVISION

STATE OF ALASKA
DEPARTMENT OF TRANSPORTATION
AND PUBLIC FACILITIES
CENTRAL REGION

HOOPER BAY AIRPORT
HOOPER BAY, ALASKA
AIRPORT IMPROVEMENTS
PROJECT No. 57419
AIP No. 3-02-0126-006-2014
TYPICAL SECTIONS

DATE: 1/30/2015
SHEET: 18 OF 28
AS-BUILT SHEET:

Designed By: BT
Drawn By: RJB
Checked By: MHH
Date Revised: 1/30/2015, 2:48 PM
Layout Name: TYPICAL SECTIONS_3
File Path and Name: W:\Projects\Hooper Bay\Hooper Bay Airport Improvements 57419\Final Drawings\HPB 57419-DETAILS.dwg

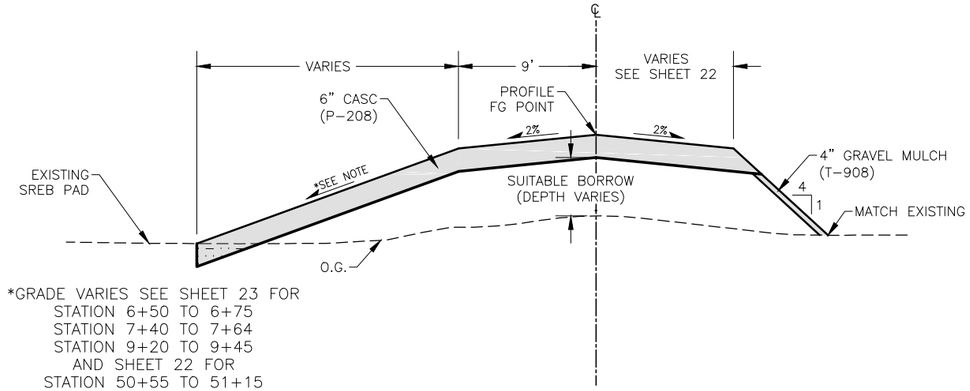

1/19 ACCESS ROAD
NOT TO SCALE

LEFT SIDE	RIGHT SIDE
STA 6+50 TO 6+75	NOT USED
STA 7+40 TO 7+64	
STA 9+20 TO 9+45	
STA 50+55.00 TO 51+15.00	

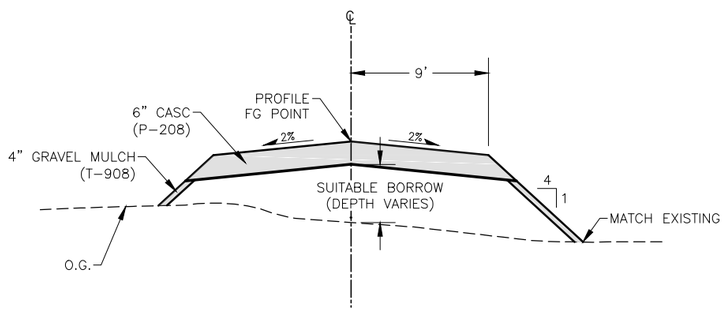

2/19 ACCESS ROAD
NOT TO SCALE

LEFT SIDE	RIGHT SIDE
STA 51+15 TO 51+50	STA 51+00 TO 52+00

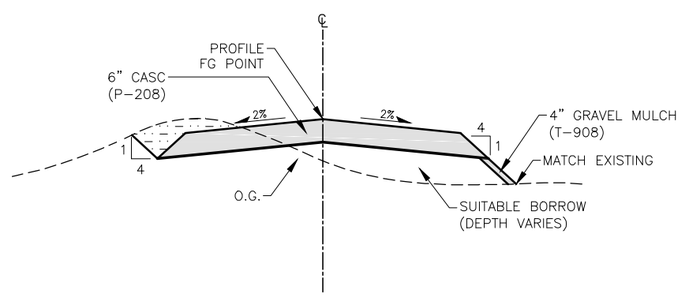

4/19 ACCESS ROAD
NOT TO SCALE

LEFT SIDE	RIGHT SIDE
STA 51+50 TO 52+00	NOT USED

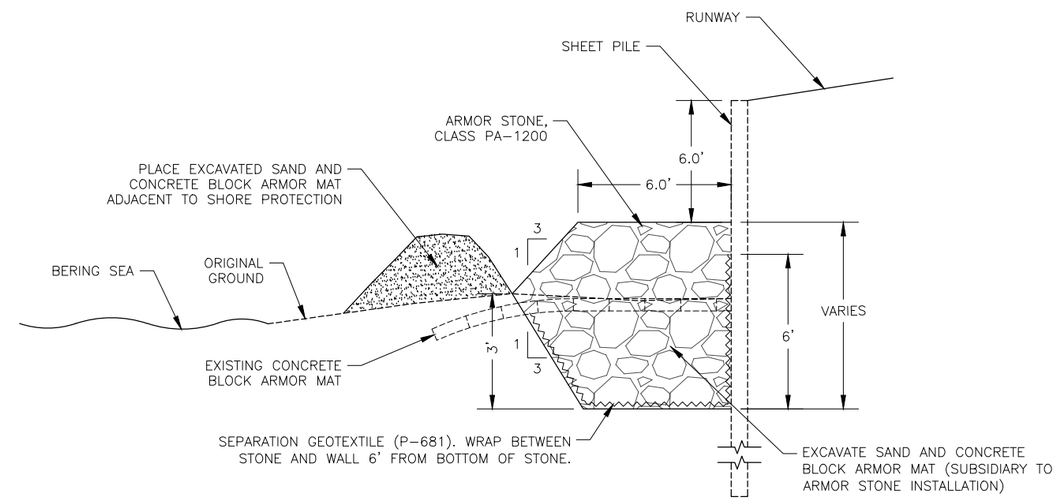

3/19 ARMORING FOR SHEET PILE WALL
NOT TO SCALE

LEGEND

- CRUSHED AGGREGATE SURFACE COURSE (CASC)
- CUT
- EXCAVATED SAND
- ARMOR STONE
- RAP

NOTES:

1. USE SEPARATION GEOTEXTILE TO "BURRITO WRAP" BORROW IN LAYERS OF 12-30 INCHES TO ACHIEVE DEPTH NEEDED
2. INSTALL DUST PALLIATIVE ON ALL CASC SURFACES.

BY	DATE	REVISION

STATE OF ALASKA
DEPARTMENT OF TRANSPORTATION
AND PUBLIC FACILITIES
CENTRAL REGION

HOOPER BAY AIRPORT
HOOPER BAY, ALASKA
AIRPORT IMPROVEMENTS
PROJECT No. 57419
AIP No. 3-02-0126-006-2014
TYPICAL SECTIONS

DATE: 1/30/2015
SHEET: 19 OF 28
AS-BUILT SHEET:

Designed By:	BT
Drawn By:	RJB
Checked By:	MHH
Date Revised:	1/30/2015, 2:49 PM
Layout Name:	TYPICAL SECTIONS 4
File Path and Name:	W:\Projects\Hooper Bay\Hooper Bay Airport Improvements 57419\Final Drawings\HPB 57419-DETAILS.dwg

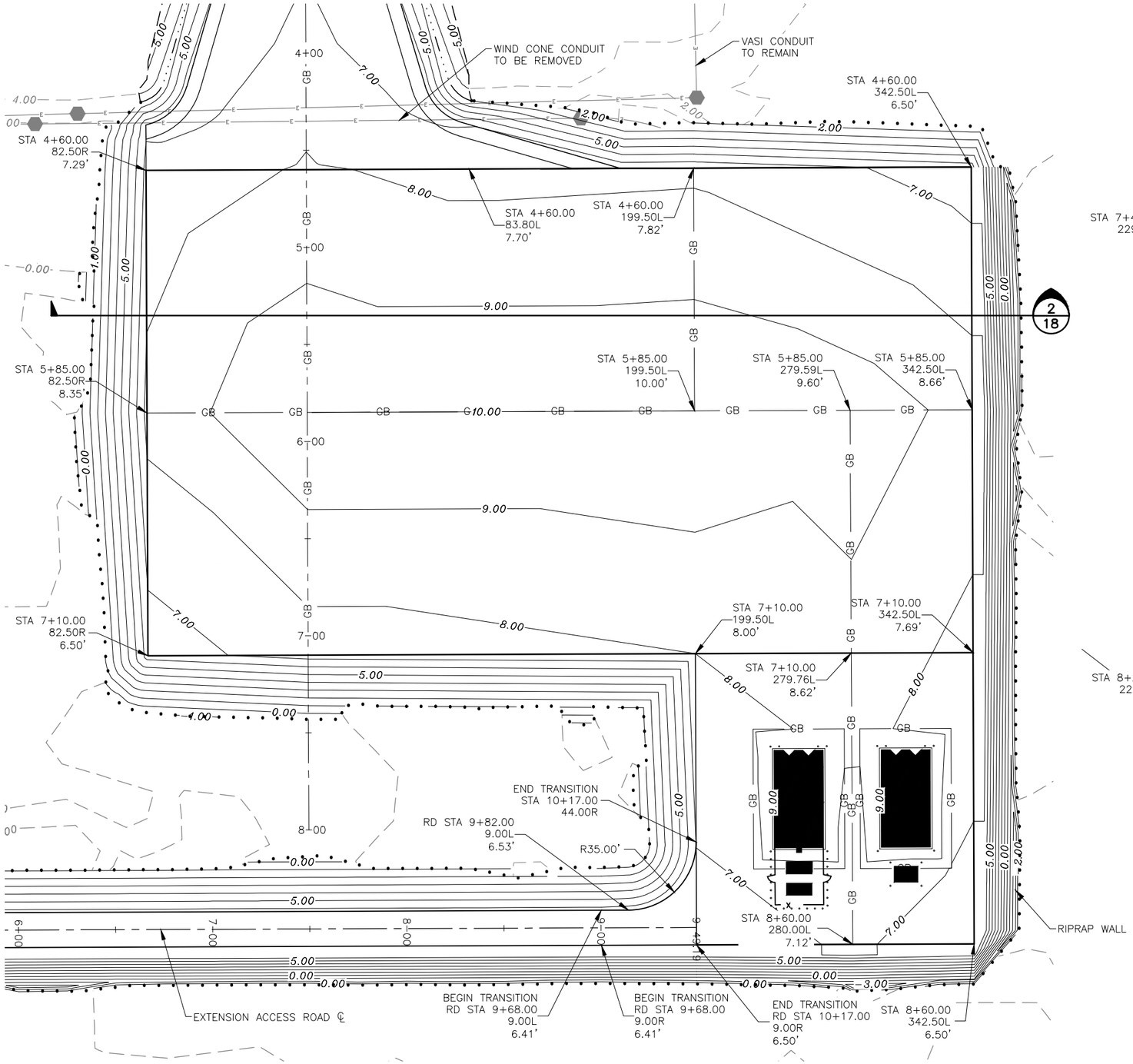

1/20 APRON GRADING

30' 15' 0 30' 60'

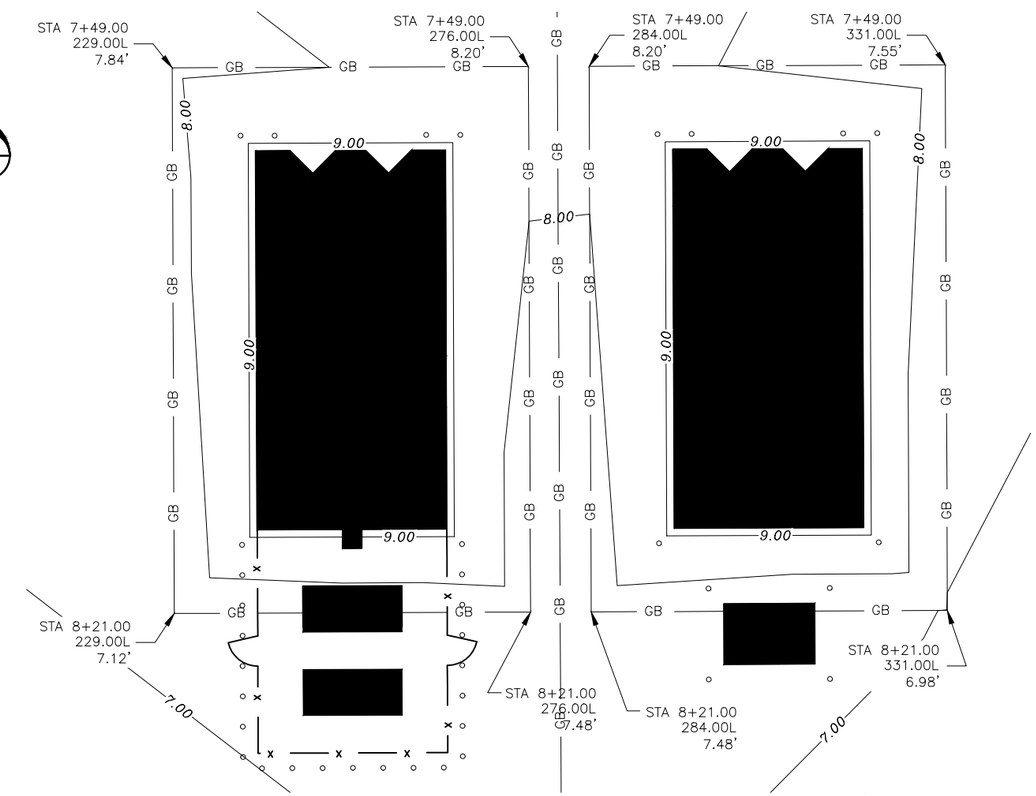

2/20 SREB PAD GRADING

10' 5' 0 10' 20'

Date Revised:	1/30/2015, 8:23 AM	Designed By:	BT
Layout Name:	APRON LAYOUT & GRADING PLAN	Drawn By:	RJB
File Path and Name:	W:\Projects\Hooper Bay\Hooper Bay Airport Improvements 57419\Final Drawings\HPB 57419-Grading.dwg	Checked By:	MHH

BY	DATE	REVISION

STATE OF ALASKA
DEPARTMENT OF TRANSPORTATION AND PUBLIC FACILITIES
CENTRAL REGION

HOOPER BAY AIRPORT
HOOPER BAY, ALASKA
AIRPORT IMPROVEMENTS
PROJECT No. 57419
AIP No. 3-02-0126-006-2014
APRON LAYOUT & GRADING PLAN

DATE: 1/30/2015
SHEET: 20 OF 28
AS-BUILT SHEET:

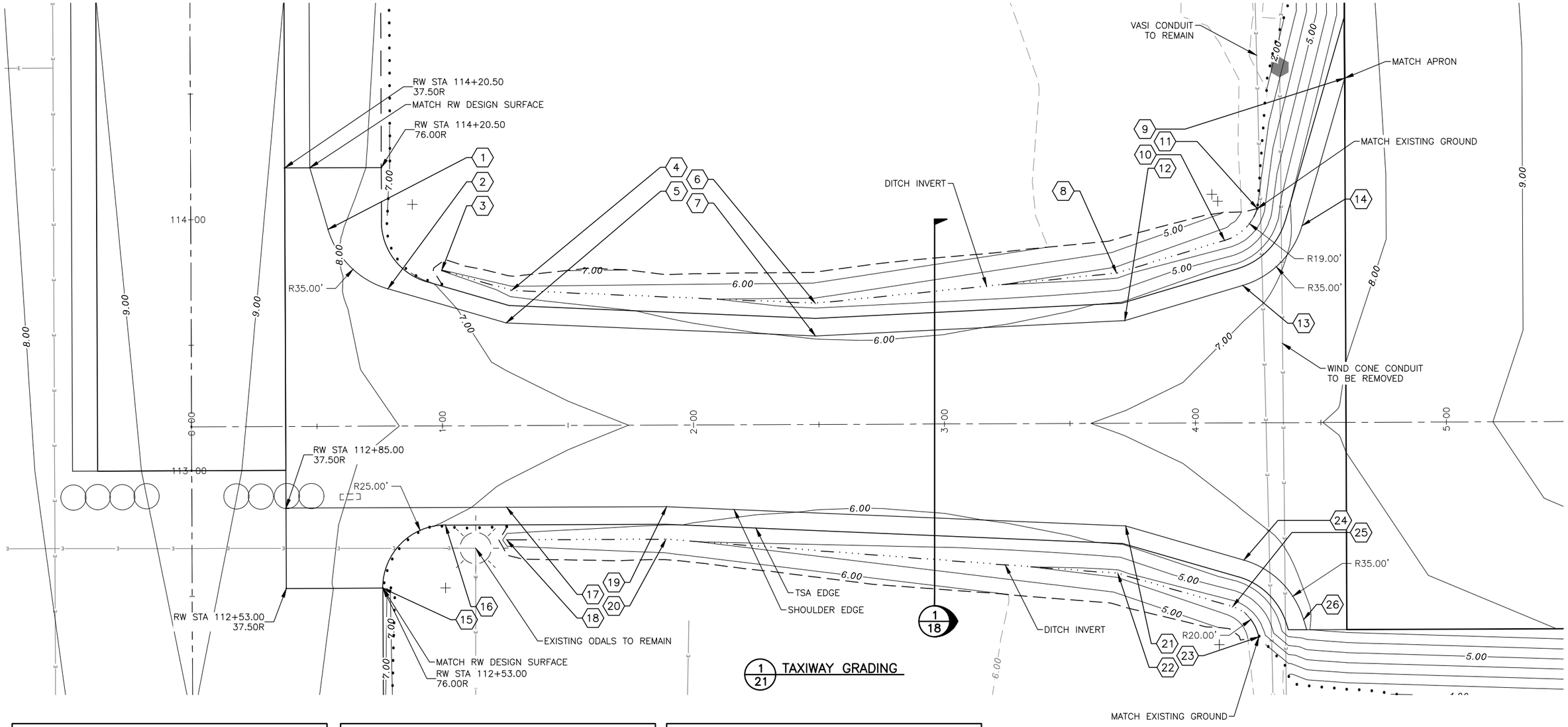

GRADING PLAN SCHEDULE				
POINT	STATION	OFFSET	ELEVATION	REMARKS
1	0+54.70	78.44L	8.19	PC STRUCTURAL EDGE
2	0+78.44	54.70L	7.54	PT STRUCTURAL EDGE
3	0+99.90	61.95L	6.00	BEGIN DITCH
4	1+27.70	53.81L	5.72	PI DITCH
5	1+25.49	40.90L	6.62	PI STRUCTURAL EDGE
6	2+48.75	48.25L	4.65	PI DITCH
7	2+48.75	35.24L	5.98	PI STRUCTURAL EDGE
8	3+68.85	59.78L	3.59	PI DITCH
9	4+60.00	137.09L	7.76	PI STRUCTURAL EDGE

GRADING PLAN SCHEDULE				
POINT	STATION	OFFSET	ELEVATION	REMARKS
10	4+11.87	72.67L	3.24	PC DITCH
11	4+25.00	85.27L	3.03	END DITCH
12	3+72.01	40.90L	6.28	PI STRUCTURAL EDGE
13	4+19.06	54.70L	6.78	PC STRUCTURAL EDGE
14	4+42.80	78.44L	7.14	PT STRUCTURAL EDGE
15	0+76.00	64.50R	7.41	PC EDGE PAVEMENT
16	1+01.00	39.50R	6.95	PT EDGE PAVEMENT
17	1+25.40	32.50R	6.79	STRUCTURAL EDGE
18	1+25.40	45.50R	5.60	BEGIN DITCH

GRADING PLAN SCHEDULE				
POINT	STATION	OFFSET	ELEVATION	REMARKS
19	1+89.16	32.50R	6.25	PI STRUCTURAL EDGE
20	1+88.84	45.50R	5.10	PI DITCH
21	3+72.01	40.90R	6.28	PI STRUCTURAL EDGE
22	3+68.85	59.78R	3.74	PI DITCH
23	4+25.00	85.27R	3.25	END DITCH
24	4+19.06	54.70R	6.67	PC STRUCTURAL EDGE
25	4+14.49	73.22R	3.38	PC DITCH
26	4+42.80	78.44R	6.94	PT STRUCTURAL EDGE

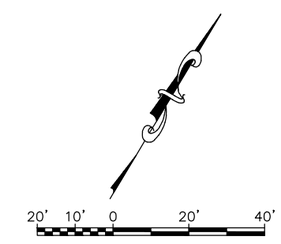

BY	DATE	REVISION

STATE OF ALASKA
DEPARTMENT OF TRANSPORTATION
AND PUBLIC FACILITIES
CENTRAL REGION

HOOPER BAY AIRPORT
HOOPER BAY, ALASKA
AIRPORT IMPROVEMENTS
PROJECT No. 57419
AIP No. 3-02-0126-006-2014
TAXIWAY & DITCH
LAYOUT & GRADING PLAN

DATE: 1/30/2015
SHEET: 21 OF 28
AS-BUILT SHEET:

Designed By: BT
Drawn By: RJB
Checked By: MHH

Date Revised: 1/30/2015, 8:23 AM
Layout Name: TAXIWAY & DITCH LAYOUT & GRADING PLAN
File Path and Name: W:\Projects\Hooper Bay\Hooper Bay Airport Improvements 57419\Final Drawings\HPB 57419-Grading.dwg

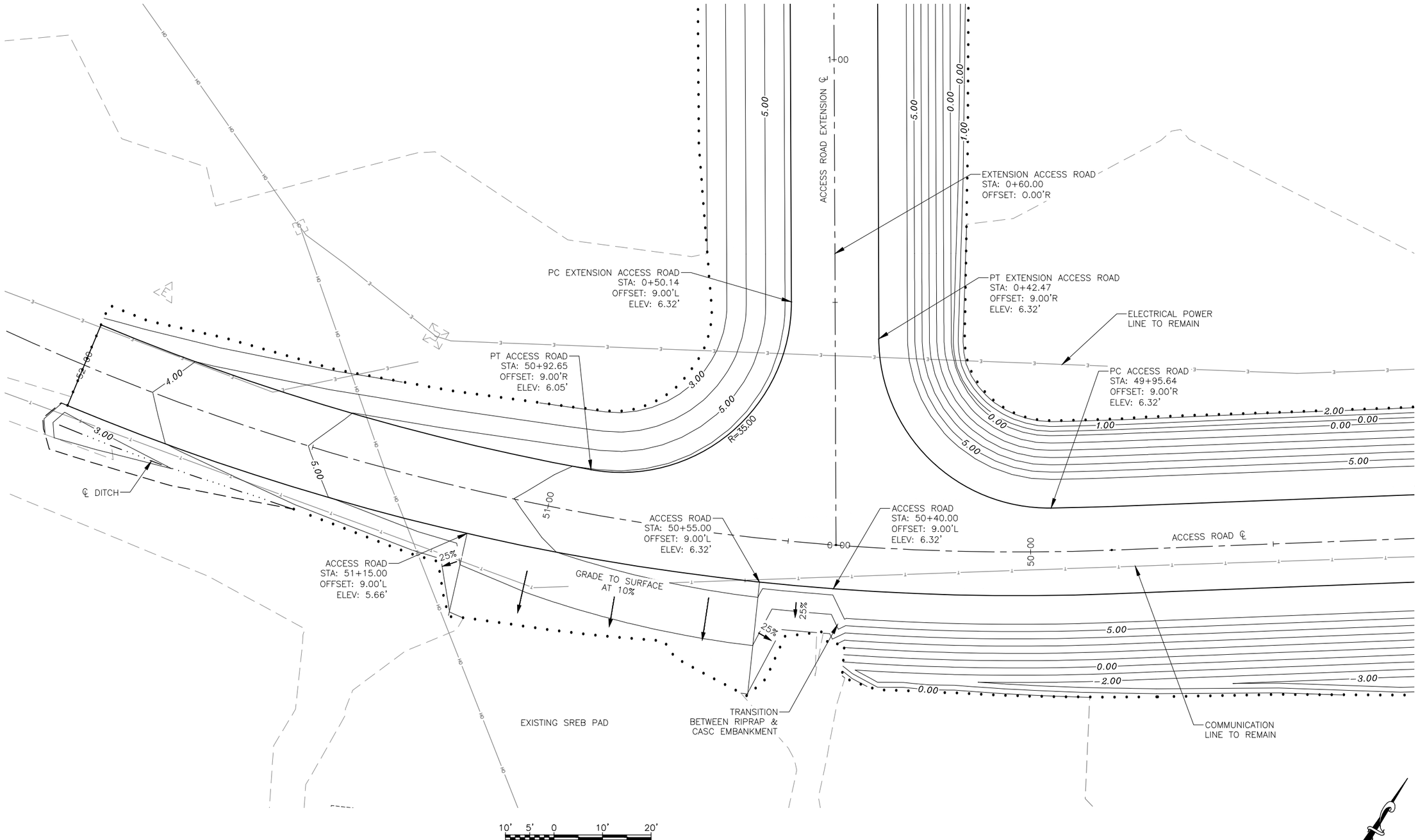

1/22 INTERSECTION LAYOUT & GRADING

Date Revised:	1/30/2015, 8:23 AM
Layout Name:	INTERSECTION AREA LAYOUT & GRADING PLAN
File Path and Name:	W:\Projects\Hooper Bay\Hooper Bay Airport Improvements 57419\Final Drawings\HPB 57419-Grading.dwg

Designed By:	BT
Drawn By:	RJB
Checked By:	MHH

BY	DATE	REVISION

STATE OF ALASKA
DEPARTMENT OF TRANSPORTATION
AND PUBLIC FACILITIES
CENTRAL REGION

HOOPER BAY AIRPORT
HOOPER BAY, ALASKA
AIRPORT IMPROVEMENTS
PROJECT No. 57419
AIP No. 3-02-0126-006-2014
INTERSECTION AREA
LAYOUT & GRADING PLAN

DATE: 1/30/2015
SHEET: 22 OF 28
AS-BUILT SHEET:

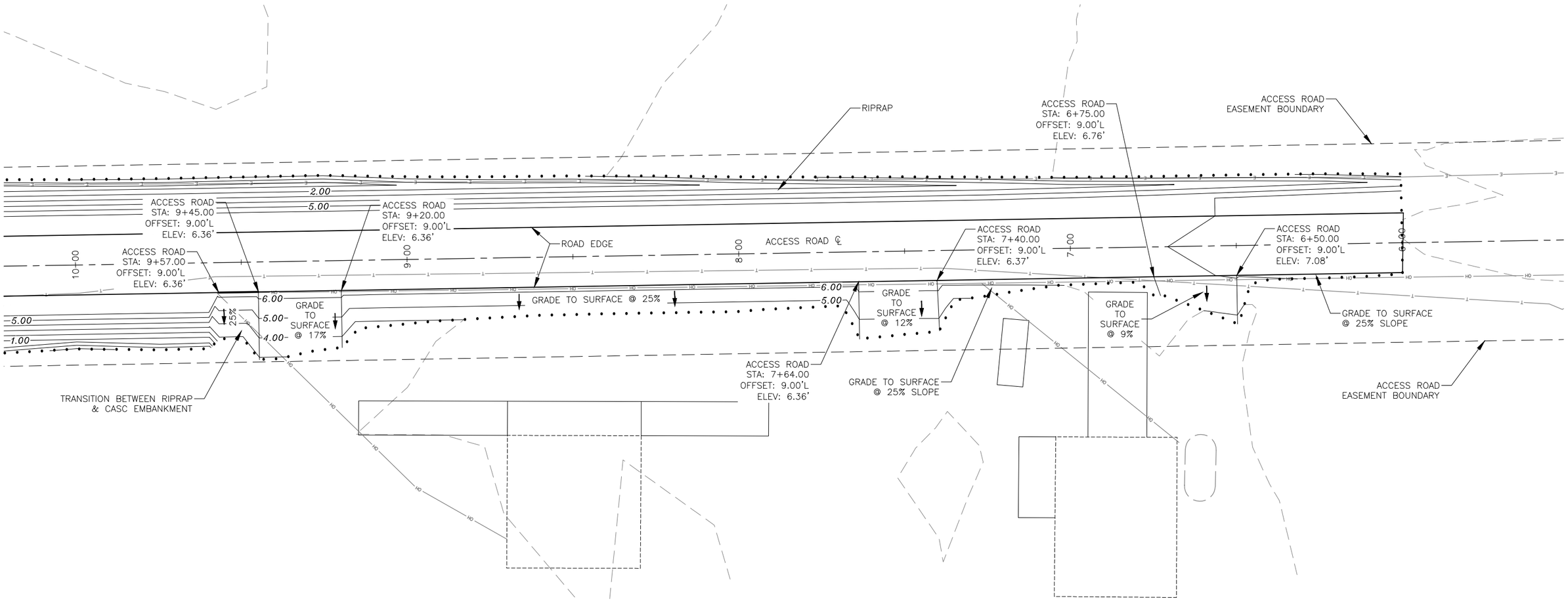

15' 7.5' 0 15' 30'

1/23 INTERSECTION LAYOUT & GRADING

Designed By:	BT
Drawn By:	RJB
Checked By:	MHH

Date Revised:	2/03/2015, 1:45 PM
Layout Name:	APPROACHES LAYOUT & GRADING PLAN
File Path and Name:	W:\Projects\Hooper Bay\Hooper Bay Airport Improvements 57419\Final Drawings\HPB 57419-Grading.dwg

BY	DATE	REVISION

STATE OF ALASKA
DEPARTMENT OF TRANSPORTATION
AND PUBLIC FACILITIES
CENTRAL REGION

HOOPER BAY AIRPORT
HOOPER BAY, ALASKA
AIRPORT IMPROVEMENTS
PROJECT No. 57419
AIP No. 3-02-0126-006-2014
APPROACHES LAYOUT & GRADING PLAN

DATE: 2/3/2015
SHEET: 23 OF 28
AS-BUILT SHEET:

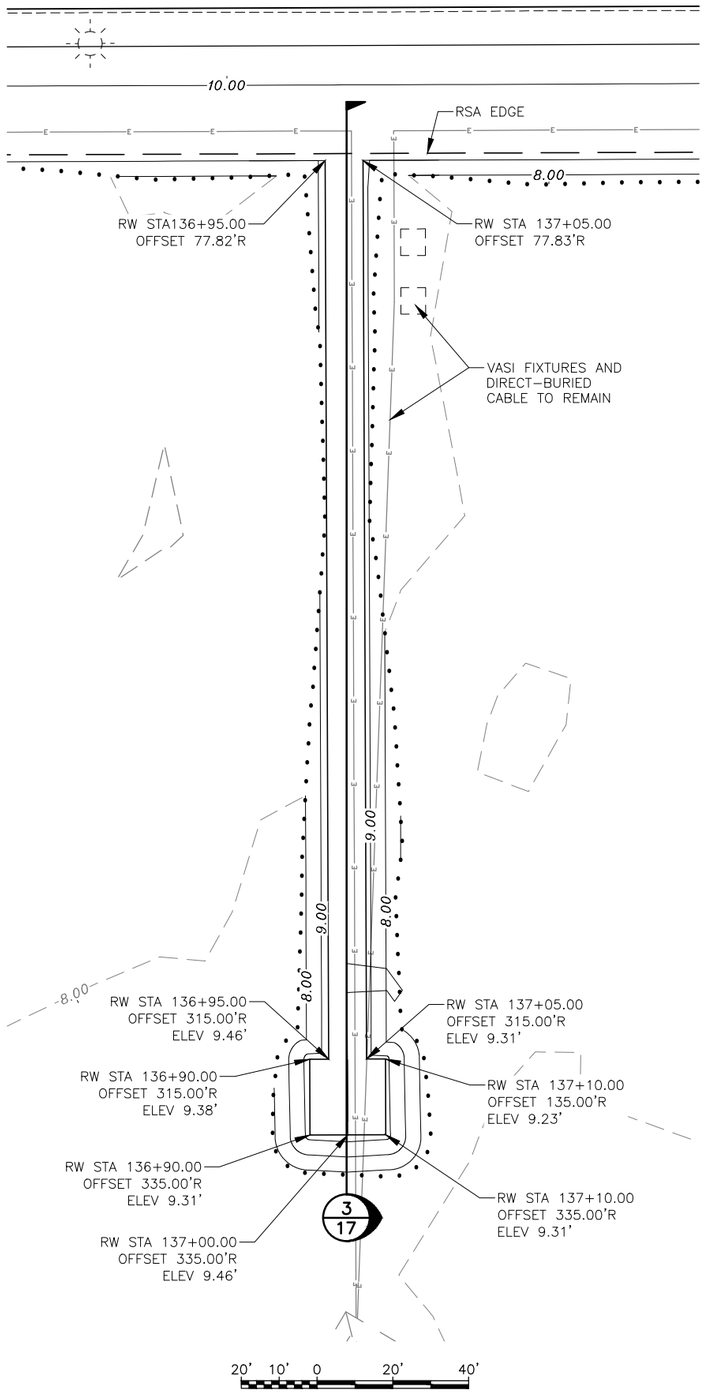

1/24 SUPLEMENTAL WIND CONE GRADING

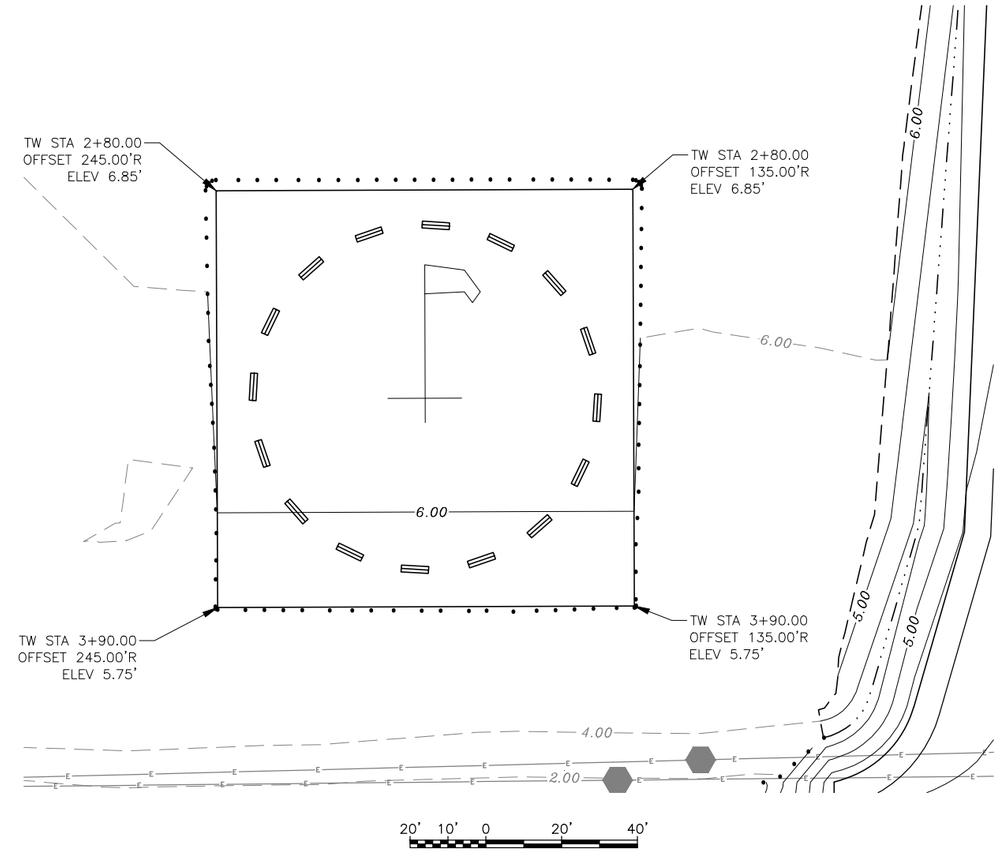

2/24 SEGMENTED CIRCLE GRADING

Date Revised:	1/30/2015, 8:23 AM
Layout Name:	WIND CONE & SEGMENTED CIRCLE GRADING PLAN
File Path and Name:	W:\Projects\Hooper Bay\Hooper Bay Airport Improvements 57419\Final Drawings\HPB 57419-Grading.dwg

Designed By:	BT
Drawn By:	RJB
Checked By:	MHH

BY	DATE	REVISION

STATE OF ALASKA
DEPARTMENT OF TRANSPORTATION
AND PUBLIC FACILITIES
CENTRAL REGION

HOOPER BAY AIRPORT
HOOPER BAY, ALASKA
AIRPORT IMPROVEMENTS
PROJECT No. 57419
AIP No. 3-02-0126-006-2014
WIND CONE & SEGMENTED
CIRCLE GRADING PLAN

DATE: 1/30/2015
SHEET: 24 OF 28
AS-BUILT SHEET:

PIECE	DESCRIPTION	QUANTITY
A	2-1/2" SQ GALV STEEL PERF TUBE, 60", NOTCHED	2
B	2-1/2" SQ GALV STEEL PERF TUBE, 76-1/2"	4
C	2-1/2" SQ GALV STEEL PERF TUBE, 19-1/2"	4
D	2" SQ GALV STEEL PERF TUBE, 96"	4
E	24" X 96" X 0.08" - 0.09" THICK ALUMINUM 6061-T6 OR 5052-H36/38	2
	3/8" X 3" GALV. BOLT, NUT	24
	3/8" X 5" GALV. BOLT, NUT	4
	3/8" X 6" GALV. BOLT, NUT	16
	3/8" GALV. REGULAR WASHER	48
	3/8" X 2" DIA. S.S. FENDER WASHER	40
	24" X 96" REFLECTIVE SHEETING	2

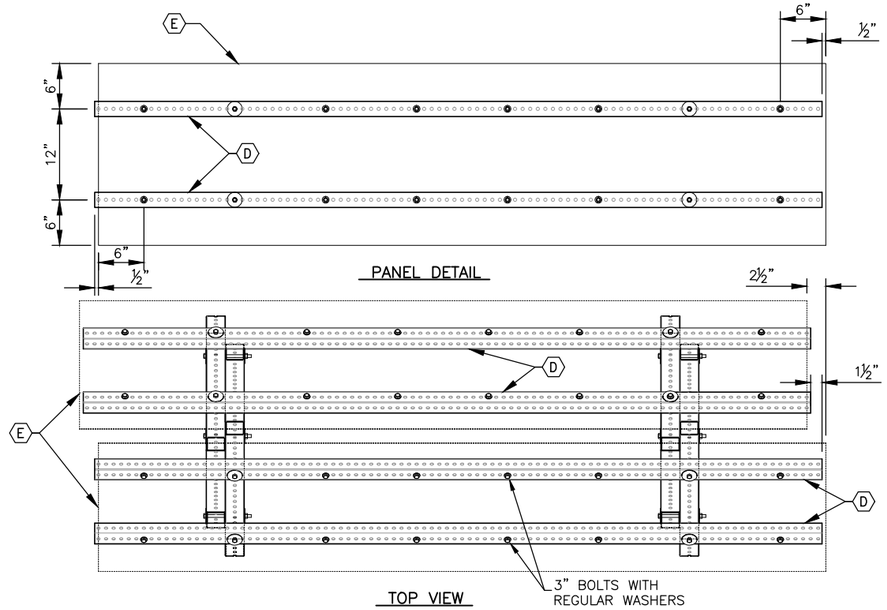

DESIGN NOTES:

Segmented Circle Panels:
Design Reference: FAA AC 150/5345-27E; AC 150/5340-5D; Alaska DOT item: P-640b

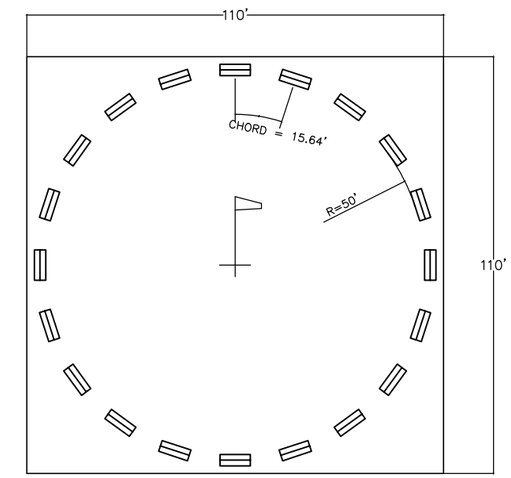

SEGMENTED CIRCLE LAYOUT

NO SCALE

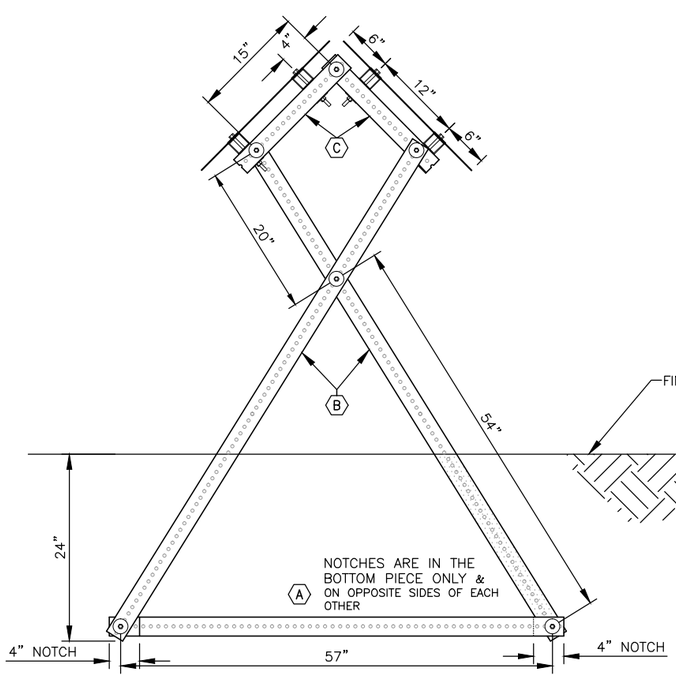

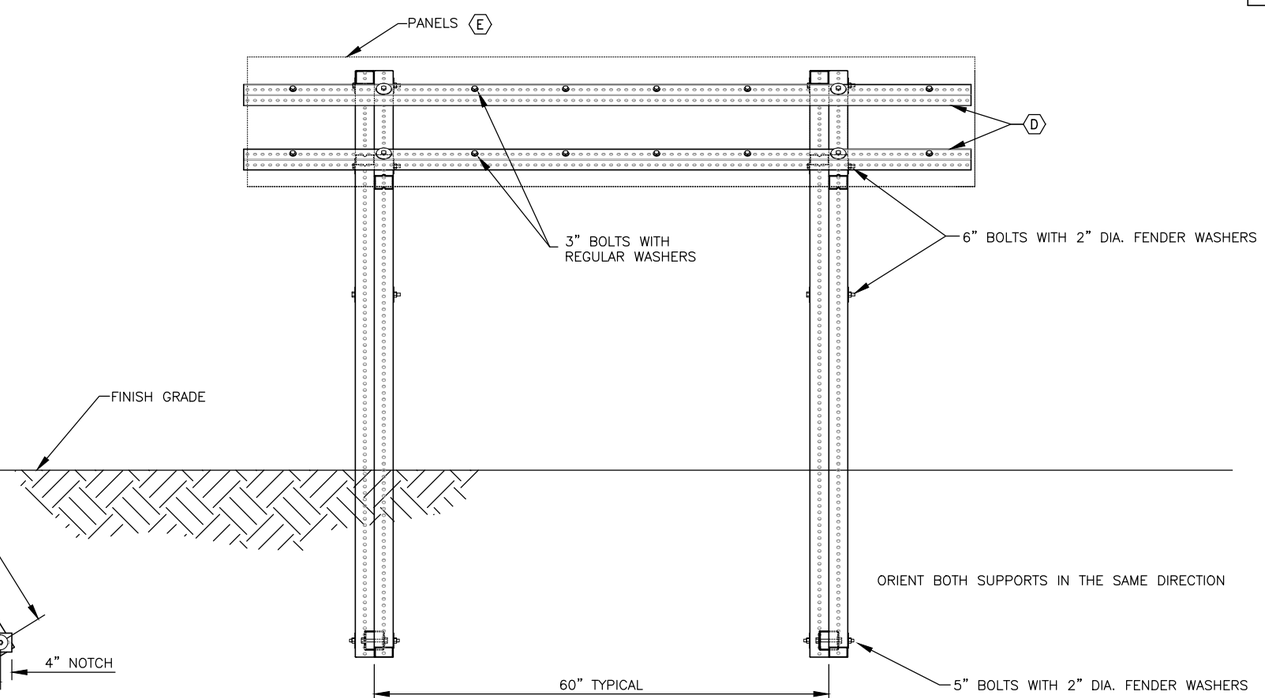

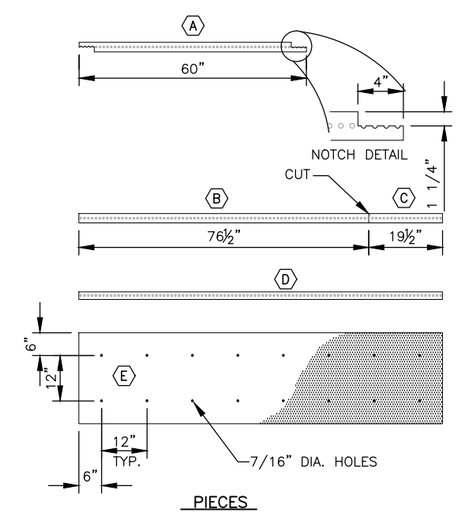

NOTES:

1. CRITICAL ASSEMBLY DIMENSIONS ARE BETWEEN HOLES.
2. PAINT ALL CUT EDGES WITH COLD GALVANIZING.
3. APPLY REFLECTIVE FILM TO PANELS BEFORE ASSEMBLY.
4. LEVEL ASSEMBLY BEFORE BACKFILLING.
5. STEEL PERF TUBE SHALL BE 12-GAGE STEEL, GALVANIZED, WITH 7/16-INCH HOLES PUNCHED OR DRILLED ON ALL SIDES ON 1-INCH CENTERS.

SEGMENTED CIRCLE PANEL ASSEMBLY

NO SCALE

BY	DATE	REVISION

STATE OF ALASKA
DEPARTMENT OF TRANSPORTATION
AND PUBLIC FACILITIES
CENTRAL REGION

HOOPER BAY AIRPORT
HOOPER BAY, ALASKA
AIRPORT IMPROVEMENTS
PROJECT No. 57419
AIP No. 3-02-0126-006-2014
SEGMENTED CIRCLE DETAILS

DATE: 1/30/2015
SHEET: 25 OF 28
AS-BUILT SHEET:

Designed By: BT
Drawn By: RJB
Checked By: MHH
Date Revised: 1/30/2015, 8:24 AM
Layout Name: SEGMENTED CIRCLE DETAILS
File Path and Name: W:\Projects\Hooper Bay\Hooper Bay Airport Improvements 57419\Final Drawings\HPB 57419-DETAILS.dwg

ACCESS ROAD SIGN SUMMARY

POST NUMBER	STATION & OFFSET	TYPE	SIGN	SIZE (IN)	AREA (SF)	SIGN FACES	POSTS: NO. SIZE, TYPE	FRAMED		REMARKS
								YES	NO	
1	10+00 22.0 RT	R2-1	SPEED LIMIT 40	24X30	5.00	NE	1-2.5"-P		X	
2	47+40 22.0 LT	R2-1	SPEED LIMIT 40	24X30	5.00	SW	1-2.5"-P		X	
3	2+24 22.0 RT	R2-1	SPEED LIMIT 40	24X30	5.00	SE	1-2.5"-P		X	
4	5+24 22.0 LT	R2-1	SPEED LIMIT 40	24X30	5.00	NW	1-2.5"-P		X	
5	0+40 24.0 LT	R1-2	YIELD	30X30X30	5.41	N	1-2.5"-P		X	

NOTES:
1. ALL PROPOSED SIGN POST LOCATIONS SHALL BE IN ACCORDANCE WITH STATE OF ALASKA STANDARD DRAWINGS S-05.00, OR AS DIRECTED BY THE ENGINEER.

40' 20' 0 40' 80'

Date Revised:	1/30/2015, 8:24 AM
Layout Name:	SIGNING PLAN
File Path and Name:	W:\Projects\Hooper Bay\Hooper Bay Airport Improvements 57419\Final Drawings\HPB 57419 Signing.dwg

Designed By:	BT
Drawn By:	RJB
Checked By:	MHH

BY	DATE	REVISION

STATE OF ALASKA
DEPARTMENT OF TRANSPORTATION AND PUBLIC FACILITIES
CENTRAL REGION

HOOPER BAY AIRPORT
HOOPER BAY, ALASKA
AIRPORT IMPROVEMENTS
PROJECT No. 57419
AIP No. 3-02-0126-006-2014
SIGNING PLAN

DATE: 1/30/2015
SHEET: 26 OF 28
AS-BUILT SHEET:

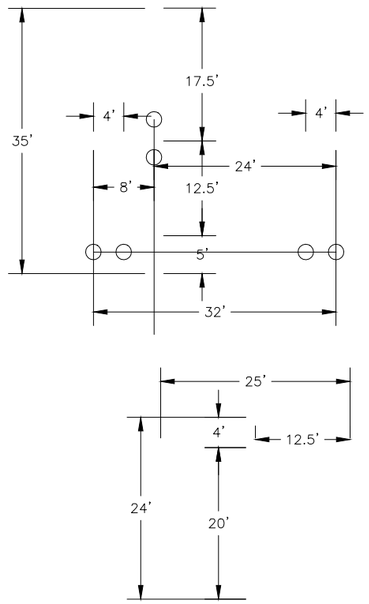

1/27 TIE-DOWN DETAILS

SCALE: NTS

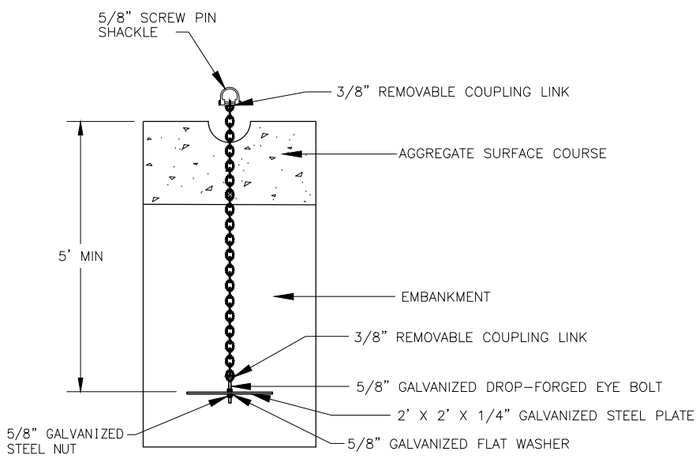

2/27 TYPICAL TIE-DOWN ANCHOR DETAILS

SCALE: NTS

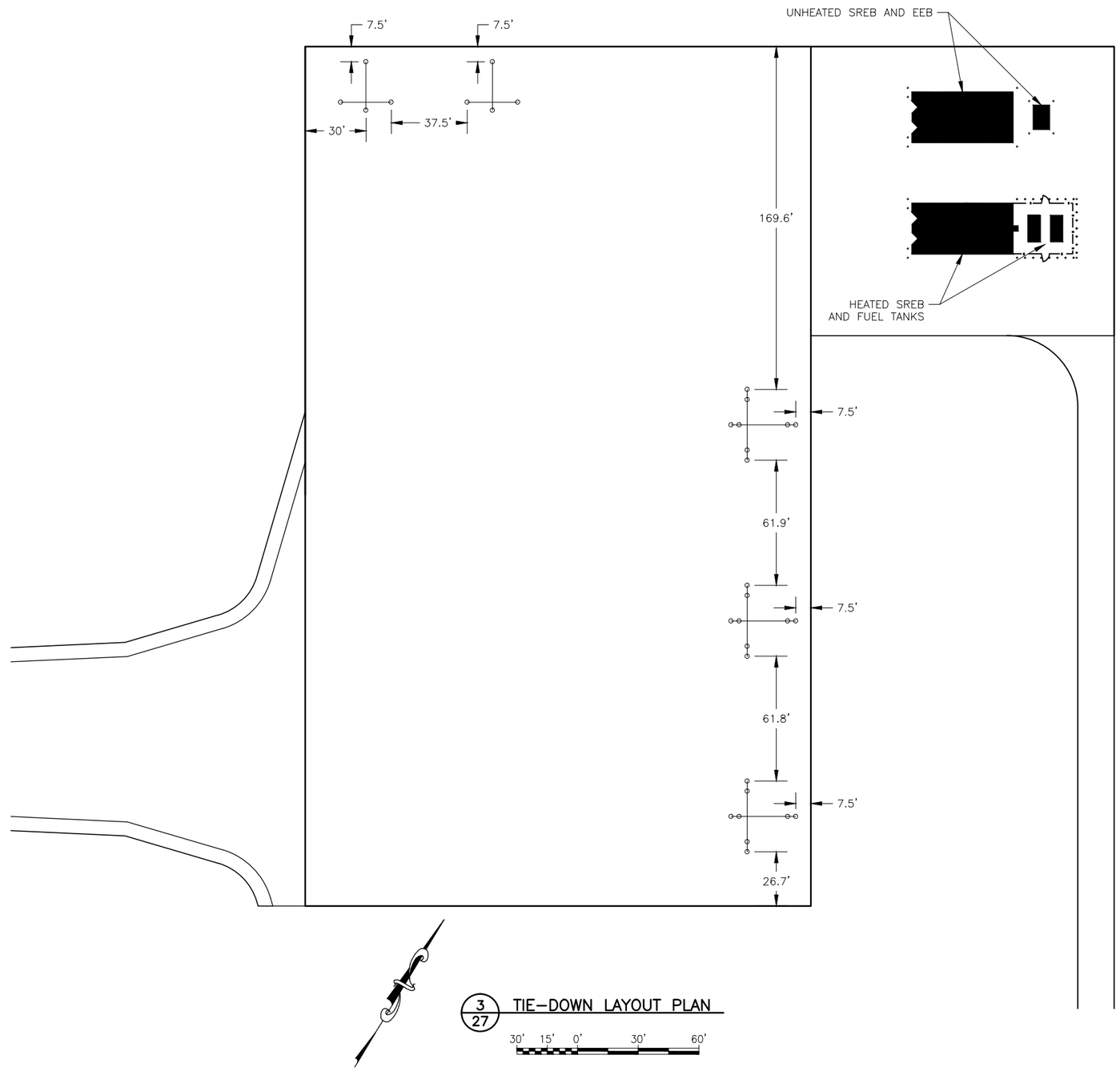

3/27 TIE-DOWN LAYOUT PLAN

BY	DATE	REVISION

STATE OF ALASKA
DEPARTMENT OF TRANSPORTATION AND PUBLIC FACILITIES
CENTRAL REGION

HOOPER BAY AIRPORT
HOOPER BAY, ALASKA
AIRPORT IMPROVEMENTS
PROJECT No. 57419
AIP No. 3-02-0126-006-2014
TIE-DOWN LAYOUT & DETAILS

DATE: 1/30/2015
SHEET: 27 OF 28
AS-BUILT SHEET:

Designed By:	BT
Drawn By:	RJB
Checked By:	MHH
Date Revised:	1/30/2015, 8:24 AM
Layout Name:	TIE-DOWN LAYOUT & DETAILS
File Path and Name:	W:\Projects\Hooper Bay\Hooper Bay Airport Improvements 57419\Final Drawings\HPB 57419-DETAILS.dwg

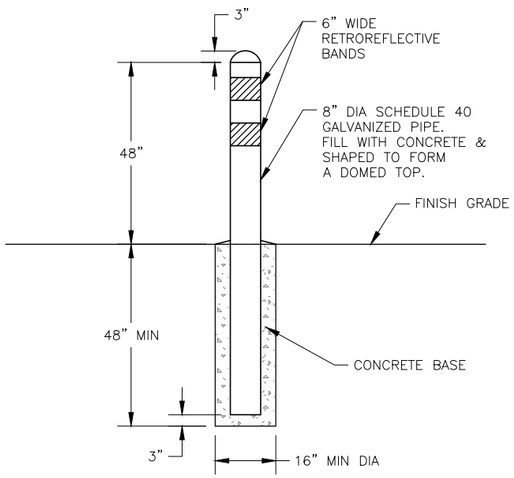

1 / 28 BOLLARD DETAIL

SCALE: NTS

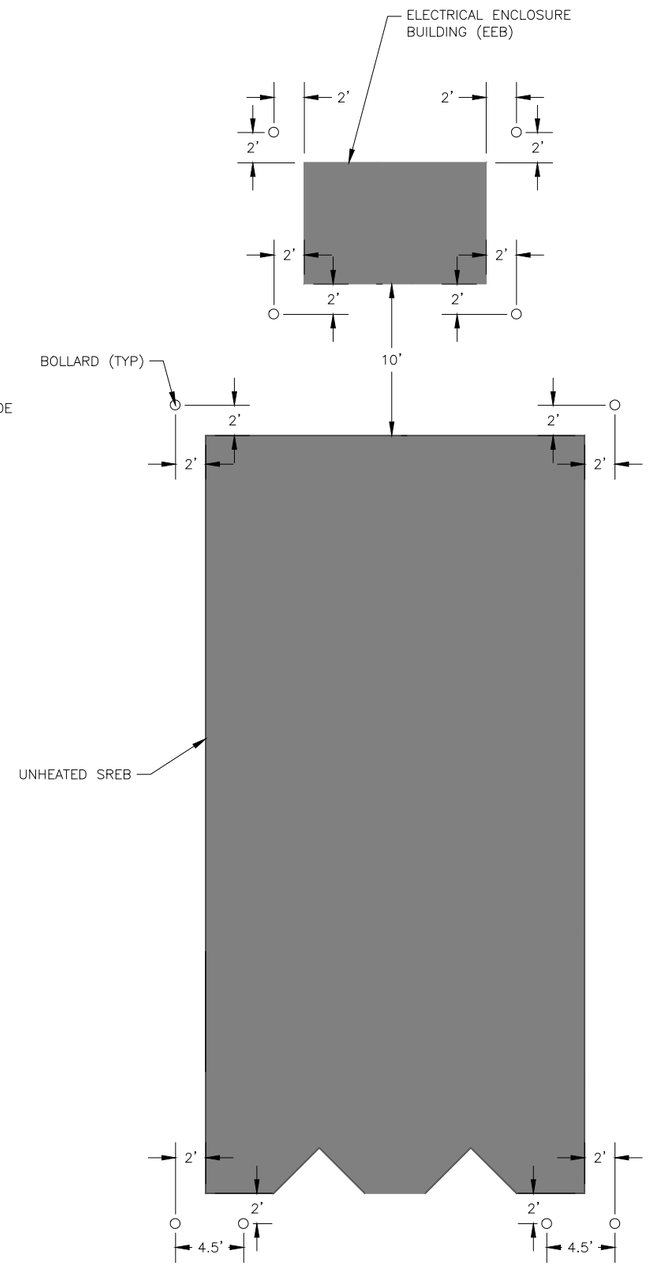

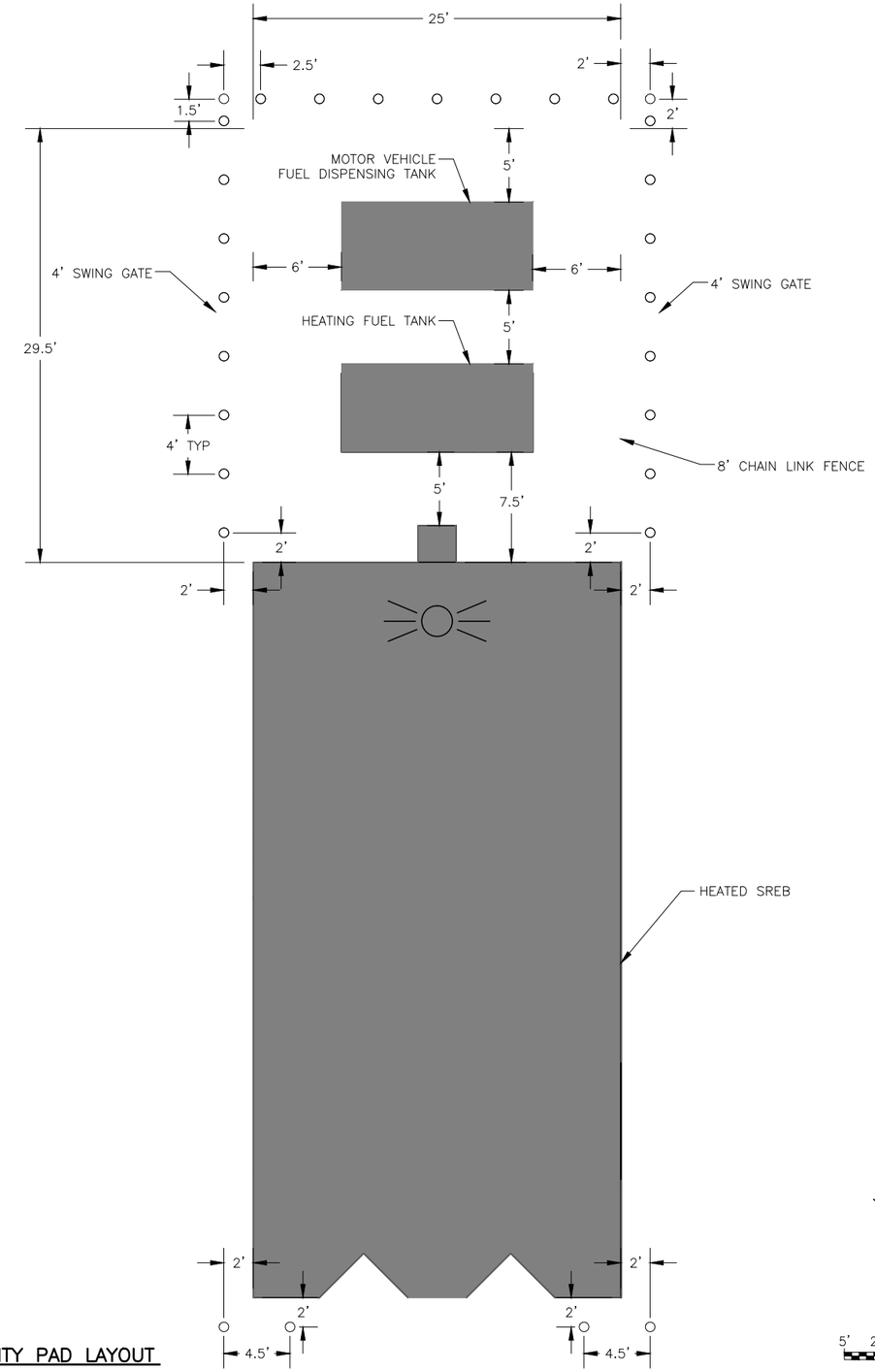

2 / 28 UTILITY PAD LAYOUT

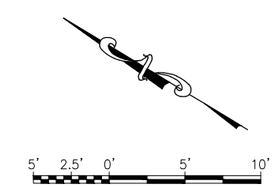

BY	DATE	REVISION

STATE OF ALASKA
DEPARTMENT OF TRANSPORTATION AND PUBLIC FACILITIES
CENTRAL REGION

HOOPER BAY AIRPORT
HOOPER BAY, ALASKA
AIRPORT IMPROVEMENTS
PROJECT No. 57419
AIP No. 3-02-0126-006-2014
BOLLARD LAYOUT & DETAILS

DATE: 1/30/2015
SHEET: 28 OF 28
AS-BUILT SHEET:

Designed By:	BT
Drawn By:	RJB
Checked By:	MHH
Date Revised:	1/30/2015, 8:24 AM
Layout Name:	BOLLARD LAYOUT & DETAILS
File Path and Name:	W:\Projects\Hooper Bay\Hooper Bay Airport Improvements 57419\Final Drawings\HPB 57419-DETAILS.dwg

NAVAID CONSTRUCTION RESPONSIBILITIES

SYSTEM PAY ITEM	FAA	CONTRACTOR	PLAN SHEETS	DETAIL SHEETS
VASI RW 14 L–132d	– Provide NOTAMs for outages – Remove system from service and lock out power supply	– Locate and protect existing equipment and underground cables during construction – Test existing underground cables before and after construction as required – Install new junction boxes, cable, and conduit to splice VASI power feeder disturbed by excavation	E2, E3	
VASI RW 32	– Provide NOTAMs for outages – Remove system from service and lock out power supply	– Locate and protect existing equipment and underground cables during construction – Test existing underground cables before and after construction as required	E2, E3	
ODALS RW 32	– Provide NOTAMs for outages – Remove system from service and lock out power supply	– Locate and protect existing equipment and underground cables during construction – Test existing underground cables before and after construction as required	E2, E3	

NOTES:
This list is intended to portray a general summary of the responsibilities of the parties involved and may not include all specific aspects of the work required.

FAA NOTIFICATIONS AND COORDINATION:
FAA shall be notified a minimum of 45 days prior to their required on–site involvement.
Notifications of outages/NOTAMs, on–site involvement requirements, and flight checks shall be provided to:
NAS Planning and Integration POC: Tom Clark, Alaska Lead Planner, 425–203–4735
Technical Operations Project Engineer: Dave Yee, Naviads Systems Engineer, 425–227–2985
Technical Operations Manager: Richard Neff, FAA Bethel Systems Support Center, 907–543–3533

GENERAL ELECTRICAL NOTES:

1. LOCATIONS OF EXISTING EQUIPMENT, CONDUIT, ETC ARE TAKEN FROM ASBUILT DRAWINGS AND LIMITED SURVEY DATA AND SHALL BE FIELD VERIFIED. OBTAIN LOCATES OF EXISTING SYSTEMS AND EXCAVATE WITH CAUTION.
2. REMOVE LIGHTS AND OTHER EQUIPMENT AS INDICATED ON DEMOLITION PLANS. REMOVAL INCLUDES ALL ASSOCIATED CONDUIT, CONDUCTORS, LIGHT BASES, TRANSFORMERS, CONTROLLERS, DRAIN CONDUITS, FOUNDATIONS, AND CONCRETE, UNLESS OTHERWISE INDICATED. ALL REMOVED LIGHTS, TRANSFORMERS, AND WIND CONES SHALL BE OFFERED TO AIRPORT MAINTENANCE. DISPOSAL OF LIGHTING EQUIPMENT DEEMED NON–SALVAGABLE BY AIRPORT MAINTENANCE AND REMOVED CONDUIT, CONDUCTORS, LIGHT BASES, CONCRETE, AND OTHER MATERIAL SHALL BE THE RESPONSIBILITY OF THE CONTRACTOR AND SHALL BE DISPOSED OF AT AN APPROVED SITE OFF OF AIRPORT PROPERTY IN ACCORDANCE WITH FEDERAL AND STATE REGULATIONS. DISPOSAL COSTS SHALL BE SUBSIDIARY TO THE CONTRACT.
3. COORDINATE ALL LIGHTING OUTAGES CAUSED BY DISCONNECTIONS, CIRCUIT CHANGES, OR OTHER WORK WITH THE PROJECT ENGINEER. SCHEDULE INSTALLATION OF CONDUCTORS AND OTHER EQUIPMENT TO MINIMIZE QUANTITY AND DURATION OF OUTAGES.
4. ALL AIRFIELD LIGHTING CONDUCTORS SHALL BE FAA TYPE C.
5. INSTALL A #6 BARE COPPER GROUNDING CONDUCTOR WITH ALL LIGHTING CIRCUIT CONDUCTORS.
6. INSTALL PULL ROPE IN ALL EMPTY CONDUITS.
7. COORDINATE NEW ELECTRIC SERVICE CONNECTIONS AND INSTALLATION WITH UTILITY (AVEC).
8. TEST EXISTING VASI AND ODALS CABLES IN AREAS OF CONSTRUCTION AND CONSTRUCTION TRAFFIC BEFORE AND AFTER CONSTRUCTION IN ACCORDANCE WITH SECTION L–132. TESTING SHALL BE SUBSIDIARY TO L–132 PAY ITEMS.

SHEET NOTES: (X)

1. ROUTE CONDUITS WITHIN EMBANKMENT. CONDUITS SHOWN OFFSET FOR CLARITY.
2. PROTECT ODALS EQUIPMENT AND UNDERGROUND CABLES AND CONDUITS DURING ADJACENT CONSTRUCTION.
3. PROTECT ODALS AND VASI UNDERGROUND CABLES AND CONDUITS SUBJECT TO HEAVY CONSTRUCTION TRAFFIC USING STEEL PLATES OR OTHER APPROVED METHODS TO DISTRIBUTE VEHICLE LOADS.
4. REMOVE EXISTING LIGHTING CONTROLS, REGULATOR, AND ROTATING BEACON, INCLUDING ALL ASSOCIATED CONDUIT AND CONDUCTORS BACK TO SERVING PANEL. SEAL ALL BUILDING PENETRATIONS WEATHERTIGHT. EXISTING ROTATING BEACON AND ASSOCIATED CONTROLS SHALL REMAIN IN PLACE AND OPERATIONAL UNTIL NEW ROTATING BEACON IS INSTALLED ON NEW SREB AND OPERATIONAL. NEW SREB AND ROTATING BEACON WILL BE INSTALLED DURING SECOND SEASON OF CONSTRUCTION.
5. INSTALL NEW JUNCTION BOX TO CAPTURE EXISTING DIRECT BURIED VASI POWER FEEDER. INSTALL NEW CONDUCTORS AND CONDUIT AS INDICATED. SPLICE NEW CONDUCTORS TO EXISTING TO COMPLETE CIRCUIT. EXISTING CONDUCTORS ARE #8 5kV DIRECT BURIED.

ELECTRICAL PLAN LEGEND

- EXISTING LIGHT TO BE REMOVED
- RUNWAY EDGE LIGHT, OMNI–DIRECTIONAL
- RUNWAY THRESHOLD LIGHT, BI–DIRECTIONAL
- TAXIWAY EDGE LIGHT, OMNI–DIRECTIONAL
- GROUND ROD, 3/4"x10' TYPICAL
- HANDHOLE (HH), TYPE I (LIGHT BASE WITH BLANK COVER)
- NEW ELECTRICAL JUNCTION BOX
- NEW COMMUNICATIONS JUNCTION BOX
- EXISTING TRANSFORMER TO REMAIN
- EXISTING TRANSFORMER TO BE REMOVED
- NEW OR RELOCATED TRANSFORMER
- METERBASE
- WIND CONE
- ROTATING BEACON
- EXISTING ODALS FLASHER
- REFERENCE TO SHEET NOTE
- REFERENCE TO REVISION

EQUIPMENT NUMBER, SEE SCHEDULES ON SHEETS E5 AND E7

RX	RUNWAY EDGE LIGHT
TX	TAXIWAY EDGE LIGHT
HHX	HANDHOLE
JBX	JUNCTION BOX

LIGHT COLORS AND DISTRIBUTIONS

B	BLUE
Y	YELLOW/AMBER
G	GREEN
R	RED
W	WHITE
O	OBSCURED/BLANK
BI	BI–DIRECTIONAL
UNI	UNI–DIRECTIONAL
OMNI	OMNI–DIRECTIONAL

– –XXX– – EXISTING UTILITY LINE TO REMAIN, XXX DESIGNATES TYPE

—XXX— EXISTING UTILITY LINE TO BE REMOVED, XXX DESIGNATES TYPE

—XXX— NEW UTILITY LINE, XXX DESIGNATES TYPE
UG = UNDERGROUND E = ELECTRIC
OH = OVERHEAD T = TLEPHONE
C = COMMUNICATIONS

– – – – – EXISTING CONDUIT TO REMAIN

HDPE CONDUIT WITH CONDUCTORS AS INDICATED, 2" UNLESS OTHERWISE INDICATED

RIGID STEEL CONDUIT WITH CONDUCTORS AS INDICATED, 2" UNLESS OTHERWISE INDICATED

– · – · – TEMPORARY JUMPER OR CIRCUIT, SURFACE LAID IN HDPE CONDUIT

—//— SERIES LIGHTING CIRCUIT, TICK MARKS INDICATE NUMBER OF 5KV SERIES CONDUCTORS IN CONDUIT (2 SHOWN), INCLUDE GROUND CONDUCTOR (NOT SHOWN), TICK MARKS NOT SHOWN ON SHORT SEGMENTS OR IN CONGESTED AREAS FOR CLARITY

ELECTRICAL ABBREVIATIONS

AVEC	ALASKA VILLAGE ELECTRIC COOPERATIVE
AWOS	AUTOMATED WEATHER OBSERVING SYSTEM
BC	BARE COPPER
C	CONDUIT
CB	CIRCUIT BREAKER
CF	CUBIC FOOT
DME	DISTANCE MEASURING EQUIPMENT
DOT	DEPARTMENT OF TRANSPORTATION
EMT	ELECTRICAL METALLIC TUBING
EXST	EXISTING
FAA	FEDERAL AVIATION ADMINISTRATION
GRD	GROUND
HDPE	HIGH DENSITY POLYETHYLENE
LFMC	LIQUIDTIGHT FLEXIBLE METALLIC CONDUIT
LFNC	LIQUIDTIGHT FLEXIBLE NONMETALLIC CONDUIT
LHA	LIGHT HOUSING ASSEMBLY
NF	NON–FUSED
ODALS	OMNI–DIRECTIONAL APPROACH LIGHTING SYSTEM
PAPI	PRECISION APPROACH PATH INDICATOR
PE	PHOTOELECTRIC
PVC	POLYVINYL CHLORIDE
RCO	RADIO COMMUNICATIONS OUTLET
REIL	RUNWAY END IDENTIFIER LIGHTS
RMC	RIGID METALLIC CONDUIT (GALVANIZED STEEL)
RVR	RUNWAY VISUAL RANGE
SS	STAINLESS STEEL
TYP	TYPICAL
UON	UNLESS OTHERWISE NOTED
VASI	VISUAL APPROACH SLOPE INDICATOR

STATE OF ALASKA 49TH LUCAS SCHNELLER EE-11399 REGISTERED PROFESSIONAL ENGINEER

PLANS DEVELOPED BY:
STANTEC

BY	DATE	REVISION

STATE OF ALASKA
DEPARTMENT OF TRANSPORTATION AND PUBLIC FACILITIES
CENTRAL REGION

HOOPER BAY AIRPORT
HOOPER BAY, ALASKA
AIRPORT IMPROVEMENTS
PROJECT No. 57419
AIP No. 3-02-0XXX-00X-2015
ELECTRICAL LEGEND AND NOTES

DATE: 1/22/2015
SHEET: E1 OF E10
AS–BUILT SHEET:

Designed By:
Drawn By:
Checked By:
Date Revised: 1/22/2015, 11:51 AM
Layout Name: E1
File Path and Name: U:\204600125\Dwgs\E\Sheets\1257102_E1.dwg

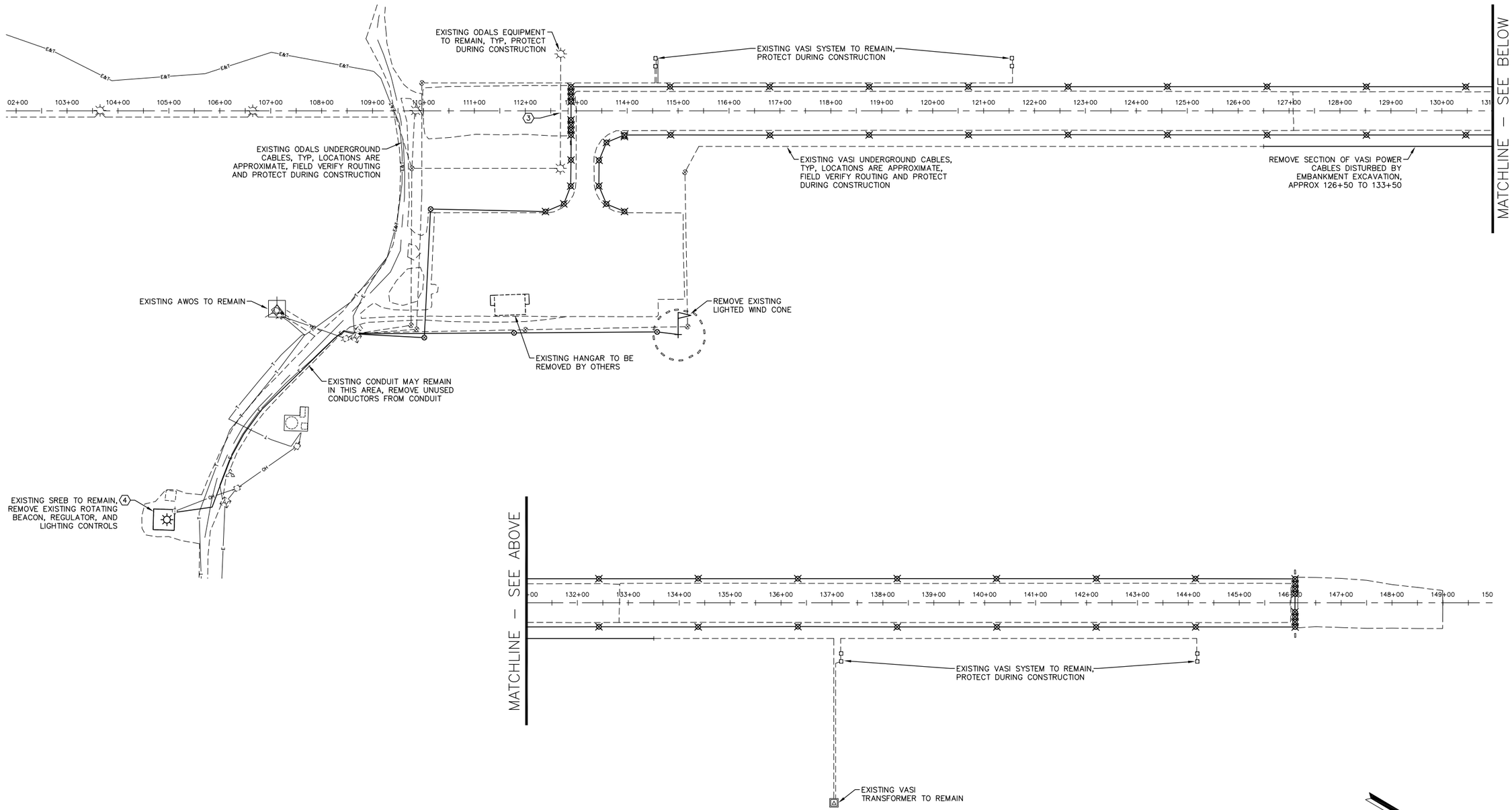

Designed By:	
Drawn By:	
Checked By:	
Date Revised:	1/22/2015, 11:51 AM
Layout Name:	E2
File Path and Name:	U:\204600125\Dwgs\E\Sheets\1257102_E2.dwg

STATE OF ALASKA 49TH LUCAS SCHNELLER EE-11399 REGISTERED PROFESSIONAL ENGINEER

PLANS DEVELOPED BY: STANTEC

BY	DATE	REVISION

STATE OF ALASKA
DEPARTMENT OF TRANSPORTATION AND PUBLIC FACILITIES
CENTRAL REGION

HOOPER BAY AIRPORT
HOOPER BAY, ALASKA
AIRPORT IMPROVEMENTS
PROJECT No. 57419
AIP No. 3-02-0XXX-00X-2015
ELECTRICAL DEMOLITION PLAN

DATE: 1/22/2015
SHEET: E2 OF E10
AS-BUILT SHEET:

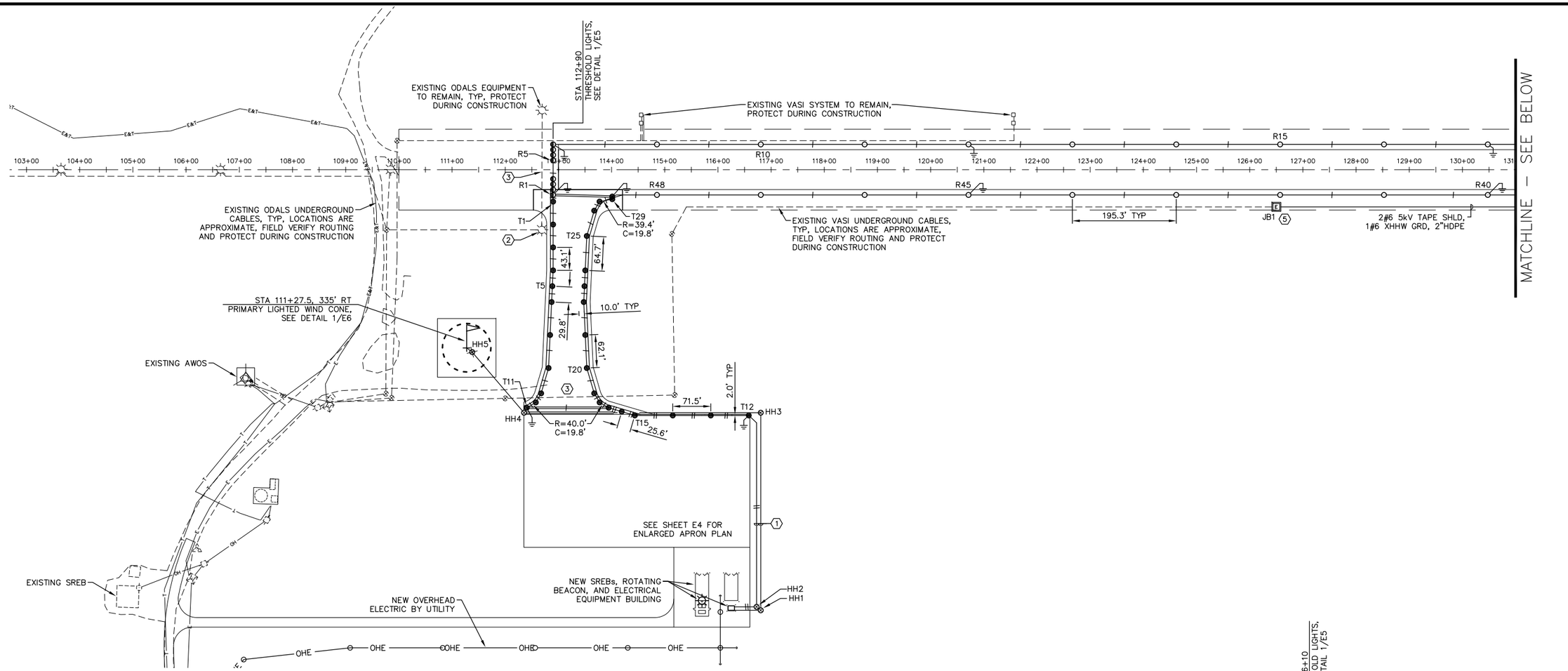

Designed By:	
Drawn By:	
Checked By:	
Date Revised:	1/22/2015, 11:51 AM
Layout Name:	E3
File Path and Name:	U:\204600125\Dwgs\E\Sheets\1257102_E3.dwg

STATE OF ALASKA 49TH LUCAS SCHNELLER EE-11399 REGISTERED PROFESSIONAL ENGINEER

PLANS DEVELOPED BY: STANTEC

BY	DATE	REVISION

STATE OF ALASKA
DEPARTMENT OF TRANSPORTATION AND PUBLIC FACILITIES
CENTRAL REGION

HOOPER BAY AIRPORT
HOOPER BAY, ALASKA
AIRPORT IMPROVEMENTS
PROJECT No. 57419
AIP No. 3-02-0XXX-00X-2015
ELECTRICAL PLAN

DATE: 1/22/2015
SHEET: E3 OF E10
AS-BUILT SHEET:

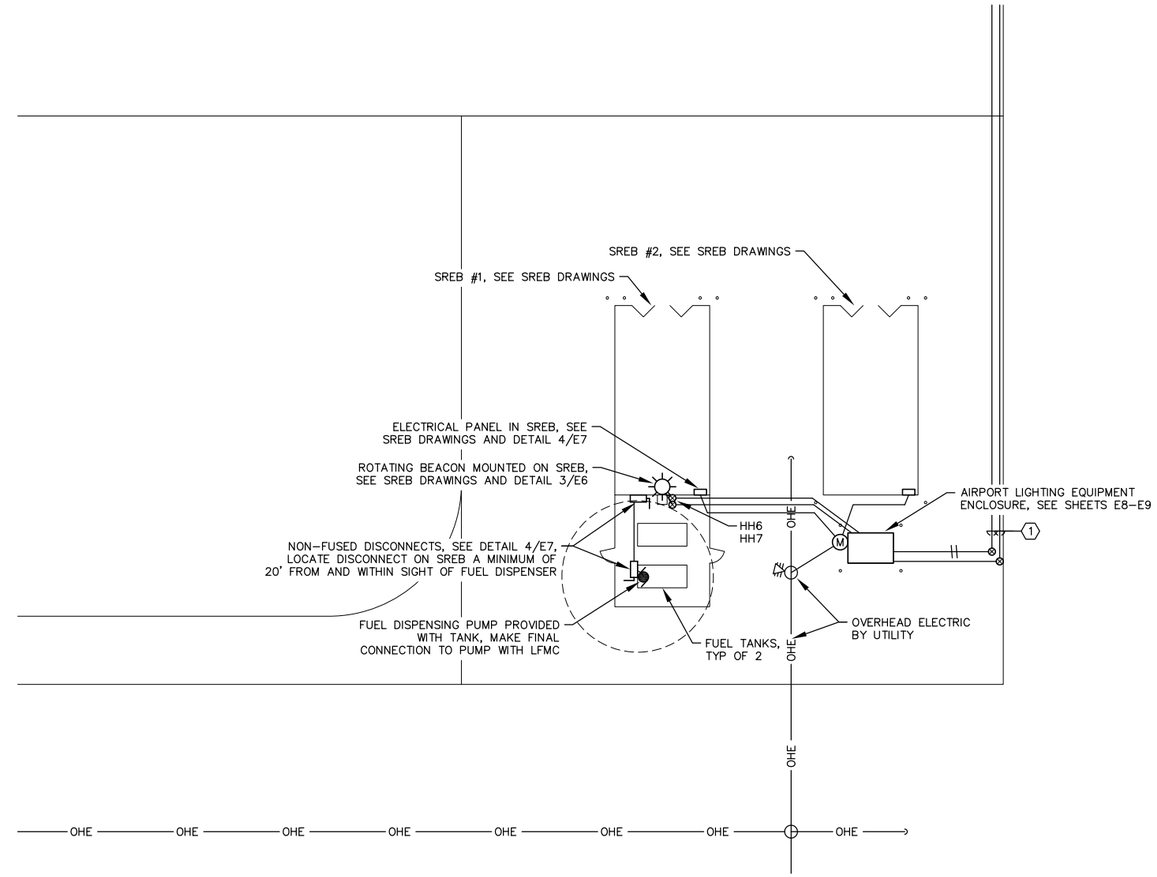

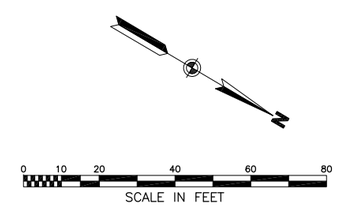

STATE OF ALASKA
49TH
LUCAS SCHNELLER
EE-11399
REGISTERED PROFESSIONAL ENGINEER

PLANS DEVELOPED BY:
STANTEC

BY	DATE	REVISION

STATE OF ALASKA
DEPARTMENT OF TRANSPORTATION AND PUBLIC FACILITIES
CENTRAL REGION

HOOPER BAY AIRPORT
HOOPER BAY, ALASKA
AIRPORT IMPROVEMENTS
PROJECT No. 57419
AIP No. 3-02-0XXX-00X-2015
ENLARGED APRON PLAN

DATE: 1/22/2015
SHEET: E4 OF E10
AS-BUILT SHEET:

Designed By:
Drawn By:
Checked By:
Date Revised: 1/22/2015, 11:51 AM
Layout Name: E4
File Path and Name: U:\204600125\Dwgs\E\Sheets\1257102_E4.dwg

RUNWAY EDGE LIGHT SCHEDULE

NUM	LENS COLOR	TYPE	WATTAGE LAMP	WATTAGE XFMR	STATION	OFFSET	REMARKS
R1	G/R	L-861E	45	30/45	112+90.0	47.5 RT	
R2	G/R	L-861E	45	30/45	112+90.0	37.5 RT	
R3	G/R	L-861E	45	30/45	112+90.0	27.5 RT	
R4	G/R	L-861E	45	30/45	112+90.0	17.5 RT	
R5	G/R	L-861E	45	30/45	112+90.0	17.5 LT	
R6	G/R	L-861E	45	30/45	112+90.0	27.5 LT	
R7	G/R	L-861E	45	30/45	112+90.0	37.5 LT	
R8	G/R	L-861E	45	30/45	112+90.0	47.5 LT	
R9	W	L-861	30	30/45	114+85.3	47.5 LT	
R10	W	L-861	30	30/45	116+80.6	47.5 LT	
R11	W	L-861	30	30/45	118+75.9	47.5 LT	
R12	W	L-861	30	30/45	120+71.2	47.5 LT	
R13	W	L-861	30	30/45	122+66.5	47.5 LT	
R14	W	L-861	30	30/45	124+61.8	47.5 LT	
R15	W	L-861	30	30/45	126+57.1	47.5 LT	
R16	W	L-861	30	30/45	128+52.4	47.5 LT	
R17	W	L-861	30	30/45	130+47.7	47.5 LT	
R18	W	L-861	30	30/45	132+42.9	47.5 LT	
R19	W	L-861	30	30/45	134+38.2	47.5 LT	
R20	W	L-861	30	30/45	136+33.5	47.5 LT	
R21	W	L-861	30	30/45	138+28.8	47.5 LT	
R22	W	L-861	30	30/45	140+24.1	47.5 LT	
R23	W	L-861	30	30/45	142+19.4	47.5 LT	
R24	W	L-861	30	30/45	144+14.7	47.5 LT	
R25	R/G	L-861E	45	30/45	146+10.0	47.5 LT	
R26	R/G	L-861E	45	30/45	146+10.0	37.5 LT	
R27	R/G	L-861E	45	30/45	146+10.0	27.5 LT	
R28	R/G	L-861E	45	30/45	146+10.0	17.5 LT	
R29	R/G	L-861E	45	30/45	146+10.0	17.5 RT	
R30	R/G	L-861E	45	30/45	146+10.0	27.5 RT	
R31	R/G	L-861E	45	30/45	146+10.0	37.5 RT	
R32	R/G	L-861E	45	30/45	146+10.0	47.5 RT	
R33	W	L-861	30	30/45	144+14.7	47.5 RT	
R34	W	L-861	30	30/45	142+19.4	47.5 RT	
R35	W	L-861	30	30/45	140+24.1	47.5 RT	
R36	W	L-861	30	30/45	138+28.8	47.5 RT	
R37	W	L-861	30	30/45	136+33.5	47.5 RT	
R38	W	L-861	30	30/45	134+38.2	47.5 RT	
R39	W	L-861	30	30/45	132+42.9	47.5 RT	
R40	W	L-861	30	30/45	130+47.7	47.5 RT	
R41	W	L-861	30	30/45	128+52.4	47.5 RT	
R42	W	L-861	30	30/45	126+57.1	47.5 RT	
R43	W	L-861	30	30/45	124+61.8	47.5 RT	
R44	W	L-861	30	30/45	122+66.5	47.5 RT	
R45	W	L-861	30	30/45	120+71.2	47.5 RT	
R46	W	L-861	30	30/45	118+75.9	47.5 RT	
R47	W	L-861	30	30/45	116+80.6	47.5 RT	
R48	W	L-861	30	30/45	114+85.3	47.5 RT	

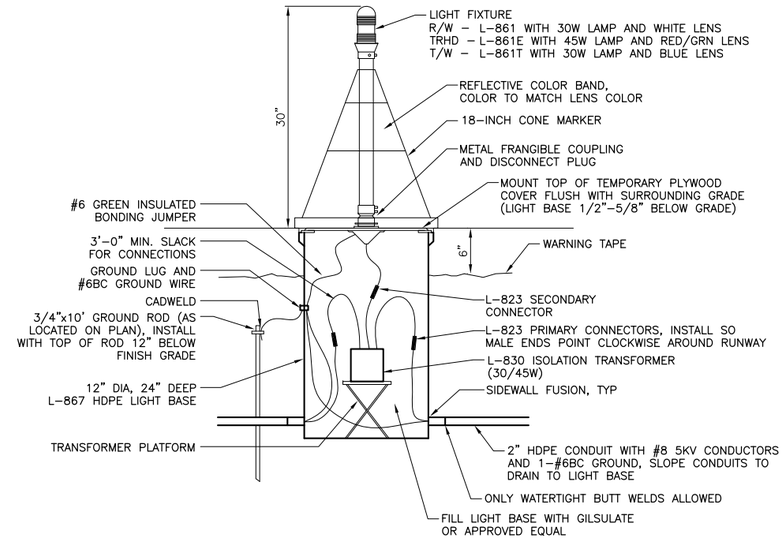

2 / E5 **BASE MOUNTED LIGHT DETAIL**

SCALE: N.T.S.

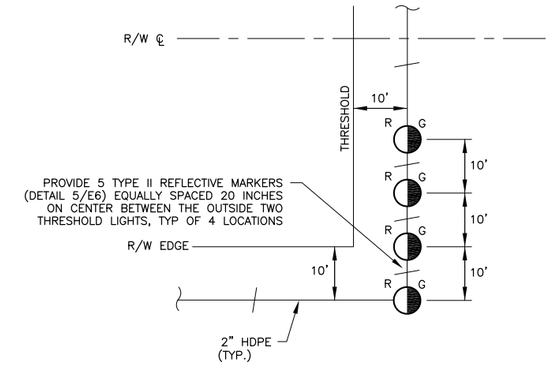

1 / E5 **THRESHOLD LIGHTING DETAIL**

SCALE: N.T.S.

TAXIWAY EDGE LIGHT SCHEDULE

NUM	LENS COLOR	TYPE	WATTAGE LAMP	WATTAGE XFMR	STATION	OFFSET	REMARKS
T1	B	L-861T	30	30/45	112+90.0	60.0 RT	
T2	B	L-861T	30	30/45	112+90.0	103.1 RT	
T3	B	L-861T	30	30/45	112+90.0	146.2 RT	
T4	B	L-861T	30	30/45	112+90.0	189.3 RT	
T5	B	L-861T	30	30/45	112+88.6	219.0 RT	
T6	B	L-861T	30	30/45	112+87.3	248.8 RT	
T7	B	L-861T	30	30/45	112+84.4	310.8 RT	
T8	B	L-861T	30	30/45	112+81.6	372.8 RT	
T9	B	L-861T	30	30/45	112+67.6	420.5 RT	
T10	B	L-861T	30	30/45	112+57.5	437.5 RT	
T11	B	L-861T	30	30/45	112+40.5	447.6 RT	
T12	B	L-861T	30	30/45	116+58.0	462.0 RT	
T13	B	L-861T	30	30/45	115+86.6	462.0 RT	
T14	B	L-861T	30	30/45	115+15.1	462.0 RT	
T15	B	L-861T	30	30/45	114+43.6	462.0 RT	
T16	B	L-861T	30	30/45	114+19.1	454.8 RT	
T17	B	L-861T	30	30/45	113+94.5	447.6 RT	
T18	B	L-861T	30	30/45	113+77.5	437.5 RT	
T19	B	L-861T	30	30/45	113+67.4	420.5 RT	
T20	B	L-861T	30	30/45	113+53.4	372.8 RT	
T21	B	L-861T	30	30/45	113+50.6	310.8 RT	
T22	B	L-861T	30	30/45	113+47.7	248.8 RT	
T23	B	L-861T	30	30/45	113+49.1	219.0 RT	
T24	B	L-861T	30	30/45	113+50.5	189.3 RT	
T25	B	L-861T	30	30/45	113+53.4	124.7 RT	
T26	B	L-861T	30	30/45	113+67.4	77.0 RT	
T27	B	L-861T	30	30/45	113+77.5	60.0 RT	
T28	B	L-861T	30	30/45	114+01.3	50.5 RT	
T29	B	L-861T	30	30/45	114+01.3	55.5 RT	

HANDHOLE SCHEDULE

NUM	TYPE	SIZE	STATION	OFFSET	REMARKS
HH1	I	B	116+80.4	828.3 RT	
HH2	I	B	116+72.6	821.8 RT	
HH3	I	B	116+80.4	456.8 RT	
HH4	I	B	112+35.3	456.8 RT	
HH5	I	B	111+38.0	342.9 RT	
HH6	I	B	115+72.7	810.8 RT	
HH7	I	B	115+72.7	812.6 RT	

NOTE: LOCATIONS ARE APPROXIMATE, FIELD LOCATE HANDHOLES

STATE OF ALASKA 49TH LUCAS SCHNELLER EE-11399 REGISTERED PROFESSIONAL ENGINEER

PLANS DEVELOPED BY: STANTEC

BY	DATE	REVISION

STATE OF ALASKA
DEPARTMENT OF TRANSPORTATION AND PUBLIC FACILITIES
CENTRAL REGION

HOOPER BAY AIRPORT
HOOPER BAY, ALASKA
AIRPORT IMPROVEMENTS
PROJECT No. 57419
AIP No. 3-02-0XXX-00X-2015
DETAILS

DATE: 1/22/2015
SHEET: E5 OF E10
AS-BUILT SHEET:

Designed By:
Drawn By:
Checked By:
Date Revised: 1/22/2015, 11:52 AM
Layout Name: E5
File Path and Name: U:\20460125\Dwgs\E\Sheets\1257102_E5-E10.dwg

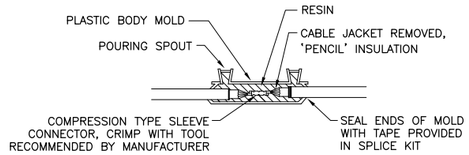

TYPE A

FOR SPLICES IN HOMERUNS AND FOR EXTENSIONS TO EXISTING CABLES ONLY

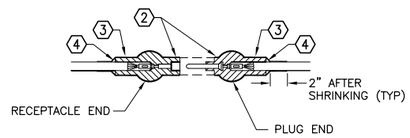

TYPE B

FOR SPLICES FOR USE AT JUNCTION OF HOMERUN WITH LOOP CIRCUIT

NOTES:

1. CABLE SHALL MEET SPECIFICATION L-824. INSIDE DIAMETER OF CONNECTOR SHALL PROPERLY MATCH THE OUTSIDE DIAMETER OF CABLE. CONNECTOR SHALL BE SUPPLIED TO MATCH CABLE PER MANUFACTURER'S INSTRUCTIONS.

2. WRAP WITH A MINIMUM OF ONE LAYER PLASTIC TAPE, ONE-HALF LAPPED, EXTENDING AT LEAST 1.5" ON EACH SIDE OF JOINT. COVER WITH HEAT SHRINK, SEE NOTE 3.

3. HEAT SHRINKABLE TUBING WITH INTERNAL ADHESIVE AT ENDS ONLY. CENTER PORTION AT SEPARABLE CONNECTOR POINT SHALL NOT HAVE INTERNAL ADHESIVE.

4. INSTALL ADDITIONAL ADHESIVE COMPOUND FILLER

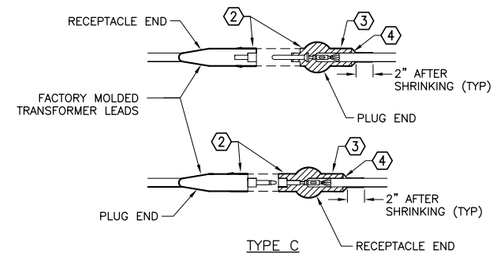

TYPE C

FOR SPLICES AT RUNWAY LIGHTS

2 / E6 TYPICAL SPLICE DETAILS

SCALE: N.T.S.

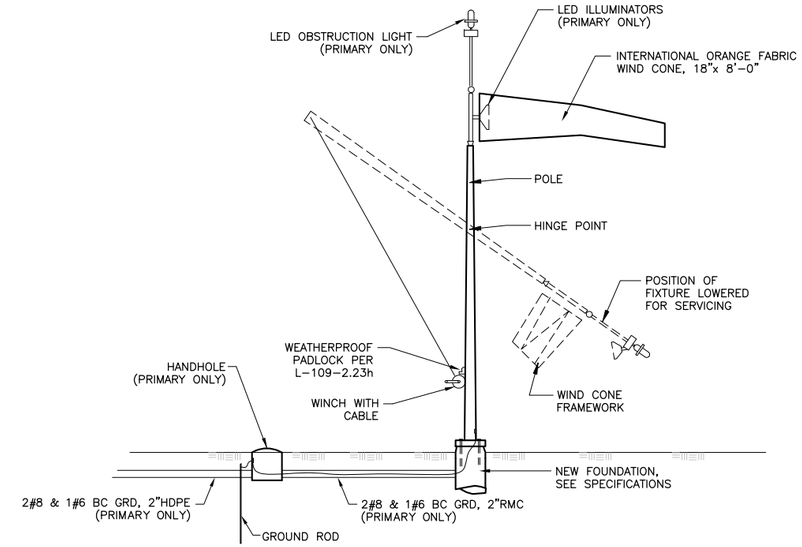

PRIMARY: FAA TYPE L-807, STYLE-IB, SIZE 1, 120V WITH LED LAMPS
SUPPLEMENTAL: FAA TYPE L-807, STYLE-II, SIZE 1, UNLIGHTED

1 / E6 WIND CONE DETAIL

SCALE: N.T.S.

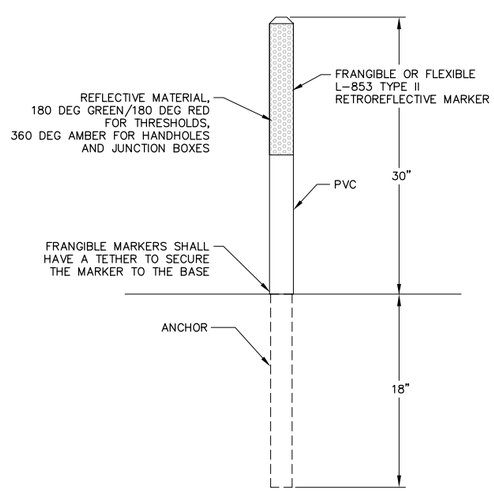

5 / E6 RETROREFLECTIVE MARKER DETAIL

SCALE: N.T.S.

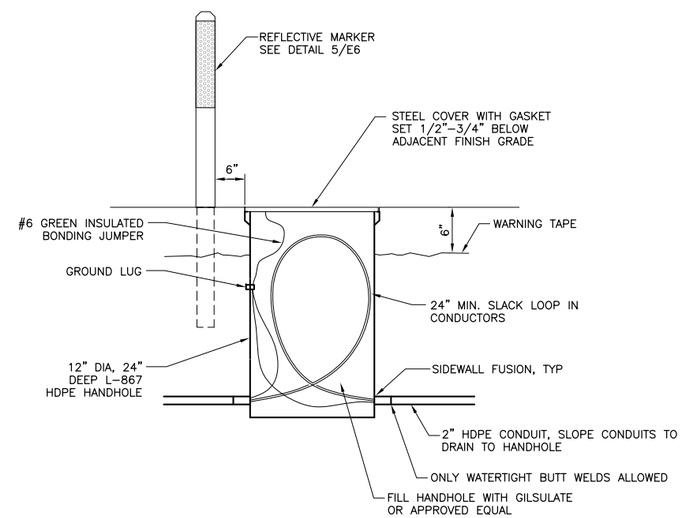

4 / E6 HANDHOLE DETAIL

SCALE: N.T.S.

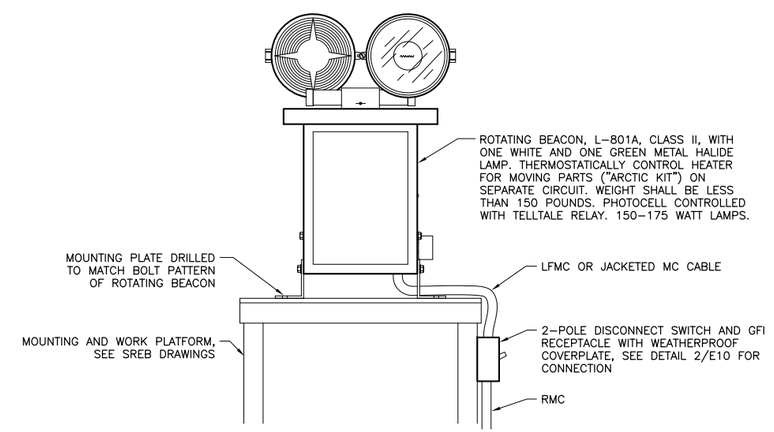

3 / E6 ROTATING BEACON DETAIL

SCALE: N.T.S.

STATE OF ALASKA 49TH LUCAS SCHNELLER EE-11399 REGISTERED PROFESSIONAL ENGINEER

PLANS DEVELOPED BY: STANTEC

BY	DATE	REVISION

STATE OF ALASKA
DEPARTMENT OF TRANSPORTATION AND PUBLIC FACILITIES
CENTRAL REGION

HOOPER BAY AIRPORT
HOOPER BAY, ALASKA
AIRPORT IMPROVEMENTS
PROJECT No. 57419
AIP No. 3-02-0XXX-00X-2015
DETAILS

DATE: 1/22/2015
SHEET: E6 OF E10
AS-BUILT SHEET:

Designed By:
Drawn By:
Checked By:
Date Revised: 1/22/2015, 11:52 AM
Layout Name: E6
File Path and Name: U:\204600125\Dwgs\E\Sheets\1257102_E5-E10.dwg

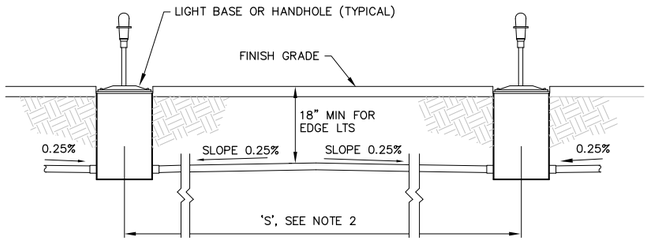

NOTES:

1. CONDUIT SHALL BE INSTALLED WITH CROWN TO DRAIN TO LIGHT BASES AS SHOWN.
2. IF 'S' IS LESS THAN 20', OR IF 0.25% SLOPE CAN BE MAINTAINED IN ONE DIRECTION DUE TO SLOPE OF GRADE, LAY CONDUIT STRAIGHT WITHOUT CROWN BETWEEN BASES/HANDHOLES.

3 / E7 TYPICAL INTERCONNECTION DETAIL

SCALE: N.T.S.

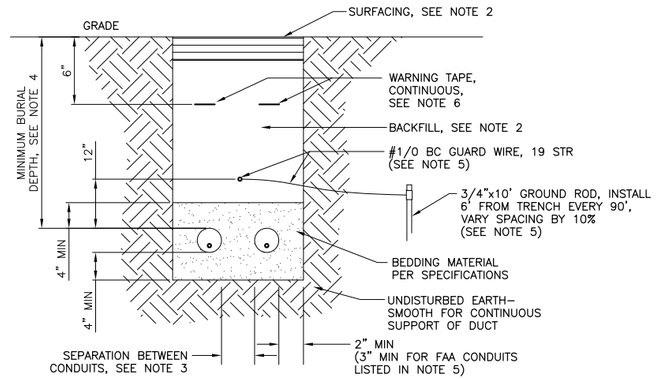

NOTES:

1. WIDTH OF TRENCH AND NUMBER OF CONDUITS PER TRENCH TO BE DETERMINED IN FIELD (2 SHOWN).
2. IN AREAS OF NEW CONSTRUCTION, SEE CIVIL FOR SURFACING AND BACKFILL. IN EXISTING AREAS, MATCH EXISTING SURFACING AND BACKFILL.
3. SEPARATION BETWEEN CONDUITS SHALL BE AS FOLLOWS:
   –CONDUITS OF SAME TYPE (POWER OR SIGNAL) UNDER SAME OWNERSHIP – 2"
   –AIRPORT LIGHTING AND FAA CONDUITS – 12" MIN
   –AIRPORT LIGHTING OR FAA NAVAID CONDUITS AND FAA POWER CONDUITS– 24" MIN
   –FAA NAVIAD CONDUITS, POWER AND CONTROL – 6" MIN (HOR OR VERT)
4. MINIMUM BURIAL DEPTH SHALL BE AS FOLLOWS:
   –AIRPORT LIGHTING CONDUITS – 18"
   –FAA POWER CONDUITS – 30"
   –FAA CONDUITS WHERE UNDER TRAFFIC AREAS (RUNWAYS, TAXIWAYS, APRON, ROADWAYS) – 48"
5. GUARD WIRE AND ASSOCIATED GROUND RODS SHALL BE INSTALLED FOR THE FOLLOWING CONDUITS:
   –FAA POWER CONDUITS (VASI)
6. UNDERGROUND WARNING TAPE SHALL BE 6" WIDE AND DETECTABLE FOR CONDUITS LISTED IN NOTE 5. WARNING TAPE MAY BE THE SAME OR PER L–110 FOR OTHER CONDUITS.

2 / E7 TYPICAL CONDUIT TRENCH DETAIL

SCALE: N.T.S.

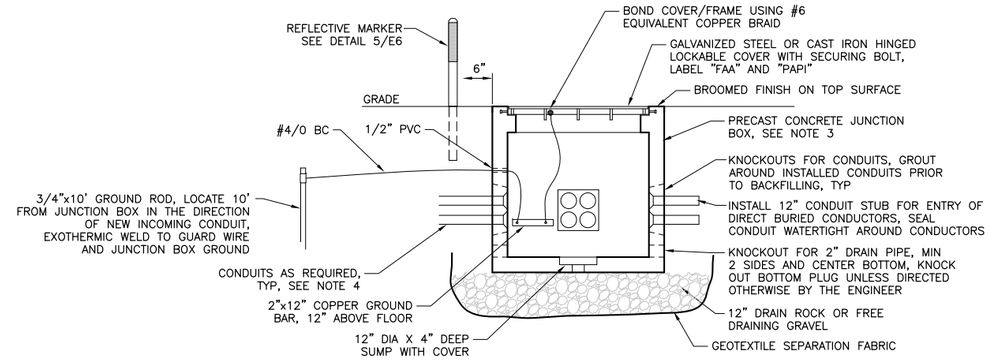

NOTES:

1. JUNCTION BOX, FRAME, AND COVER SHALL BE RATED FOR WHEEL LOADING BASED ON LOCATION. CONCRETE TOP SECTION WITH COVER MAY BE OVERSIZED IF REQUIRED TO MEET LOADING REQUIREMENTS.

   AIRCRAFT AREA (WITHIN RSA) – 100,000 LB. LOAD
   NON–AIRCRAFT AREA – H–20 WHEEL LOADING
2. CAST IRON HINGED COVERS SHALL BE PROVIDED WITH SPRING ASSIST MECHANISM.
3. JUNCTION BOXES SHALL HAVE INSIDE DIMENSIONS AS INDICATED. JUNCTION BOX FLOOR SHALL BE 36" MIN BELOW GRADE OR AS REQUIRED TO ALLOW CONDUITS TO SLOPE AND DRAIN TO JUNCTION BOX.

JUNCTION BOX	COVER SIZE
4'x4'	36"x36" MIN

4. METALLIC CONDUIT SHALL EXTEND 2" INTO JUNCTION BOX AND TERMINATE WITH AN INSULATED GROUNDING BUSHING BONDED TO THE GROUND BUS WITH #6 BC. NON–METALLIC CONDUIT SHALL TERMINATE AT TERMINATION FITTING CAST INTO THE JUNCTION BOX WALL OR SHALL EXTEND 2" INTO JUNCTION BOX AND HAVE THE ENDS REAMED TO PREVENT CONDUCTOR INSULATION DAMAGE.
5. ALL CONNECTIONS TO THE JUNCTION BOX GROUND SHALL BE BY EXOTHERMIC WELDS.

1 / E7 JUNCTION BOX DETAIL

SCALE: N.T.S.

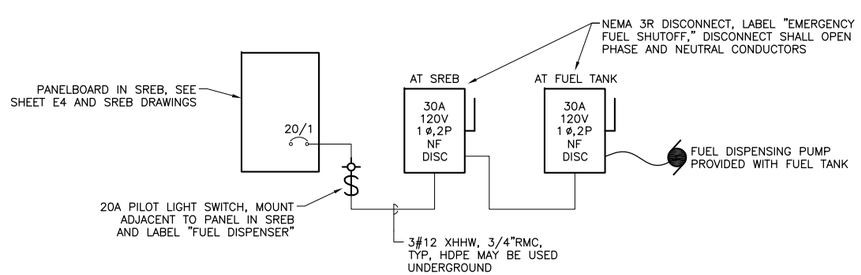

4 / E7 FUEL DISPENSER WIRING DIAGRAM

SCALE: N.T.S.

JUNCTION BOX SCHEDULE

NUM	LOAD RATING	SIZE	SYSTEM	STATION	OFFSET	REMARKS
JB1	100K	4'x4'	FAA POWER	126+50.0	70.0 RT	PAID FOR UNDER L–132d
JB2	100K	4'x4'	FAA POWER	133+50.0	70.0 RT	PAID FOR UNDER L–132d

NOTE: LOCATIONS ARE APPROXIMATE, FIELD LOCATE JUNCTION BOXES BASED ON INSTALLED EQUIPMENT AND FIELD CONDITIONS

STATE OF ALASKA 49TH LUCAS SCHNELLER EE-11399 REGISTERED PROFESSIONAL ENGINEER

PLANS DEVELOPED BY: STANTEC

BY	DATE	REVISION

STATE OF ALASKA
DEPARTMENT OF TRANSPORTATION AND PUBLIC FACILITIES
CENTRAL REGION

HOOPER BAY AIRPORT
HOOPER BAY, ALASKA
AIRPORT IMPROVEMENTS
PROJECT No. 57419
AIP No. 3-02-0XXX-00X-2015
DETAILS

DATE: 1/22/2015
SHEET: E7 OF E10
AS-BUILT SHEET:

Date Revised: 1/22/2015, 11:52 AM
Layout Name: E7
File Path and Name: U:\204600125\Dwgs\E\Sheets\1257102_E5-E10.dwg
Designed By:
Drawn By:
Checked By:

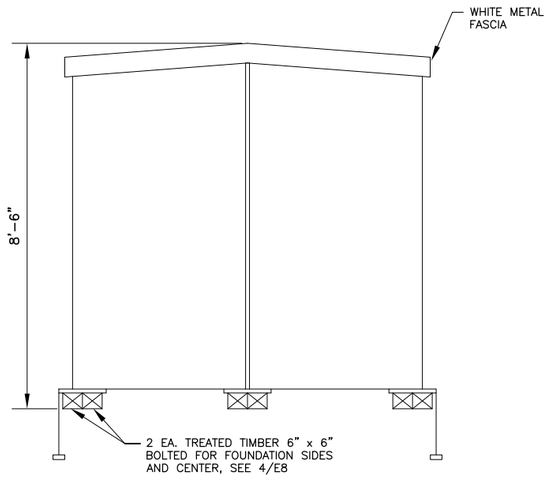

3 / E8 TYPICAL ENCLOSURE END ELEVATION

SCALE: N.T.S.

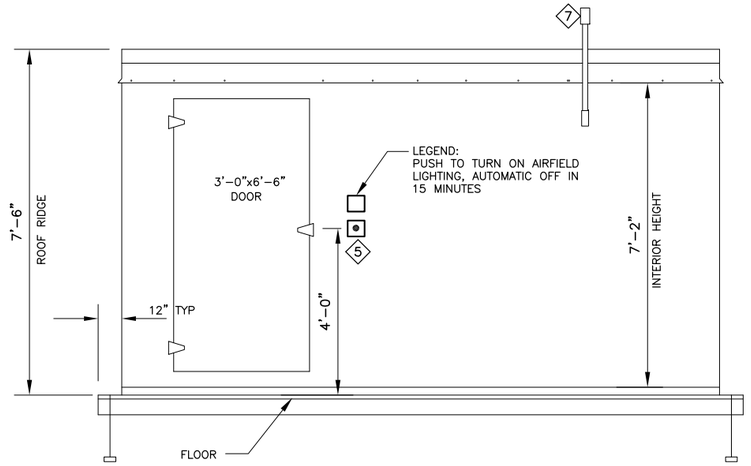

2 / E8 TYPICAL ENCLOSURE SIDE ELEVATION

SCALE: N.T.S.

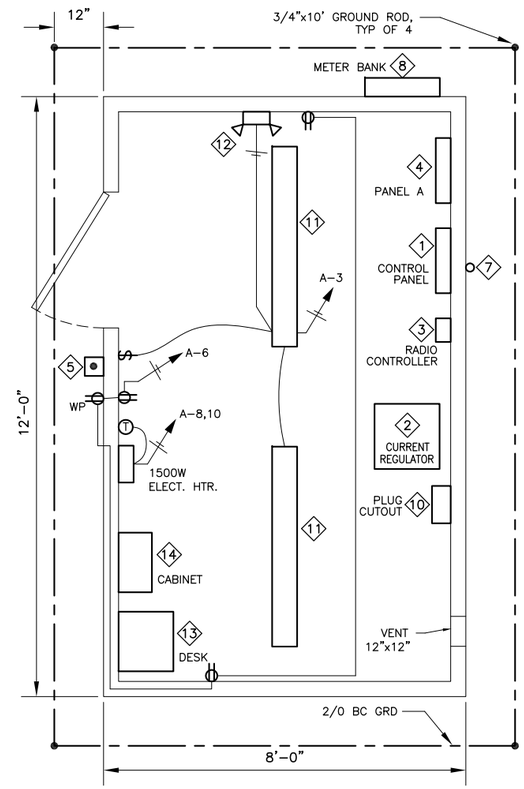

1 / E8 ELECTRICAL EQUIPMENT ENCLOSURE PLAN

SCALE: N.T.S.

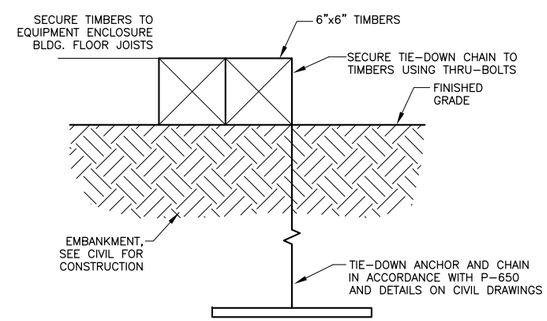

4 / E8 TIE-DOWN AND FOUNDATION DETAIL

SCALE: N.T.S.

ENCLOSURE PLAN LEGEND

- DUPLEX RECEPTACLE
- SINGLE POLE SWITCH
- CEILING MOUNTED LIGHT FIXTURE
- EMERGENCY LIGHT WITH BATTERY BACKUP
- THERMOSTAT
- SEE SHEET E9 FOR EQUIPMENT LIST

STATE OF ALASKA 49TH LUCAS SCHNELLER EE-11399 REGISTERED PROFESSIONAL ENGINEER

PLANS DEVELOPED BY: STANTEC

BY	DATE	REVISION

STATE OF ALASKA
DEPARTMENT OF TRANSPORTATION AND PUBLIC FACILITIES
CENTRAL REGION

HOOPER BAY AIRPORT
HOOPER BAY, ALASKA
AIRPORT IMPROVEMENTS
PROJECT No. 57419
AIP No. 3-02-0XXX-00X-2015
DETAILS

DATE: 1/22/2015
SHEET: E8 OF E10
AS-BUILT SHEET:

Designed By:
Drawn By:
Checked By:
Date Revised: 1/22/2015, 11:52 AM
Layout Name: E8
File Path and Name: U:\204600125\Dwgs\E\Sheets\1257102_E5-E10.dwg

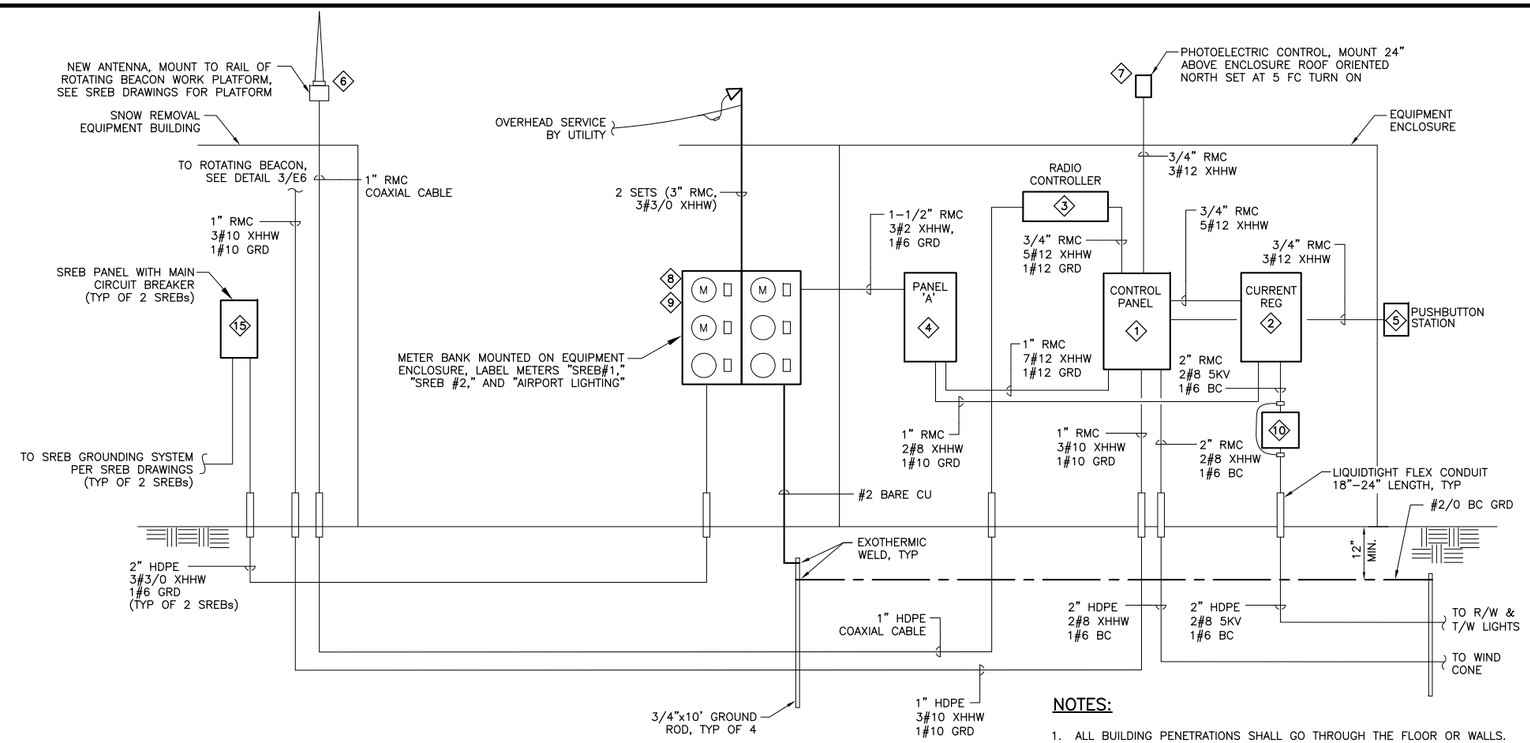

NOTES:

1. ALL BUILDING PENETRATIONS SHALL GO THROUGH THE FLOOR OR WALLS.
2. NO PENETRATIONS SHALL BE MADE THROUGH THE ROOF.
3. ALL PENETRATIONS SHALL BE SEALED WITH SILICONE SEALANT.
4. IMC MAY BE USED FOR CONDUIT SECTIONS LOCATED ENTIRELY INTERIOR TO THE EQUIPMENT ENCLOSURE.

1/E9 ONE-LINE DIAGRAM

SCALE: N.T.S.

PANEL 'A'

CKT	LOAD	BRANCH BKR	BRANCH VA	CONN KVA A	CONN KVA B	BRANCH VA	BRANCH BKR	LOAD	CKT
1	LIGHTING CONTROL PANEL	20/1	600	1.1		470	20/2	ROTATING BEACON	2
3	ENCLOSURE LIGHTS	20/1	139		0.5	400		BEACON STRIP HEATER	4
5	RECEPTACLES - SEE NOTE 1	20/1	720	4.2		3480	40/2	5KW REGULATOR	6
7	WIND CONE	20/1	32		3.5	3480			8
9				0.8		750	20/2	ELECTRIC HEATER	10
11					0.8	750			12
13				0.0					14
15					0.0				16
17				0.0					18
19					0.0				20
21				0.0					22
23					0.0				24
25				0.0					26
27					0.0				28
29				0.0					30
	CONNECTED LOAD	**10.8** KVA		6.0	4.8				
		52 AMPS		50	40				
	NEC DEMAND	**12.9** KVA							
		62 AMPS							

PANEL NOTES
1. GFI CIRCUIT BREAKER

PANEL SPECIFICATIONS
MAINS RATING AMPS - 100
MAIN CIRCUIT BREAKER AMPERES - MLO
CAPACITY ONE-POLE CIRCUITS - 30
SYSTEM VOLTAGE - 208/120
PHASE, NO. OF WIRES - 1 PH, 3 W
AIC RATING - 10,000
MOUNTING - SURFACE

EQUIPMENT LIST - ◇X

1. LIGHTING CONTROL PANEL, SEE SPECS.
2. FERRORESONANT CONSTANT CURRENT REGULATOR, 5KW, 240V INPUT, 6.6A OUTPUT, 3-STEP.
3. RADIO CONTROLLER, CROUSE-HINDS MODEL #RC-IT5A OR APPROVED EQUAL, FREQUENCY-122.9MHZ, RELAYS SHALL BE SET TO OPERATE CUMULATIVELY.
4. CIRCUIT BREAKER PANELBOARD, MLO, SQ.D #NQOD30L225CU OR EQUAL.
5. PUSH BUTTON STATION, GENERAL ELECTRIC #CR2943AJ301B OR APPROVED EQUAL.
6. RADIO CONTROL ANTENNA, ANTENNA SPECIALIST MODEL AV-1 OR EQUAL.
7. PHOTOELECTRIC CONTROL, TORK #2101 OR EQUAL.
8. 6-METER, METER/MAIN BANK WITH 200A METER SOCKETS, PROVIDE (4) 100A MAIN BREAKERS FOR AIRPORT LIGHTING, AND FUTURE, AND (2) 200A MAIN BREAKERS FOR SREBs, LABEL METERS/MAIN BREAKERS, COORDINATE REQUIREMENTS WITH UTILITY COMPANY.
9. KILOWATT HOUR METERS PROVIDED BY THE UTILITY COMPANY FOR AIRPORT LIGHTING AND SREBs. INSTALL BLANK COVERS FOR FUTURE.
10. PLUG CUTOUT, 5KV, ADB S-1 IN 12"x16"x8" NEMA 1 BOX WITH HINGED COVER, OR APPROVED EQUAL.
11. LITHONIA #FEM4 LED, 4000LM, RIBBED FROSTED LENS, 120V OR EQUAL.
12. EMERGENCY LIGHT, LITHONIA #ELT16-N OR EQUAL.
13. 24"X23"X12" METAL WALL DESK, McMASTER-CARR #4894T26 OR EQUAL. MOUNT DESK TOP AT 36" AFF.
14. 30"X12"X26" LOCKABLE METAL WALL CABINET, McMASTER-CARR #14725T55 OR EQUAL.
15. 200A PANEL WITH MAIN CIRCUIT BREAKER PROVIDED AND INSTALLED WITH SREB. SEE SREB DRAWINGS.

STATE OF ALASKA 49TH LUCAS SCHNELLER EE-11399 REGISTERED PROFESSIONAL ENGINEER

PLANS DEVELOPED BY: STANTEC

BY	DATE	REVISION

STATE OF ALASKA
DEPARTMENT OF TRANSPORTATION AND PUBLIC FACILITIES
CENTRAL REGION

HOOPER BAY AIRPORT
HOOPER BAY, ALASKA
AIRPORT IMPROVEMENTS
PROJECT No. 57419
AIP No. 3-02-0XXX-00X-2015
DETAILS

DATE: 1/22/2015
SHEET: E9 OF E10
AS-BUILT SHEET:

Designed By:
Drawn By:
Checked By:
Date Revised: 1/22/2015, 11:52 AM
Layout Name: E9
File Path and Name: U:\204600125\Dwgs\E\Sheets\1257102_E5-E10.dwg

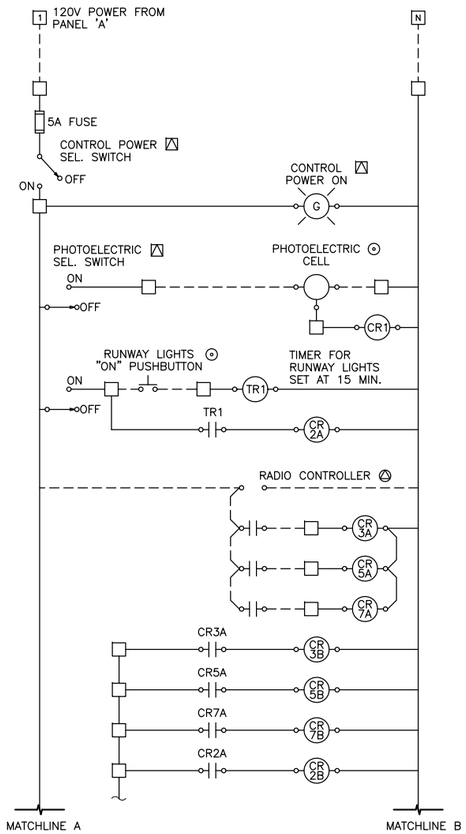

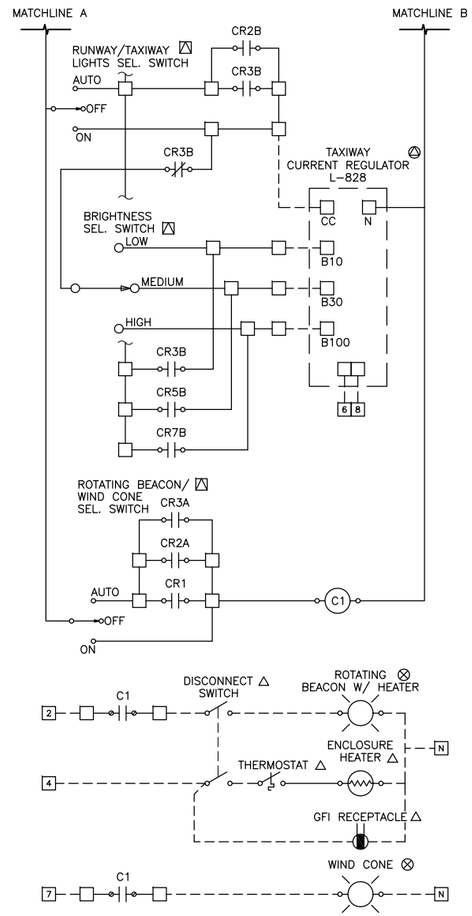

CONTROL DIAGRAM LEGEND

- DEVICE LOCATED ON FRONT OF CONTROL PANEL
- TERMINAL BLOCK LOCATED IN CONTROL PANEL
- DEVICE LOCATED ON ENCLOSURE EXTERIOR
- DEVICE LOCATED INSIDE EQUIPMENT ENCLOSURE
- FIELD WIRING
- CIRCUIT BREAKER IN PANEL 'A'
- DEVICE LOCATED ON AIRFIELD
- DEVICE LOCATED IN OR NEAR ROTATING BEACON ENCLOSURE
- NORMALLY OPEN CONTACT X INDICATES ASSOCIATED COIL
- NORMALLY CLOSED CONTACT X INDICATES ASSOCIATED COIL
- RELAY OR CONTACTOR COIL
- TIMER COIL

2 / E10 CONTROL PANEL LADDER DIAGRAM

SCALE: N.T.S.

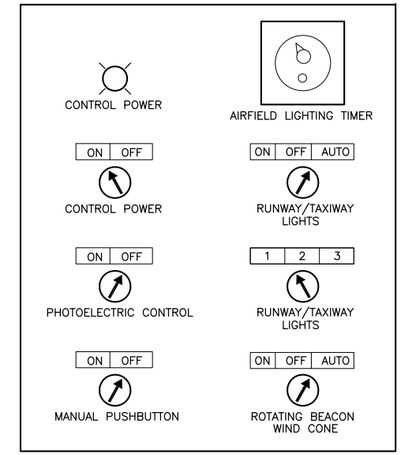

CONTROL SEQUENCE DESCRIPTION

RUNWAY & TAXIWAY LIGHTS

ON – LIGHTS ON AT BRIGHTNESS SET BY MANUAL BRIGHTNESS SWITCH

OFF – LIGHTS OFF

AUTO – RADIO CONTROLLER ENABLED
3 CLICKS OF MIC TURNS ON RW/TW LIGHTS AT STEP 1,
2 ADDITIONAL CLICKS OF MIC TURNS RW/TW LIGHTS TO STEP 2,
2 ADDITIONAL CLICKS OF MIC TURNS RW/TW LIGHTS TO STEP 3,
LIGHTS REMAIN ON FOR 15 MINUTES AFTER LAST CLICK

EXTERIOR PUSHBUTTON TURNS LIGHTS ON FOR 15 MINUTES AT BRIGHTNESS SET BY MANUAL BRIGHTNESS SWITCH

ROTATING BEACON AND WIND CONE

ON – BEACON AND WIND CONE ON

OFF – BEACOND AND WIND CONE OFF

AUTO – PHOTOELECTRIC CONTROL AND RADIO CONTROLLER ENABLED
3 CLICKS OF MIC TURNS BEACON WIND CONE ON,
BEACON AND WIND CONE REMAIN ON FOR 15 MINUTES AFTER LAST CLICK

EXTERIOR PUSHBUTTON TURNS ROTATING BEACON AND WIND CONE ON FOR 15 MINUTES

EXTERIOR PUSHBUTTON

ON – PUSHBUTTON ENABLED
MOMENTARY CONTACT TURNS ON AIRPORT LIGHTING EQUIPMENT FOR 15 MINUTES (ADJUSTABLE BY TIMER)

OFF – PUSHBUTTON DISABLED

BRIGHTNESS LEVELS

RUNWAY/TAXIWAY

STEP 1 – 10%
STEP 2 – 30%
STEP 3 – 100%

1 / E10 CONTROL PANEL DETAIL

SCALE: N.T.S.

STATE OF ALASKA 49TH LUCAS SCHNELLER EE-11399 REGISTERED PROFESSIONAL ENGINEER

PLANS DEVELOPED BY: STANTEC

BY	DATE	REVISION

STATE OF ALASKA
DEPARTMENT OF TRANSPORTATION AND PUBLIC FACILITIES
CENTRAL REGION

HOOPER BAY AIRPORT
HOOPER BAY, ALASKA
AIRPORT IMPROVEMENTS
PROJECT No. 57419
AIP No. 3-02-0XXX-00X-2015
DETAILS

DATE: 1/22/2015
SHEET: E10 OF E10
AS-BUILT SHEET:

Date Revised: 1/22/2015, 11:52 AM
Layout Name: E10
File Path and Name: U:\204600125\Dwgs\E\Sheets\1257102_E5-E10.dwg
Designed By:
Drawn By:
Checked By: