APPENDIX I - GENERAL AIRPORT LAYOUT DETAIL

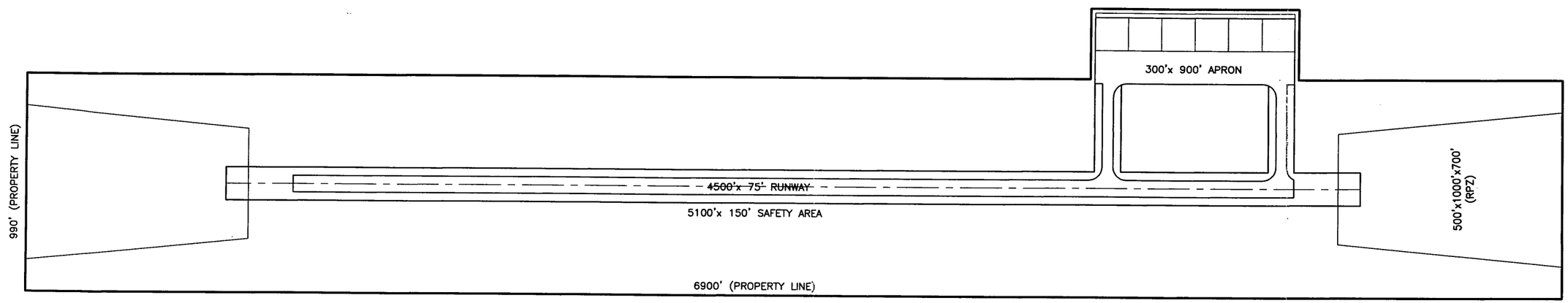
300'x 900' APRON
4500'x 75' RUNWAY
5100'x 150' SAFETY AREA
990' (PROPERTY LINE)
500'x1000'x700'
(RPZ)
6900' (PROPERTY LINE)

APPENDIX II - AERIAL PHOTOGRAPHY

HOOPER BAY
Approximate Scale: 1" = 470'
Date Flown: 5-26-97

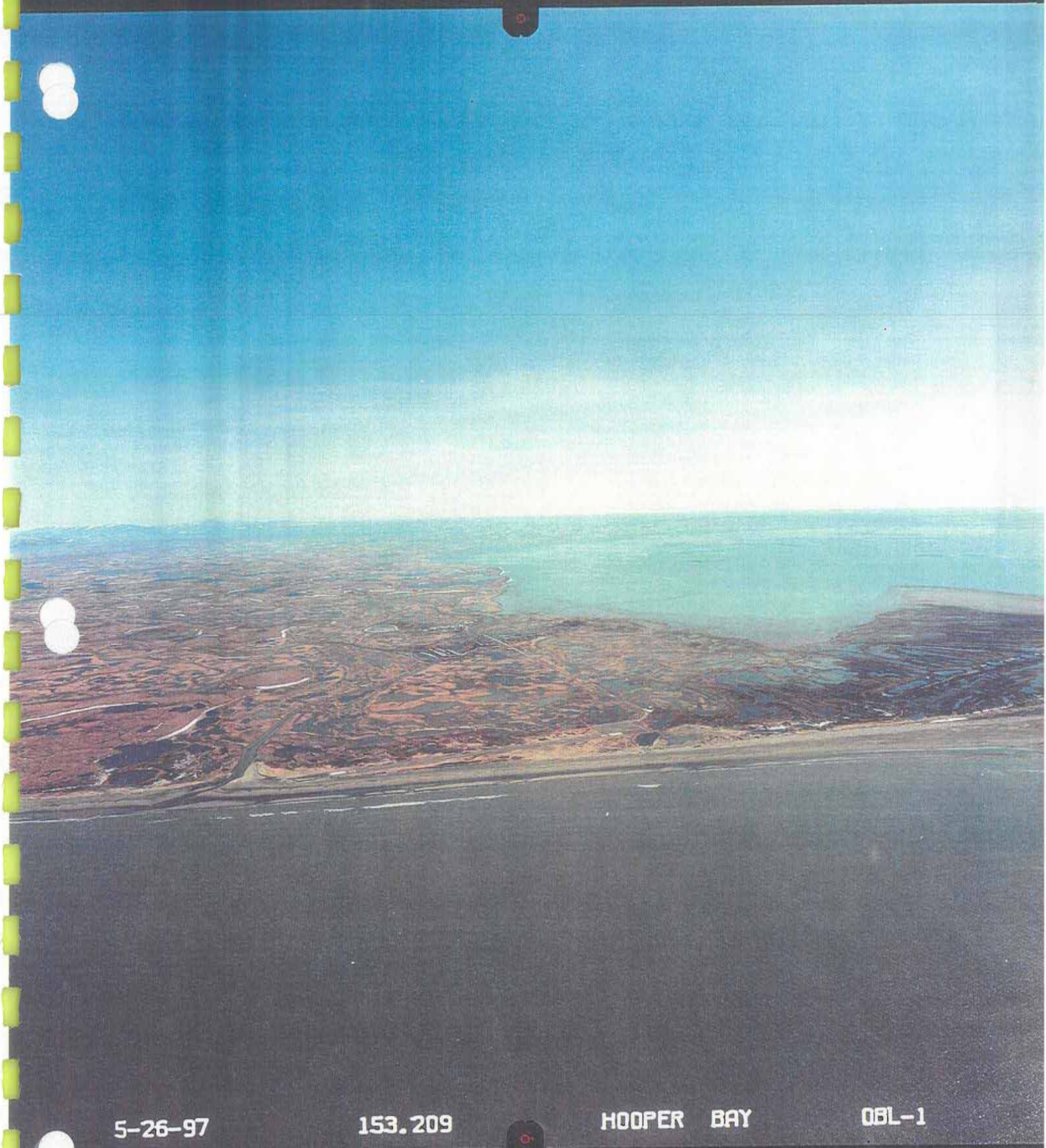
5-26-97
153.209
HOOPER BAY
OBL-1

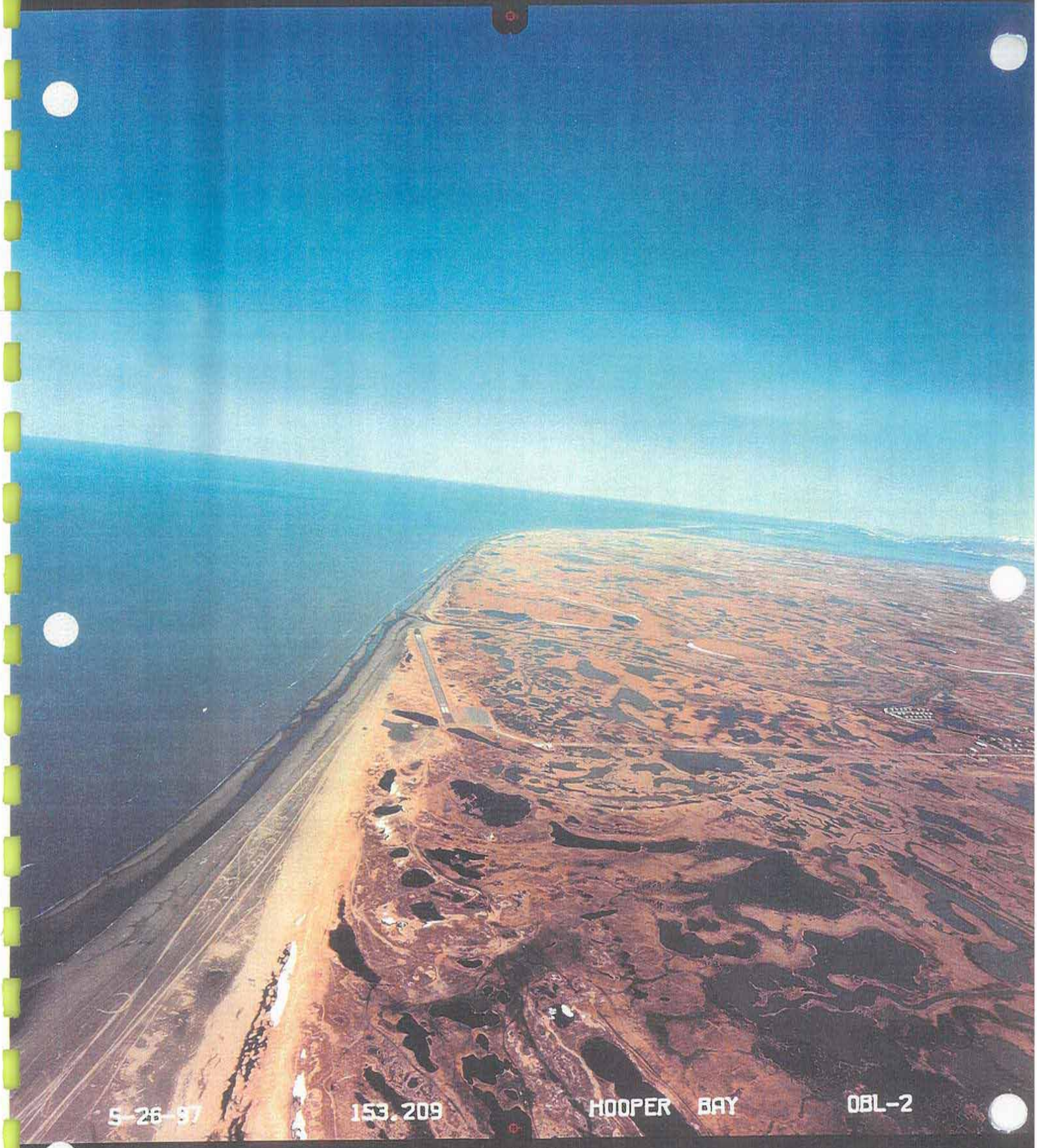
5-26-97
153.209
HOOPER BAY
OBL-2

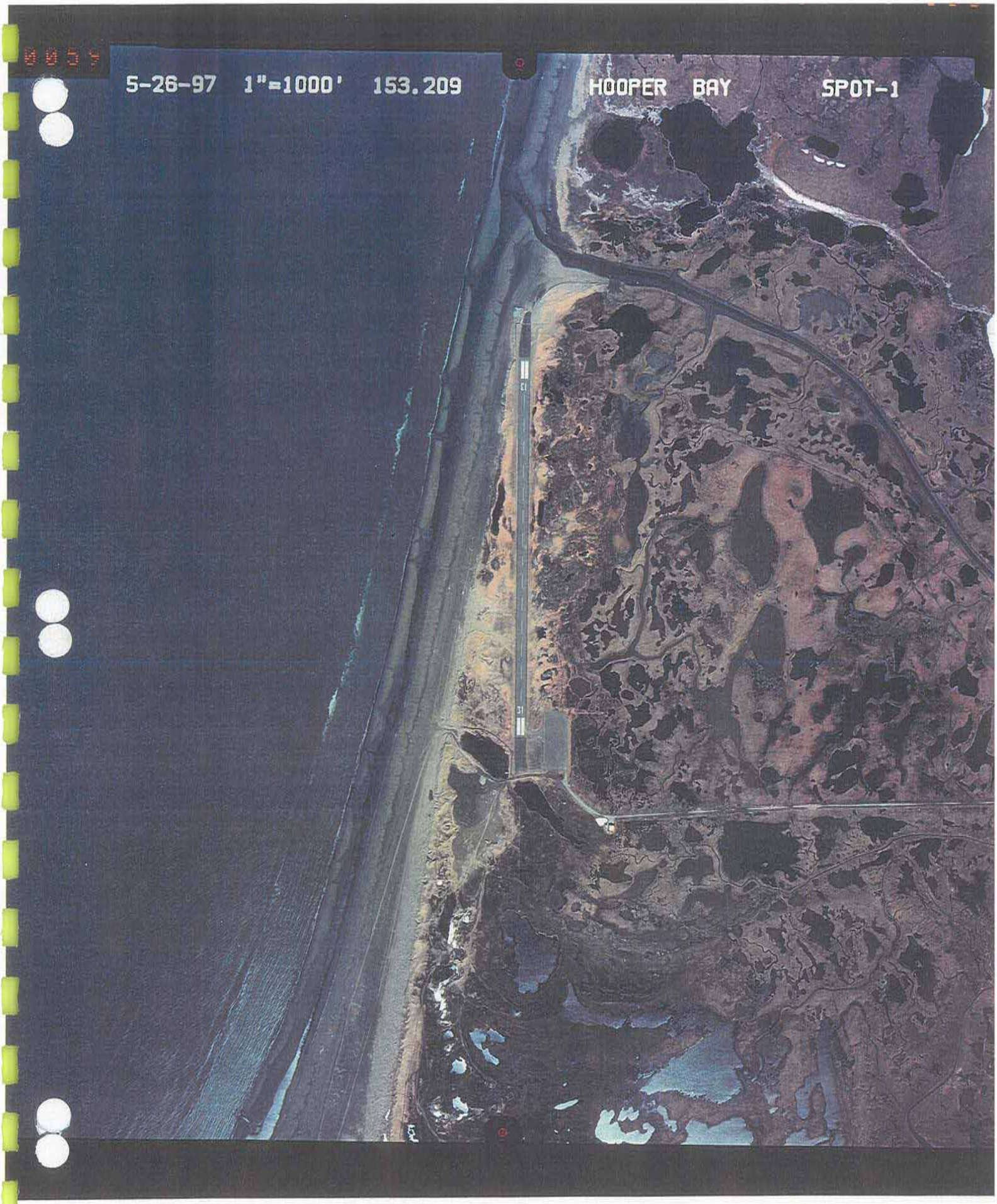
0059
5-26-97 1"=1000' 153.209
HOOPER BAY
SPOT-1

APPENDIX III - ALTERNATIVE SITE MAP

Approximate Lats & Longs for R/W CL point

① 61-34-30 N
166-06-40 W

② 61-34-35 N
166-04-55 W

③ 61-33-45 N
166-03-00 W

④ 61-33-45 N
166-00-10 W

⑤ 61-34-00 N
165-56'10 W

APPENDIX IV - TYPICAL SECTIONS

RUNWAY

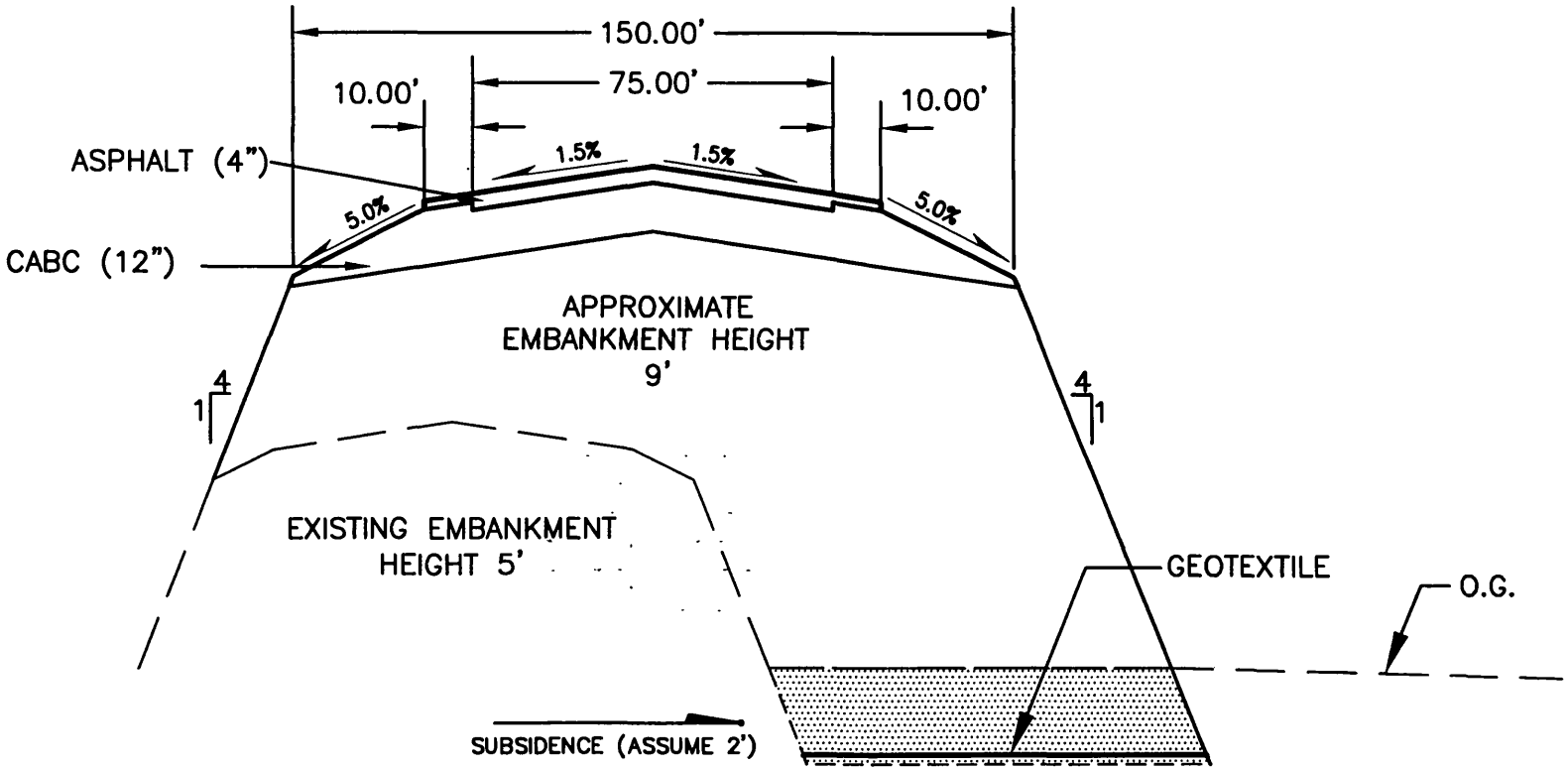

STATE OF ALASKA **DEPARTMENT OF TRANSPORTATION AND PUBLIC FACILITIES** CENTRAL REGION AVIATION DESIGN	**HOOPER BAY AIRPORT** AIRPORT RECONSTRUCTION	DESIGNED APPROVED	DATE 4/27/2004 SHEET 1 OF 5

TAXIWAY

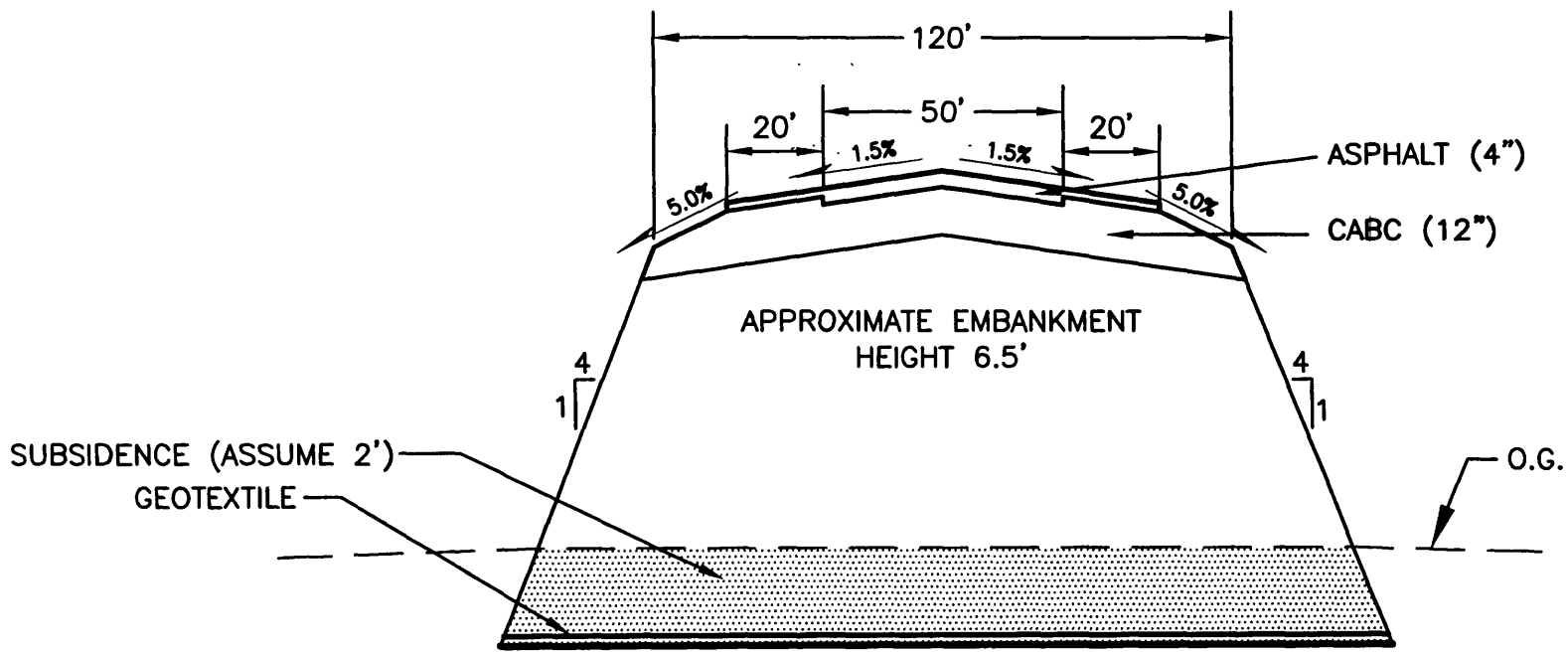

STATE OF ALASKA **DEPARTMENT OF TRANSPORTATION AND PUBLIC FACILITIES** CENTRAL REGION AVIATION DESIGN	**HOOPER BAY AIRPORT** AIRPORT RECONSTRUCTION	DESIGNED APPROVED	DATE 4/27/2004 SHEET 2 OF 5

APRON

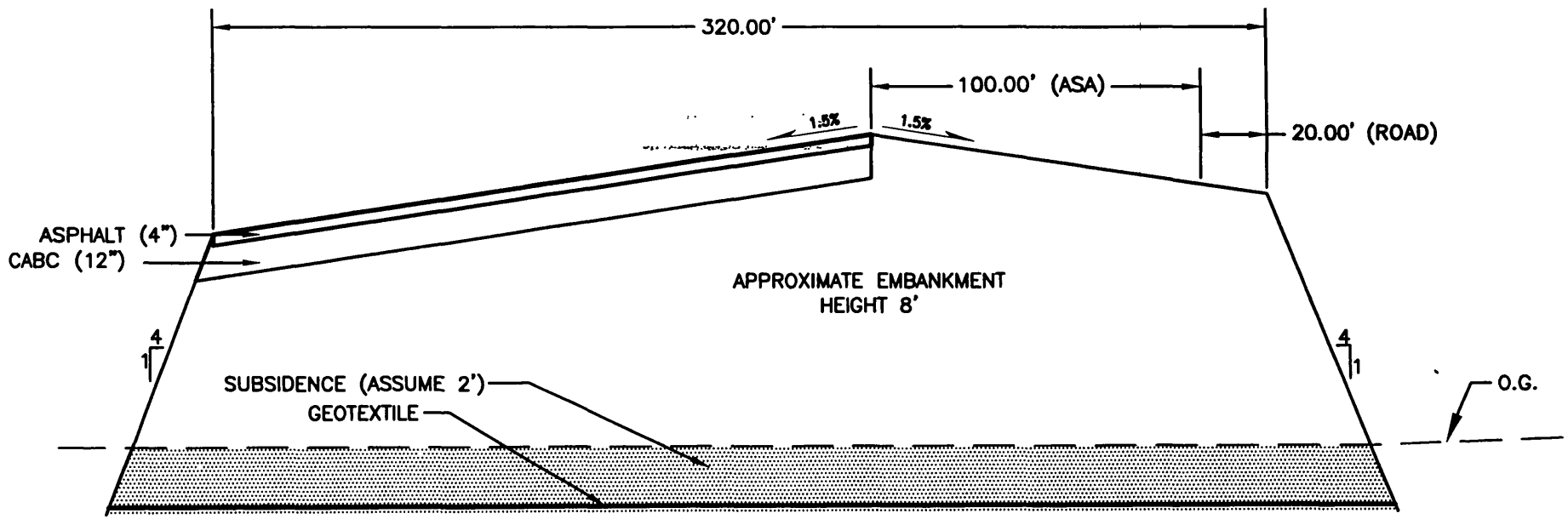

STATE OF ALASKA
DEPARTMENT OF TRANSPORTATION AND PUBLIC FACILITIES
CENTRAL REGION AVIATION DESIGN

HOOPER BAY AIRPORT

AIRPORT RECONSTRUCTION

DESIGNED	DATE 4/27/2004
APPROVED	SHEET 3 OF 5

ACCESS ROAD

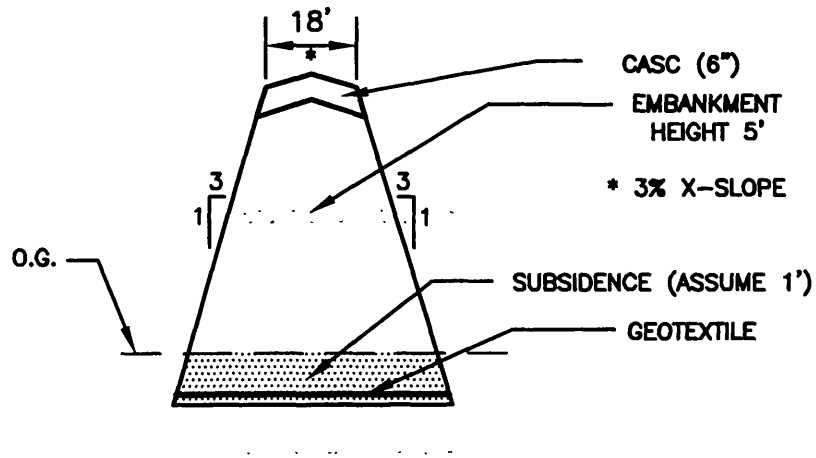

STATE OF ALASKA
DEPARTMENT OF TRANSPORTATION AND PUBLIC FACILITIES
CENTRAL REGION AVIATION DESIGN

HOOPER BAY AIRPORT

AIRPORT RECONSTRUCTION

DESIGNED	DATE 12/2/2004
APPROVED	SHEET 4 OF 5

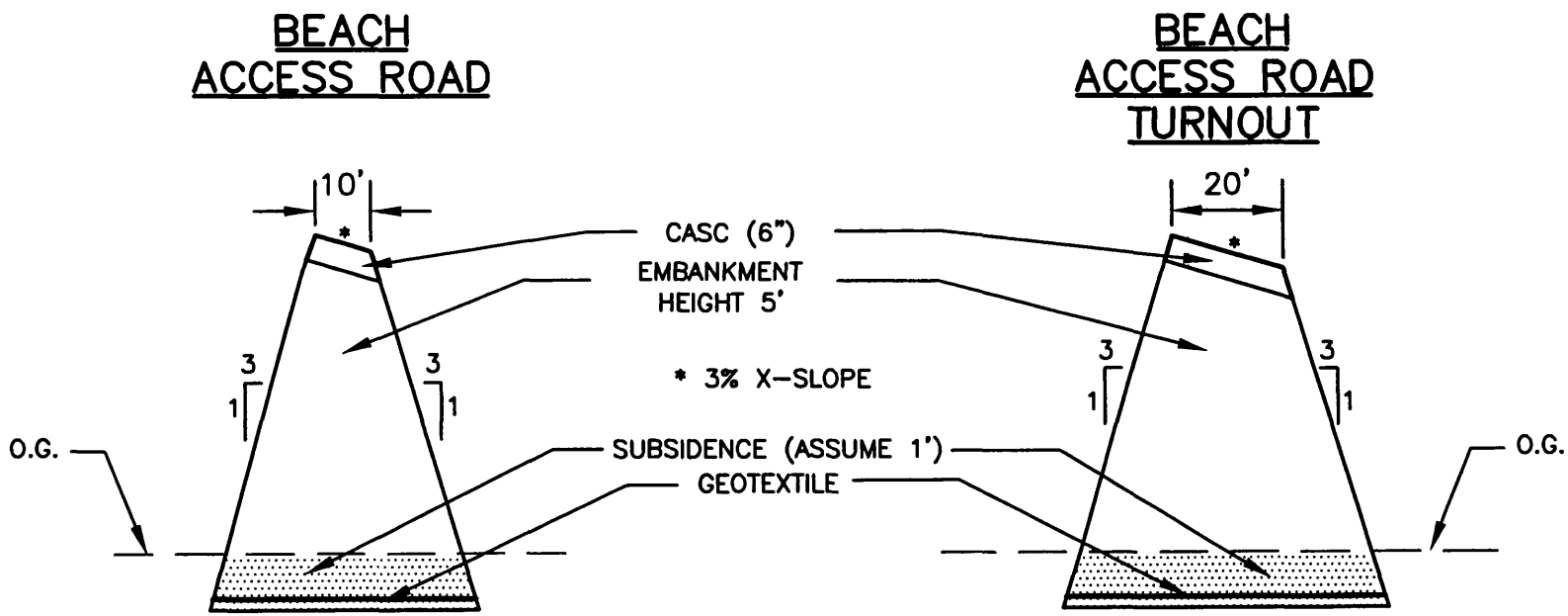

STATE OF ALASKA
DEPARTMENT OF TRANSPORTATION AND PUBLIC FACILITIES
CENTRAL REGION AVIATION DESIGN

HOOPER BAY AIRPORT

AIRPORT RECONSTRUCTION

DESIGNED	DATE 4/27/2004
APPROVED	SHEET 5 OF 5

RUNWAY

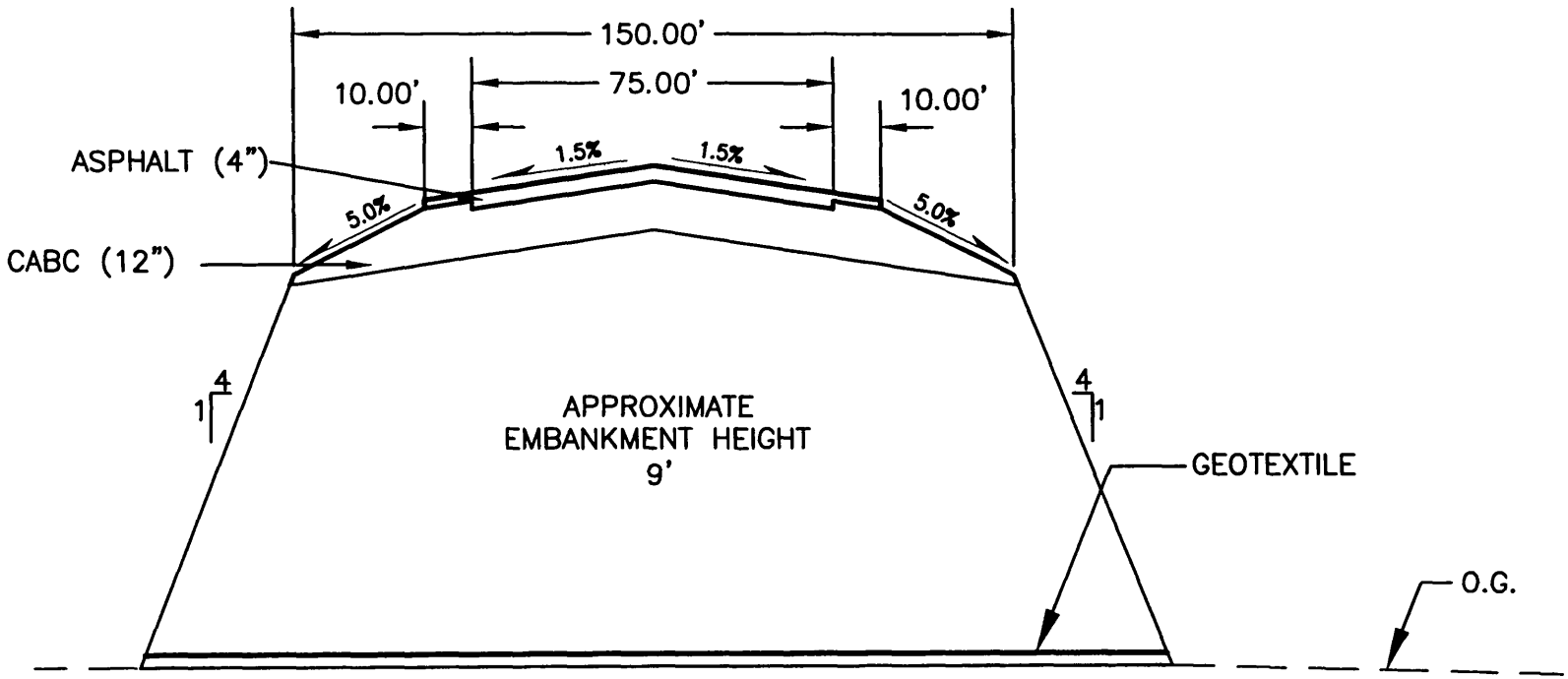

STATE OF ALASKA **DEPARTMENT OF TRANSPORTATION AND PUBLIC FACILITIES** CENTRAL REGION AVIATION DESIGN	**HOOPER BAY AIRPORT** AIRPORT RELOCATION	DESIGNED APPROVED	DATE 9/29/2004 SHEET 1 OF 4

TAXIWAY

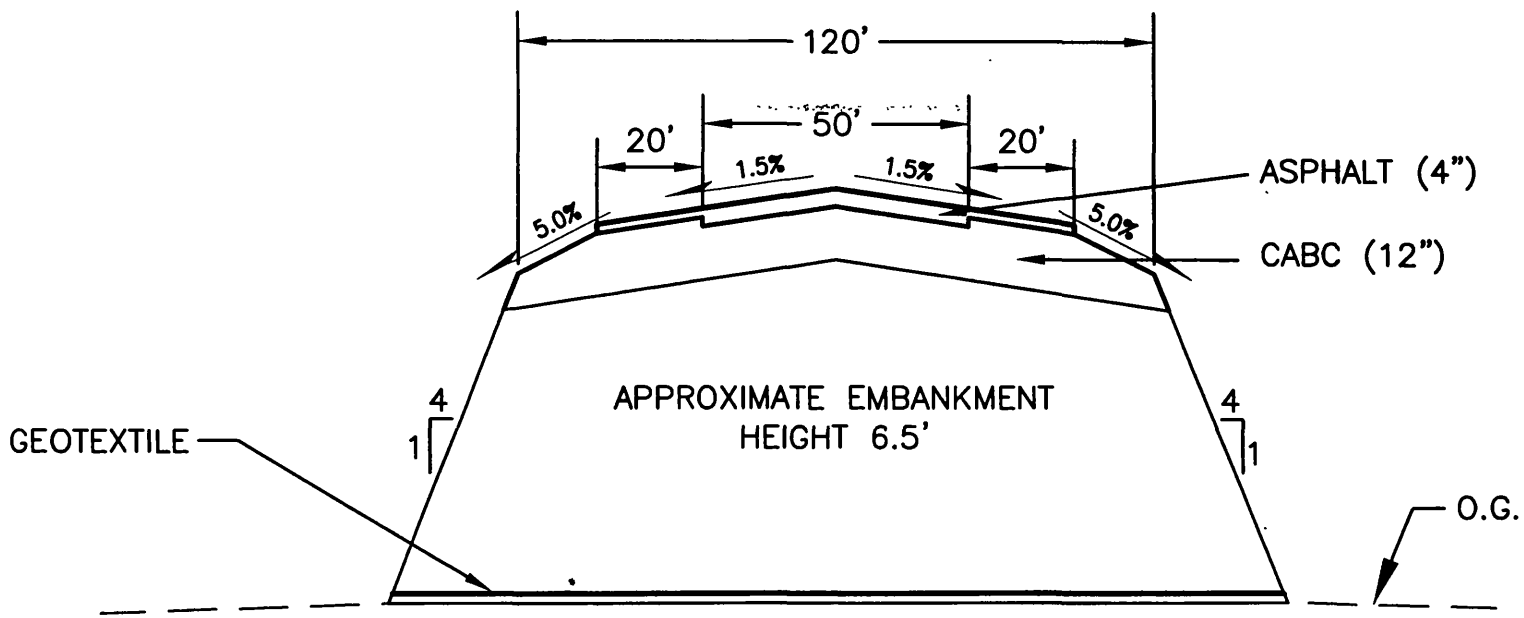

STATE OF ALASKA **DEPARTMENT OF TRANSPORTATION AND PUBLIC FACILITIES** CENTRAL REGION AVIATION DESIGN	**HOOPER BAY AIRPORT** AIRPORT RELOCATION	DESIGNED APPROVED	DATE 9/29/2004 SHEET 2 OF 4

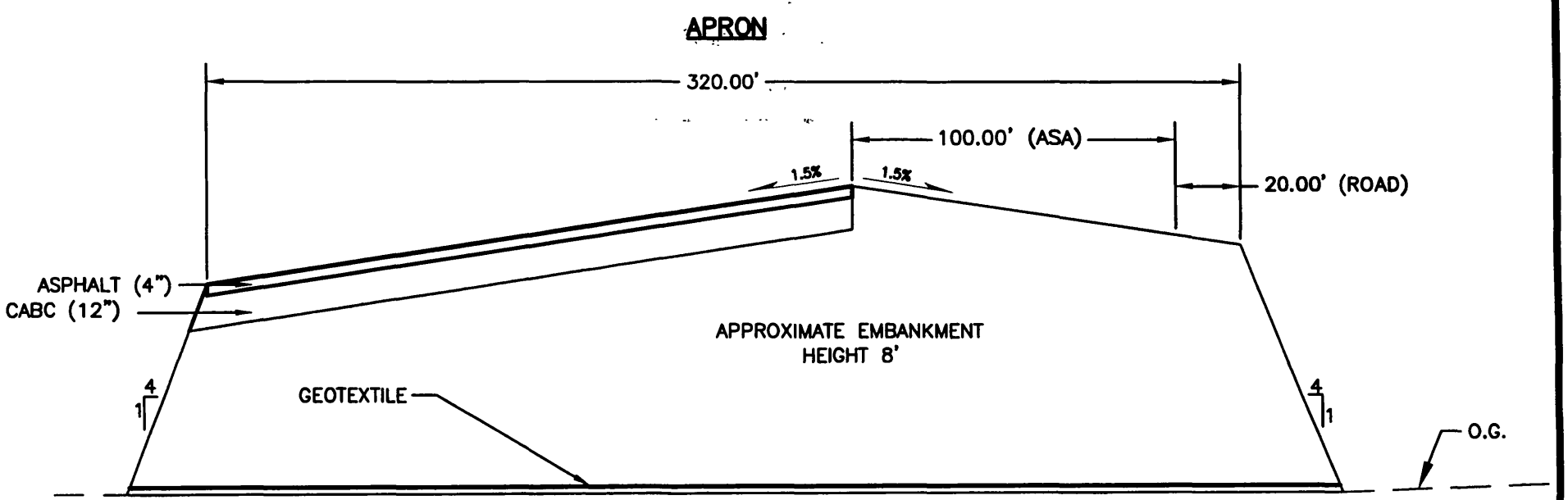

STATE OF ALASKA
DEPARTMENT OF TRANSPORTATION AND PUBLIC FACILITIES
CENTRAL REGION AVIATION DESIGN

HOOPER BAY AIRPORT

AIRPORT RELOCATION

DESIGNED	DATE 9/29/2004
APPROVED	SHEET 3 OF 4

ACCESS ROAD

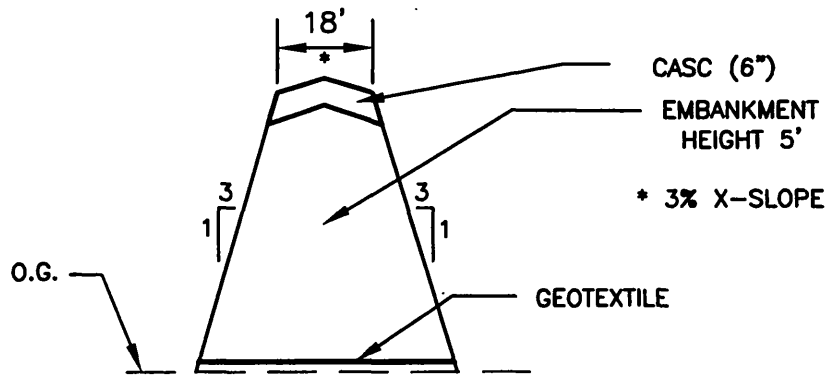

STATE OF ALASKA
DEPARTMENT OF TRANSPORTATION AND PUBLIC FACILITIES
CENTRAL REGION AVIATION DESIGN

HOOPER BAY AIRPORT

AIRPORT RELOCATION

DESIGNED	DATE 12/2/2004
APPROVED	SHEET 4 OF 4

APPENDIX V – COST ESTIMATES

BID SCHEDULE

Engineers Estimate

STATE OF ALASKA
DEPARTMENT OF TRANSPORTATION AND PUBLIC FACILITIES
CENTRAL REGION

The bidder shall insert a unit bid price for each pay item listed below. Type or print legibly.

Pay Item Number	Pay Item Description	Pay Unit	Quantity	Unit Bid Price	Amount Bid
	Basic Bid				
G-100a	Mobilization and Demobilization	L.S.	All Req'd	$	
G-130a	Field Office	L.S.	All Req'd	$	
G-130b	Field Laboratory	L.S.	All Req'd	$	
G-131b	Engineering Transportation (ATV)	Each	1	$	
G-135a	Construction Surveying by the Contractor	L.S.	All Req'd	$	
G-135b	Conditional Survey Party	hr	15	$	
G-150a	Equipment Rental, Wide Pad Dozer 65 HP min.	hr	30	$	
P-152j	Pourous Backfill	C.Y.	7300	$	
P-157a	Erosion and Pollution Control Administration	L.S.	All Req'd	$	
P-157b	Temporary Erosion and Pollution Control	C.S.	All Req'd	$	
P-208a	Crushed Aggregate Surface Course	C.Y.	35	$	
P-209a	Crushed Aggregate Base Course	C.Y.	550	$	
P-31Xx	Emulsion Stabilized Base Course	S.Y.	1600	$	
P-31Xx	Asphalt Cement	Ton	132	$	
P-31Xx	Portland Cement	Ton	45	$	
P-680a	Silt Fence	ft	18500	$	
P-681a	Geotextile, Separation	S.Y.	15400	$	

BID SCHEDULE

Engineers Estimate

STATE OF ALASKA
DEPARTMENT OF TRANSPORTATION AND PUBLIC FACILITIES
CENTRAL REGION

The bidder shall insert a unit bid price for each pay item listed below. Type or print legibly.

Pay Item Number	Pay Item Description	Pay Unit	Quantity	Unit Bid Price	Amount Bid

Total Basic Bid (BB):

Project Design (PD) @ 15%:

Construction Engineering (CE) @ 15%:

ICAP @ 4.05%:

Project Total (BB + PD + CE + ICAP):

INTERIM PROJECT ESTIMATE

*** Estimate based on the following:**

Access Road:
- 1.6 mile two-way single lane access road with pullouts every 1000'
- Typical section: geotextile, separation overlain with 18" of material less than 8"

Runway Repairs:
- Runway repairs based on 566' x 75' area.
- Typical section: 12" Emulsion Treated Base capped with single High Float application.

Backup information is located in the project file.

BID SCHEDULE

Engineers Estimate

STATE OF ALASKA
DEPARTMENT OF TRANSPORTATION AND PUBLIC FACILITIES
CENTRAL REGION

The bidder shall insert a unit bid price for each pay item listed below. Type or print legibly.

Pay Item Number	Pay Item Description	Pay Unit	Quantity	Unit Bid Price	Amount Bid
	Basic Bid				
D-701a	Corrugated Metal Pipe, 36 inch	L.F.	850	$	
D-760c	Thaw Wire Installation	L.F.	850	$	
F-162a	8-ft. Chain Link Fence	L.F.	9500	$	
F-162b	12-ft. Single Swing Gate	Each	1	$	
G-100a	Mobilization and Demobilization	L.S.	All Req'd	$	
G-130a	Field Office	L.S.	All Req'd	$	
G-130b	Field Laboratory	L.S.	All Req'd	$	
G-131a	Engineering Transportation (Truck)	Each	1	$	
G-131b	Engineering Transportation (ATV)	Each	1	$	
G-135a	Construction Surveying by the Contractor	L.S.	All Req'd	$	
G-135b	Conditional Survey Party	hr	40	$	
G-135c	Monuments by the Contractor	L.S.	All Req'd	$	
G-150a	Equipment Rental, Wide Pad Dozer 65 HP min.	hr	30	$	
X-XXXx	Runway Lighting	L.S.	All Req'd	$	
X-XXXx	Taxiway Lighting	L.S.	All Req'd	$	
X-XXXx	Temporary Edge Lighting	L.S.	All Req'd	$	
L-101b	Rotating Beacon - Medium Intensity, L-801A	Each	1	$	

BID SCHEDULE

Engineers Estimate

STATE OF ALASKA
DEPARTMENT OF TRANSPORTATION AND PUBLIC FACILITIES
CENTRAL REGION

The bidder shall insert a unit bid price for each pay item listed below. Type or print legibly.

Pay Item Number	Pay Item Description	Pay Unit	Quantity	Unit Bid Price	Amount Bid
L-107a	8-ft. Lighted Wind Cone, In Place	Each	1	$	
L-107c	8-ft. Unlighted Wind Cone, In Place	Each	1	$	
L-109c	Electrical Enclosure and Foundation in Place	Each	1	$	
L-109d	Installation of Electrical Equipment in New or Existing Structure	Each	1	$	
P-152h	Borrow Embankment	C.Y.	548350	$	
P-157a	Erosion and Pollution Control Administration	L.S.	All Req'd	$	
P-157b	Temporary Erosion and Pollution Control	C.S.	All Req'd	$	
P-160a	Excavation and Disposal of Pavement	S.Y.	40000	$	
P-165a	Removal and Disposal of Existing Structures	L.S.	All Req'd	$	
P-208a	Crushed Aggregate Surface Course	C.Y.	3150	$	
P-209a	Crushed Aggregate Base Course	C.Y.	38650	$	
P-401a	Asphalt Concrete (PG 52-28)	Ton	16300	$	
P-401c	Asphalt Cement (PG 52-28)	Ton	897	$	
P-603a	Bituminous Tack Coat	Ton	27	$	
P-620c	Runway and Taxiway Painting	L.S.	All Req'd	$	
P-630a	Pavement Grooving	S.Y.	37500	$	
P-640b	Segmented Circle (Panel Type)	L.S.	All Req'd	$	
P-650a	Soil Anchor Tie-down	Set	3	$	
P-660x	Reflective Markers	L.S.	All Req'd	$	
P-660d	Delineator, Flexible	L.S.	All Req'd	$	
P-661x	Standard Sign	L.S.	All Req'd	$	

BID SCHEDULE

Engineers Estimate

STATE OF ALASKA
DEPARTMENT OF TRANSPORTATION AND PUBLIC FACILITIES
CENTRAL REGION

The bidder shall insert a unit bid price for each pay item listed below. Type or print legibly.

Pay Item Number	Pay Item Description	Pay Unit	Quantity	Unit Bid Price	Amount Bid
P-671a	Runway Closure Marker	Each	2	$	
P-680a	Silt Fence	L.F.	8600	$	
P-681a	Geotextile, Separation	S.Y.	174650	$	
S-142c	Equipment Storage Building (Steel Floor on Skid)	Each	2	$	
S-142d	Rotating Beacon Roof Access System	Each	1	$	
S-142e	Hoist System	Each	1	$	
S-142f	Heating System	Each	1	$	
S-143a	Heating Fuel Tank (1000 G)	Each	1	$	
S-143b	Fuel (2000 G)	L.S.	All Req'd	$	
S-143d	Electric Dispensing System	Each	1	$	
S-143e	Motor Vehicle Fuel-Dispensing Tank (1000 G)	Each	1	$	
T-901b	Seeding	lb	215	$	
T-908d	Mulching	lb	7534	$	

Total Basic Bid (BB):
Project Design (PD) @ 15%:
Construction Engineering (CE) @ 15%
ICAP @ 4.05%:
Project Total (BB + PD + CE + ICAP):

EXISTING AIRPORT RECONSTRUCTION ESTIMATE -

BID SCHEDULE

Engineers Estimate

STATE OF ALASKA
DEPARTMENT OF TRANSPORTATION AND PUBLIC FACILITIES
CENTRAL REGION

The bidder shall insert a unit bid price for each pay item listed below. Type or print legibly.

Pay Item Number	Pay Item Description	Pay Unit	Quantity	Unit Bid Price	Amount Bid

Possible Additive Alternates:

X-XXXx	Crosswind Runway	L.S.	All Req'd	$
X-XXXx	Electrical Line Extension	Mile	0.3	$
X-XXXx	Beach Access Road	L.S.	All Req'd	$
X-XXXx	Erosion Repair	L.S.	All Req'd	$

<u>* Estimate based on the following:</u>

The utilization of the existing facilities has been considered in preparation of this estimate

Design Criteria:
- Design Aircraft: DC-6 (B-III)
- NPI w/visibility > 1 mile / PAPI & REIL pads will be constructed
- Medium intensity lighting, wind cones, segmented circle, rotating beacon included
- Two single bay SRE buildings (steel skid) included
- Chain link fence will surround AOA
- Geotextile will be placed under all embankement
- Assume existing right of way sufficient for possible crosswind runway

Runway:
- 4500' x 75' w/ 5100' x 150' safety area
- Typical section: 4' embankment (above existing) / 1' CABC / 4 inches asphalt

Apron:
- 900' x 300' w/ 20' access road
- Typical section: Variable embankment / surface same as runway
- 5 150' x 150' lease lots & 150' x 150' SRE building pad

Taxiway:
- Parallel taxiways - 400' x 50' w/ 400' x 120' safety area
- Typical section: 6.5' embankment / surface same as runway

Access Road:
- 7920' x 18' two-lane road
- Typical section: 5' embankment / 6 inches CASC

Typical sections located in Appendix IV
Backup information is located in the project file.

BID SCHEDULE

Engineers Estimate

STATE OF ALASKA
DEPARTMENT OF TRANSPORTATION AND PUBLIC FACILITIES
CENTRAL REGION

The bidder shall insert a unit bid price for each pay item listed below. Type or print legibly.

Pay Item Number	Pay Item Description	Pay Unit	Quantity	Unit Bid Price	Amount Bid

Basic Bid

D-701a	Corrugated Metal Pipe, 36 inch	L.F.	1650	$
D-760c	Thaw Wire Installation	L.F.	1650	$
F-162a	8-ft. Chain Link Fence	L.F.	16450	$
F-162b	12-ft. Single Swing Gate	Each	1	$
G-100a	Mobilization and Demobilization	L.S.	All Req'd	$
G-130a	Field Office	L.S.	All Req'd	$
G-130b	Field Laboratory	L.S.	All Req'd	$
G-131a	Engineering Transportation (Truck)	Each	1	$
G-131b	Engineering Transportation (ATV)	Each	1	$
G-135a	Construction Surveying by the Contractor	L.S.	All Req'd	$
G-135b	Conditional Survey Party	hr	40	$
G-135c	Monuments by the Contractor	L.S.	All Req'd	$
G-150a	Equipment Rental, Wide Pad Dozer 65 HP min.	hr	30	$
X-XXXx	Runway Lighting	L.S.	All Req'd	$
X-XXXx	Taxiway Lighting	L.S.	All Req'd	$
X-XXXx	Temporary Edge Lighting	L.S.	All Req'd	$
L-101b	Rotating Beacon - Medium Intensity, L-801A	Each	1	$

BID SCHEDULE

Engineers Estimate

STATE OF ALASKA
DEPARTMENT OF TRANSPORTATION AND PUBLIC FACILITIES
CENTRAL REGION

The bidder shall insert a unit bid price for each pay item listed below. Type or print legibly.

Pay Item Number	Pay Item Description	Pay Unit	Quantity	Unit Bid Price	Amount Bid
L-107a	8-ft. Lighted Wind Cone, In Place	Each	1	$	
L-107c	8-ft. Unlighted Wind Cone, In Place	Each	1	$	
L-109c	Electrical Enclosure and Foundation in Place	Each	1	$	
L-109d	Installation of Electrical Equipment in New or Existing Structure	Each	1	$	
P-152h	Borrow Embankment	C.Y.	526600	$	
P-157a	Erosion and Pollution Control Administration	L.S.	All Req'd	$	
P-157b	Temporary Erosion and Pollution Control	C.S.	All Req'd	$	
P-160a	Excavation and Disposal of Pavement	S.Y.	40000	$	
P-165a	Removal and Disposal of Existing Structures	L.S.	All Req'd	$	
P-208a	Crushed Aggregate Surface Course	C.Y.	5960	$	
P-209a	Crushed Aggregate Base Course	C.Y.	38650	$	
P-401a	Asphalt Concrete (PG 52-28)	Ton	16300	$	
P-401c	Asphalt Cement (PG 52-28)	Ton	897	$	
P-603a	Bituminous Tack Coat	Ton	27	$	
P-620c	Runway and Taxiway Painting	L.S.	All Req'd	$	
P-630a	Pavement Grooving	S.Y.	37500	$	
P-640b	Segmented Circle (Panel Type)	L.S.	All Req'd	$	
P-650a	Soil Anchor Tie-down	Set	3	$	
P-660x	Reflective Markers	L.S.	All Req'd	$	
P-660d	Delineator, Flexible	L.S.	All Req'd	$	

BID SCHEDULE

Engineers Estimate

STATE OF ALASKA
DEPARTMENT OF TRANSPORTATION AND PUBLIC FACILITIES
CENTRAL REGION

The bidder shall insert a unit bid price for each pay item listed below. Type or print legibly.

Pay Item Number	Pay Item Description	Pay Unit	Quantity	Unit Bid Price	Amount Bid
P-661x	Standard Sign	L.S.	All Req'd	$	
P-671a	Runway Closure Marker	Each	2	$	
P-680a	Silt Fence	L.F.	46800	$	
P-681a	Geotextile, Separation	S.Y.	267360	$	
S-142c	Equipment Storage Building (Steel Floor on Skid)	Each	2	$	
S-142d	Rotating Beacon Roof Access System	Each	1	$	
S-142e	Hoist System	Each	1	$	
S-142f	Heating System	Each	1	$	
S-143a	Heating Fuel Tank (1000 G)	Each	1	$	
S-143b	Fuel (2000 G)	L.S.	All Req'd	$	
S-143d	Electric Dispensing System	Each	1	$	
S-143e	Motor Vehicle Fuel-Dispensing Tank (1000 G)	Each	1	$	
T-901b	Seeding	lb	300	$	
T-908d	Mulching	lb	10460	$	
X-XXXx	Stream Crossing	S.F.	1800	$	

Total Basic Bid (BB):
Project Design (PD) @ 15%:
Construction Engineering (CE) @ 15%
ICAP @ 4.05%:
Project Total (BB + PD + CE + ICAP):

AIRPORT RELOCATION ESTIMATE

BID SCHEDULE

Engineers Estimate

STATE OF ALASKA
DEPARTMENT OF TRANSPORTATION AND PUBLIC FACILITIES
CENTRAL REGION

The bidder shall insert a unit bid price for each pay item listed below. Type or print legibly.

Pay Item Number	Pay Item Description	Pay Unit	Quantity	Unit Bid Price	Amount Bid

Possible Additive Alternates:

X-XXXx	Crosswind Runway	L.S.	All Req'd
X-XXXx	Electrical Line Extension	Mile	3.5
X-XXXx	Property Acquisition	Acre	325

*** Estimate based on the following:**

Design Criteria:
- Design Aircraft: DC-6 (B-III)
- NPI w/visibility > 1 mile / PAPI & REIL pads will be constructed
- Medium intensity lighting, wind cones, segmented circle, rotating beacon included
- Two single bay SRE buildings (steel skid) included
- Chain link fence will surround AOA
- Geotextile will be placed under all embankment

Runway:
- 4500' x 75' w/ 5100' x 150' safety area
- Typical section: 9' embankment / 1' CABC / 4 inches asphalt

Apron:
- 900' x 300' w/ 20' access road
- Typical section: Variable embankment / surface same as runway
- 5 150' x 150' lease lots & 150' x 150' SRE building pad

Taxiway:
- Parallel taxiways - 400' x 50' w/ 400' x 120' safety area
- Typical section: 6.5' embankment / surface same as runway

Access Road:
- 3 miles x 18' two-lane road
- Typical section: 5' embankment / 6 inches CASC

Typical sections located in Appendix IV
Backup information is located in the project file.

APPENDIX VI - PROPERTY PLATS / PLANS

UNSURVEYED TOWNSHIP 17 NORTH, RANGE 92 WEST OF THE SEWARD MERIDIAN, ALASKA

PROTRACTION DIAGRAM NO 57-10 OFFICIALLY FILED 8/18/1959

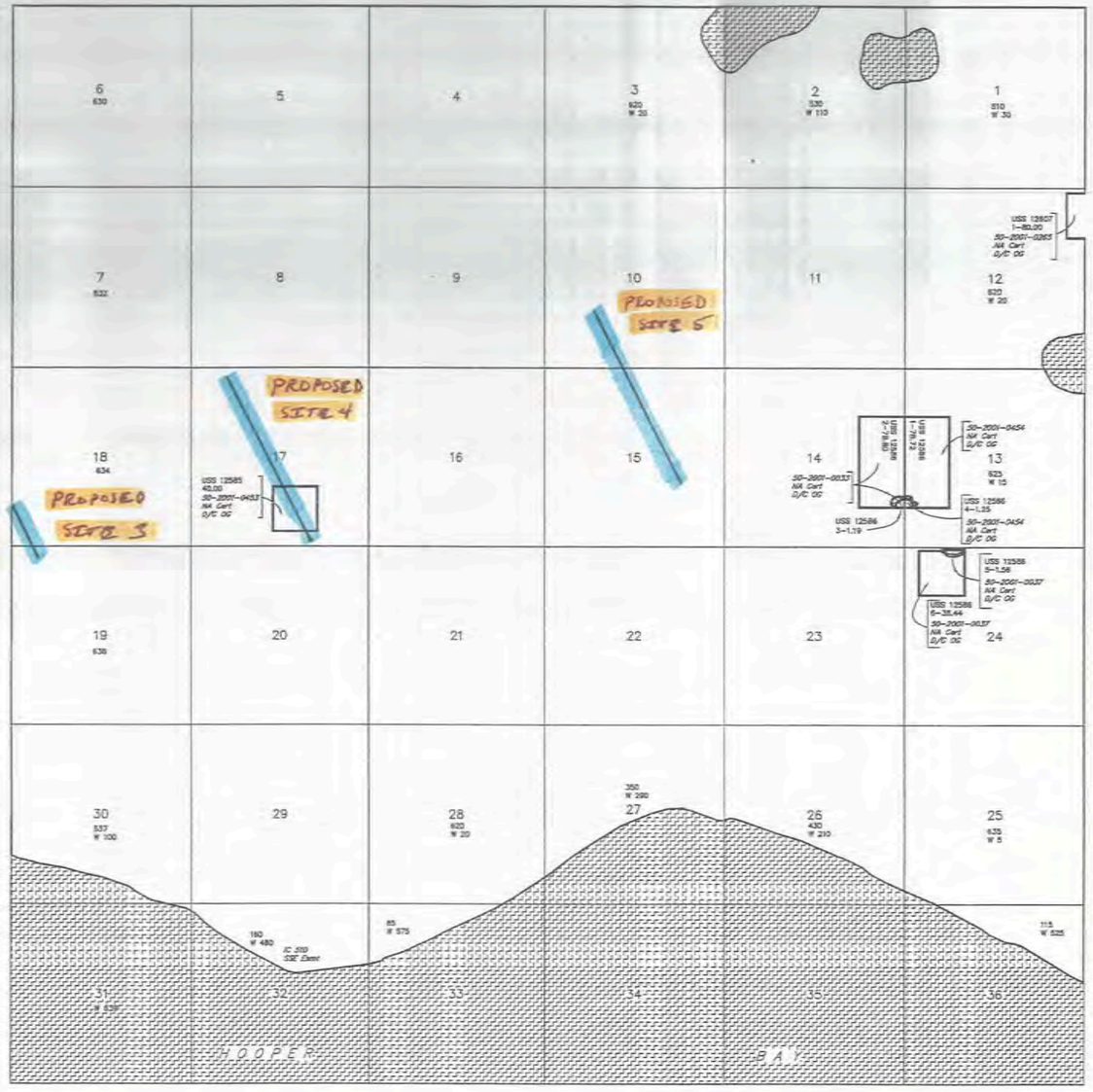

Lat 61°30'48.407"N
Long 166°51'49.125"W

SCALE in chains
10 5 0 10 20 30 40

WARNING:
This plat is the Bureau's Record of Title, and should be used only as a graphic display of the township survey data. Records hereon do not reflect title changes which may have been affected by inland movements of rivers or other bodies of water. Refer to the cadastral surveys for official survey information.

CURRENT TO	AVCP, FWS	Sew Mer
12-19-2002		T 17 N
		R 92 W

ACAD

STATUS OF PUBLIC DOMAIN
LAND AND MINERAL TITLES

MTP

FOR ORDERS EFFECTING DISPOSAL OR USE OF UNIDENTIFIED LANDS WITHDRAWN FOR CLASSIFICATION MINERALS, WATER AND/OR OTHER PUBLIC PURPOSES REFER TO INDEX OF MISCELLANEOUS DOCUMENTS.

PL 92-203 Wdl F14868 Lds W/I F14868-A2

PLO 5183 Wdl Cl & Ald of Leg Lds / Interest not conveyed

PL 96-487 Wdl Yukon Delta NWR (Clarence Rhode Unit) entire Tp

ClibPDF - www.fastio.com

UNSURVEYED TOWNSHIP 17 NORTH RANGE 93 WEST OF THE SEWARD MERIDIAN, ALASKA

PROTRACTION DIAGRAM NO. S7-11 OFFICIALLY FILED 8/18/1959

STATUS OF PUBLIC DOMAIN
LAND AND MINERAL TITLES

MTP

FOR ORDERS EFFECTING DISPOSAL OR USE OF UNI-IDENTIFIED LANDS WITHDRAWN FOR CLASSIFICATION MINERALS, WATER AND/OR OTHER PUBLIC PURPOSES REFER TO INDEX OF MISCELLANEOUS DOCUMENTS.

PL 92-203 Wdl F14866 Lds W/I F14866-A, F14866-A2

F14866-A2 V/Sel Apln NA's & Unpat Lds W/I F14866 12(c)

PLO 5183 Wdl All of Leg & CI affects Lds/Interests not conveyed

PLO 5184 Wdl CI affects Lds/Interests not conveyed

Lat 61°30'48.407"N
Long 166°02'42.127"W

WARNING:
This plat is the Bureau's Record of Title, and should be used only as a graphic display of the township survey data. Records hereon do not reflect title changes which may have been effected by latent movements of rivers or other bodies of water. Refer to the cadastral surveys for official survey information.

CURRENT TO	FWS
12-19-2002	

Sew Mer
T 17 N
R 93 W

ACAD

ClibPDF - www.fastio.com

TOWNSHIP 17N RANGE 93W OF THE SEWARD MERIDIAN, ALASKA

LEGEND

BASE INFORMATION

- HYDROGRAPHY
- SURVEY LINE
- SURVEY LOT LINE
- TOWNSHIP/SECTION GRID
- 1/4 SECTION LINE
- HIGHWAY
- ROAD
- TRAIL
- RAILROAD
- ELECTRICAL POWER LINE
- TELEPHONE LINE
- PIPELINE
- AIRPORT/LANDING STRIP
- HORIZONTAL CONTROL
- CONTROL MONUMENT

STATUS INFORMATION

- TITLE
- BOUNDARY
- CLASSIFICATION
- DISPOSAL
- MUNICIPAL
- RESTRICTION
- FEDERAL ACTION
- MENTAL HEALTH TRUST
- [ ] LIMITS OF ACTION
- NAVIGATIONAL AIDE
- CABIN PERMIT
- TRAPPING CABIN PERMIT
- TRESPASS LOCATION

SURFACE WATER RIGHTS

- APPLICATION
- PERMIT
- CERTIFICATE

SUB-SURFACE WATER RIGHTS

- APPLICATION
- PERMIT
- CERTIFICATE

IN-STREAM FLOW RESERVATION

- APPLICATION
- CERTIFICATE

DAM, WEIR, BARRIER

- APPLICATION
- PERMIT
- CERTIFICATE

VICINITY MAP

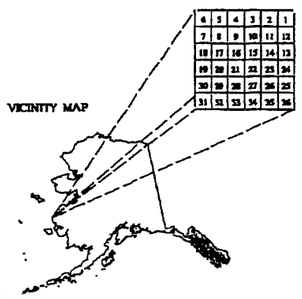

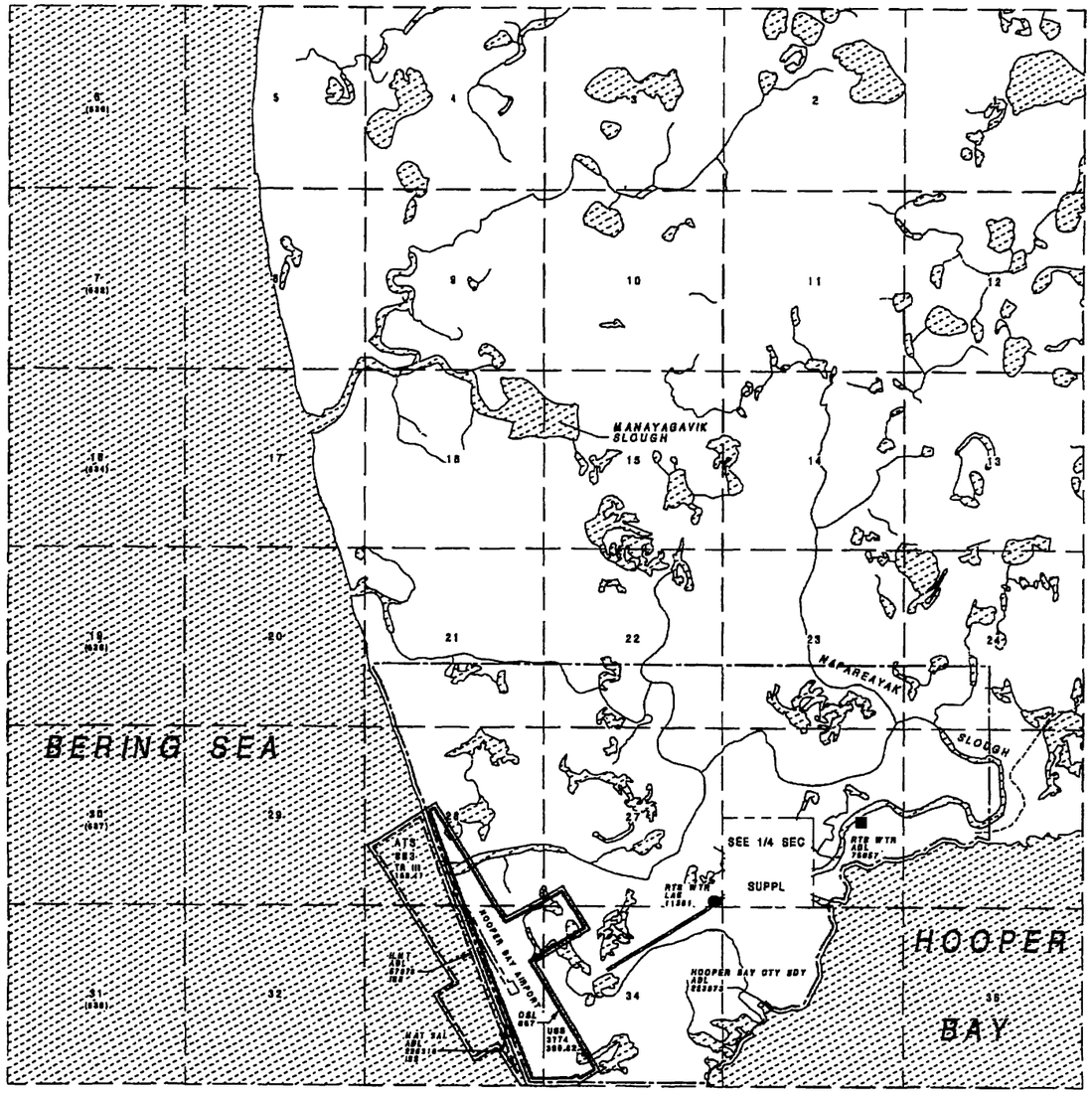

AN INDEX OF STATUS PLAT ABBREVIATIONS IS INCLUDED WITH EACH APERTURE CARD SET OF STATE STATUS PLATS.

SCALE

1 inch = 2640 feet

2640 1320 660 0 1000 2000 5280 FEET

1 inch = 40 chains

40 20 10 5 0 40 80 CHAINS

STATUS PLAT

GRAPHIC ILLUSTRATION ONLY, SOURCE DOCUMENTS REMAIN THE OFFICIAL RECORD

THE STATE OWNS ALL LAND UNDER WATERS THAT ARE NAVIGABLE-IN-FACT, ARE SUBJECT TO THE EBB AND FLOW OF THE TIDES, OR ARE RIPARIAN OR LITTORAL TO UPLANDS OWNED BY THE STATE.

BASED ON:

COORDINATES:
ALASKA STATE PLANE ZONE 6
SE CORNER OF TOWNSHIP:
X 402135.285
Y 2745149.423
LAT 61 30 48.487 N
LONG 166 02 42.127 W

HYDROGRAPHY:
USGS HOOPER BAY (C3) AND (C4) REVISED BY BLM FROM AERIAL HIGH ALTITUDE PHOTOGRAPHY 1978–1985

LAND NET:
BLM PROTRACTION DIAGRAM 57–11; APPROVED 08/18/1959
USS 2036; ACCEPTED 04/24/1935
USS 3774; ACCEPTED 10/09/1964
USS 4052; ACCEPTED 08/01/1964
ATS 883; APPROVED 01/12/1973

OTHER ACTIONS AFFECTING DISPOSAL OR USE OF STATE LANDS: SEE THE LAS CASEFILE OR ORIGINAL SOURCE DOCUMENTS FOR ADDITIONAL INFORMATION:

ENTIRELY WITH BETHEL RECORDING DISTRICT
ADL 223973; CITY OF HOOPER BAY, CORPORATE BOUNDARY PER ORDER OF INCORPORATION DATED 03/07/1966

ATTENTION STATUS PLAT USERS: ON THIS PLAT, ALL STATUS LINES CLOSE FOR ACTIONS THAT EXTEND INTO ADJACENT TOWNSHIPS; THIS INCLUDES STATUS LINES SUCH AS DISPOSAL, MUNICIPAL, TITLE, CLASSIFICATION, ETC. PLEASE REFER TO ADJACENT TOWNSHIPS OR LAS TO DETERMINE IF ACTIONS EXTEND BEYOND THE BOUNDARIES SHOWN ON THIS PLAT. REMEMBER TITLE, CLASSIFICATION, AND RESTRICTION LINES ALWAYS CLOSE ON ALL PLATS.

A PRODUCT OF THE
STATE OF ALASKA
DEPARTMENT OF NATURAL RESOURCES
LAND RECORDS INFORMATION SECTION

BY: MP QUALITY CONTROL CHECKED DATE: 9/27/96

SP
TWP 17N
RNG 93W
SM

USERNAME: sdm

DATE: 08 Sep 94 13:38:37 Sunday

LOCATION: /mnt/mercury/nuscary/plotfiles/sp017n093w_sm006/plots

JrnlINFO 7.0.1,Pre-Release,(Thu Jun 16 22:18:54 PDT 1994)

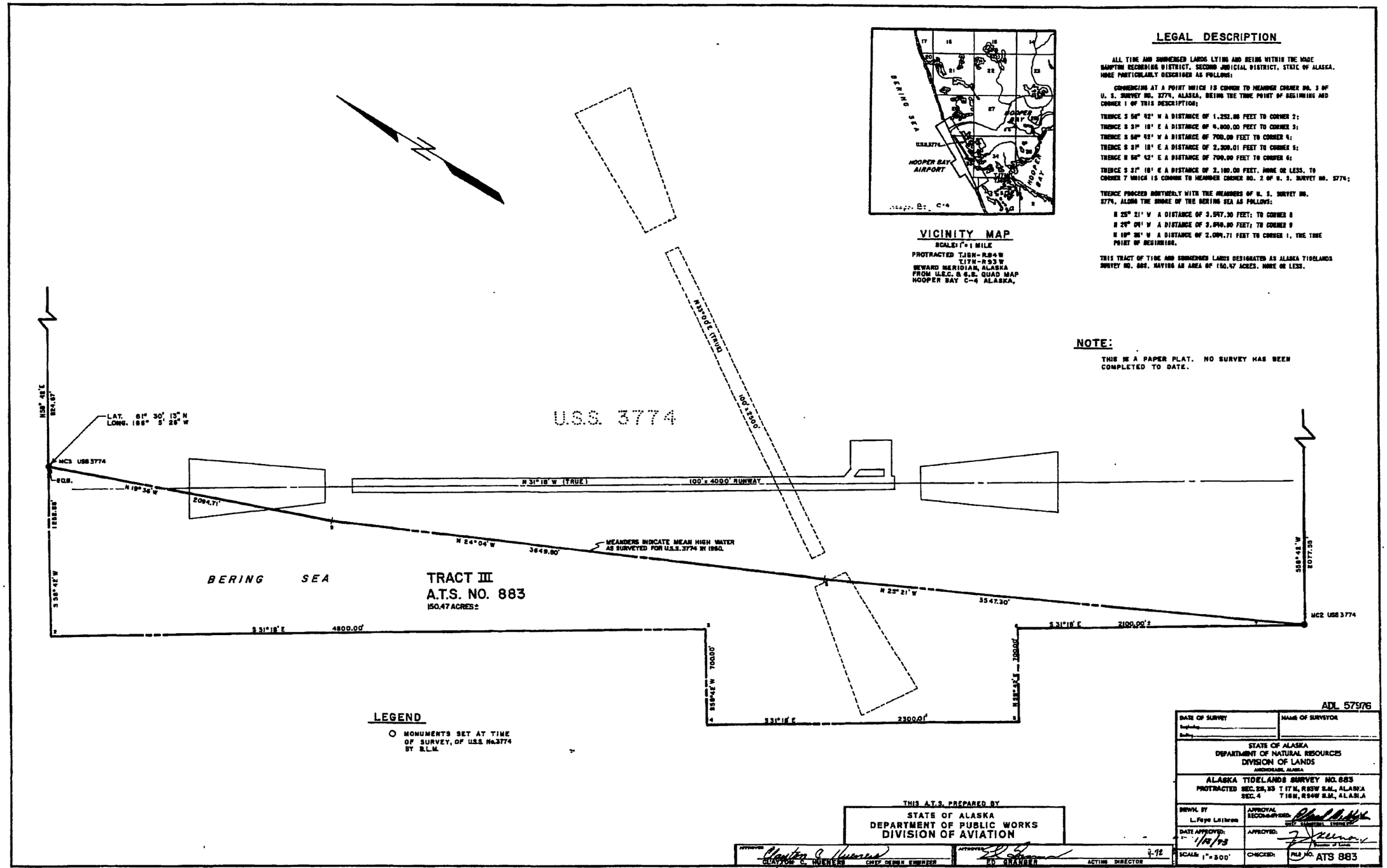

VICINITY MAP

SCALE: 1" = 1 MILE

PROTRACTED T.16N-R94W
T.17N-R93W
SEWARD MERIDIAN, ALASKA
FROM U.S.C. & G.S. QUAD MAP
HOOPER BAY C-4 ALASKA,

LEGAL DESCRIPTION

ALL TIDE AND SUBMERGED LANDS LYING AND BEING WITHIN THE WADE HAMPTON RECORDING DISTRICT, SECOND JUDICIAL DISTRICT, STATE OF ALASKA, MORE PARTICULARLY DESCRIBED AS FOLLOWS:

COMMENCING AT A POINT WHICH IS COMMON TO MEANDER CORNER NO. 3 OF U. S. SURVEY NO. 3774, ALASKA, BEING THE TRUE POINT OF BEGINNING AND CORNER 1 OF THIS DESCRIPTION;

THENCE S 58° 42' W A DISTANCE OF 1,252.88 FEET TO CORNER 2;

THENCE S 31° 18' E A DISTANCE OF 4,800.00 FEET TO CORNER 3;

THENCE S 58° 42' W A DISTANCE OF 700.00 FEET TO CORNER 4;

THENCE S 31° 18' E A DISTANCE OF 2,300.01 FEET TO CORNER 5;

THENCE N 58° 42' E A DISTANCE OF 700.00 FEET TO CORNER 6;

THENCE S 31° 18' E A DISTANCE OF 2,100.00 FEET, MORE OR LESS, TO CORNER 7 WHICH IS COMMON TO MEANDER CORNER NO. 2 OF U. S. SURVEY NO. 3774;

THENCE PROCEED NORTHERLY WITH THE MEANDERS OF U. S. SURVEY NO. 3774, ALONG THE SHORE OF THE BERING SEA AS FOLLOWS:

N 23° 21' W A DISTANCE OF 3,547.30 FEET; TO CORNER 8

N 24° 04' W A DISTANCE OF 3,649.90 FEET; TO CORNER 9

N 19° 36' W A DISTANCE OF 2,094.71 FEET TO CORNER 1, THE TRUE POINT OF BEGINNING.

THIS TRACT OF TIDE AND SUBMERGED LANDS DESIGNATED AS ALASKA TIDELANDS SURVEY NO. 883, HAVING AN AREA OF 150.47 ACRES, MORE OR LESS.

NOTE:

THIS IS A PAPER PLAT. NO SURVEY HAS BEEN COMPLETED TO DATE.

HOOPER BAY

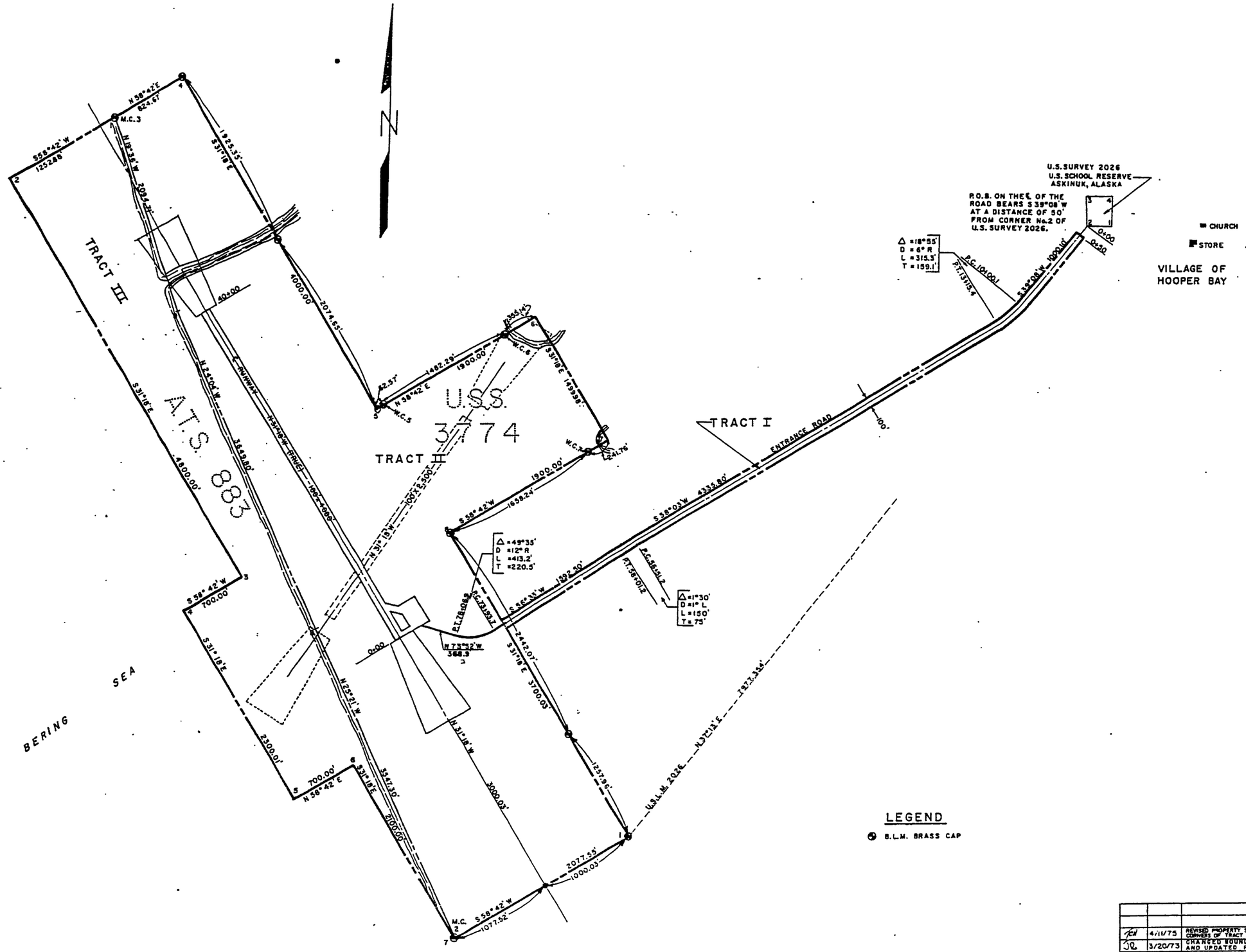

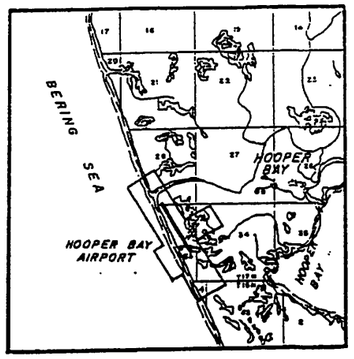

VICINITY MAP

SCALE: 1" = 1 MILE

PROTRACTED T 16N – R 94 W
T 17N – R 93 W
SEWARD MERIDIAN, ALASKA

PROPERTY STATUS

TRACT I

100' ROAD RIGHT-OF-WAY ACCEPTED UNDER PROVISIONS OF U.S.R.S. 2477, 11/18/58.

A.D.A. 10580

ACREAGE: 16.97 ACRES. A.D.A.P. 01

TRACT II

PATENT GRANTED BY B.L.M., DATED 3/7/64, APPROVED 4/14/64, TO U.S.S. No. 3774.

A.D.A. 10159

ACREAGE: 390.62 ACRES. A.D.A.P. 01

TRACT III

I.L.M.T GRANTED BY A.D.L. FOR TIDE AND SUBMERGED LANDS ON 2/2/73.

A.D.A. 10811

ACREAGE: 150.47 ACRES MORE OR LESS. A.D.A.P. 01

NOTES:

1. THIS DRAWING PREPARED FROM U.S. SURVEY No. 3774, B.L.M. FIELD NOTES AND A.D.A., HOOPER BAY AIRPORT PLANS, DATED 10/58, AS-BUILT, REVISED 4/62.
2. ROADWAY CONSTRUCTED DURING 1959 AND 1960 CONSTRUCTION SEASONS.
3. TRACT II ENCOMPASSES THE TOTAL AREA OF FORMER TRACTS II, III AND IV.

LEGEND

⊕ B.L.M. BRASS CAP

THIS PROPERTY PLAN SUPERSEDES PROPERTY PLAN DATED 11/23/66 REVISED THRU 9/5/68.

BY	DATE	CHANGE
JGH	4/11/75	REVISED PROPERTY STATUS AND NUMBERED CORNERS OF TRACT II
JG	3/20/73	CHANGED BOUNDARIES OF TRACT III AND UPDATED PROPERTY STATUS.

REVISIONS

STATE OF ALASKA
DEPARTMENT OF PUBLIC WORKS
DIVISION OF AVIATION

HOOPER BAY AIRPORT

PROPERTY PLAN

APPROVED Clayton C. Huemers
CLAYTON C. HUEMERS, P.E. CHIEF DESIGN ENGINEER

APPROVED James J. Rhode
JAMES J. RHODE TRUNK AIRPORTS ENGINEER

SCALE	DESIGNED	DRAWN	SHEET
1" = 500'	T.T.	L.F.L.	1 OF 1
	CHECKED T.G.H.	DATE 3/15/72	