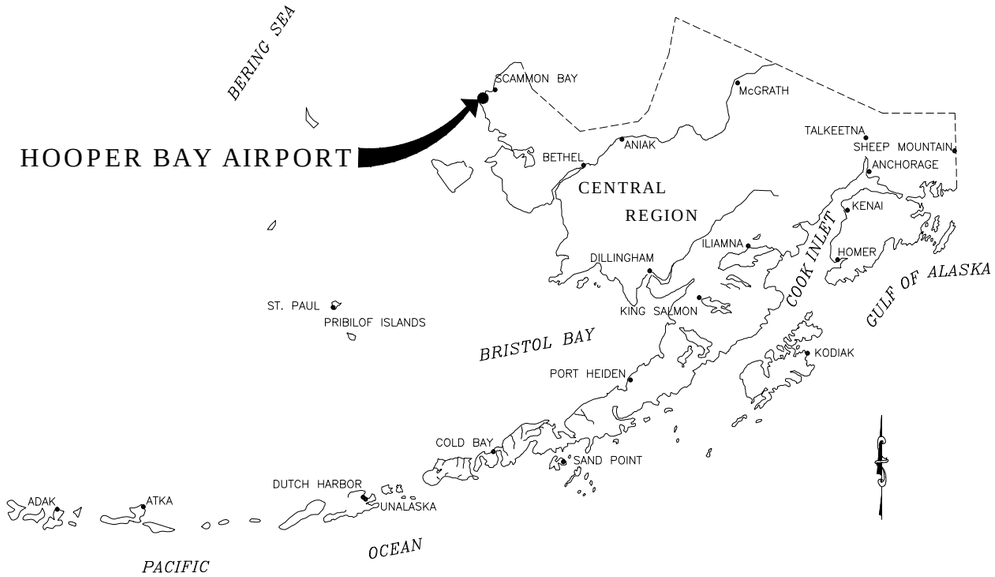

ALASKA CENTRAL REGION
LOCATION MAP

NOT TO SCALE

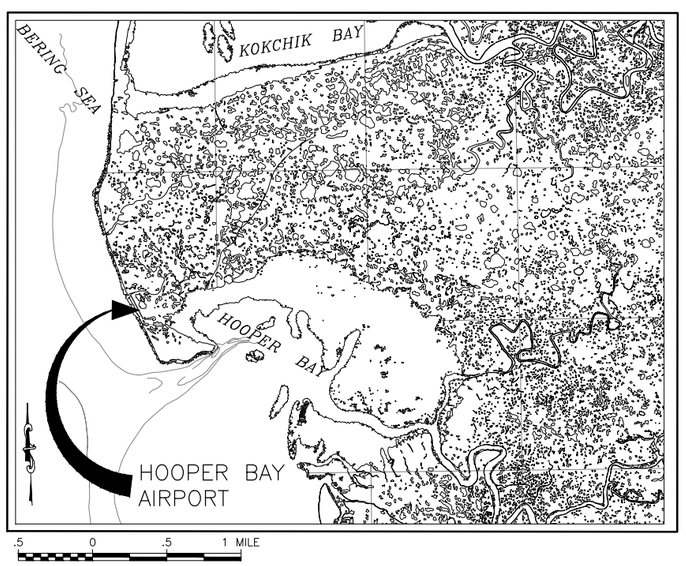

VICINITY MAP

SCALE 1"= 1/2 MILE
T 17 N, R 93 W
SEWARD MERIDIAN
U.S.G.S. HOOPER BAY C-4

CONSTRUCTION PLANS

HOOPER BAY AIRPORT

HOOPER BAY, ALASKA
AIRPORT IMPROVEMENTS
PROJECT No. 57419
AIRPORT IMPROVEMENT PROGRAM
No. 3-02-0XXX-XXX-2014
2014

PLANS-IN-HAND REVIEW
SEPTEMBER 2013

CONCUR	DATE
JOEL ST. AUBIN, P.E.	DIRECTOR OF DESIGN AND CONSTRUCTION
APPROVED	DATE
KENNETH M. MORTON, P.E.	REGIONAL PRECONSTRUCTION ENGINEER
APPROVED	DATE
WOLFGANG E. JUNGE, P.E.	AVIATION DESIGN SECTION CHIEF
APPROVED	DATE
LUKE BOWLAND, P.E.	PROJECT MANAGER

BY	DATE	REVISION

STATE OF ALASKA
DEPARTMENT OF TRANSPORTATION
AND PUBLIC FACILITIES
CENTRAL REGION

HOOPER BAY AIRPORT
HOOPER BAY, ALASKA
AIRPORT IMPROVEMENTS
PROJECT No. 57419
AIP No. 3-02-0XXX-00X-2014
TITLE SHEET
VICINITY MAP, LOCATION MAP

DATE: 9/4/2013
SHEET: 1 OF ##
AS-BUILT SHEET:

Date Revised:	9/04/2013, 10:32 AM
Layout Name:	COVER (1)
File Path and Name:	W:\Projects\Hooper Bay\Hooper Bay Airport Improvements 57419\Final Drawings\HPB 57419-Cover.dwg

Designed By:	PC
Drawn By:	RJB
Checked By:	AH

INDEX

SHEET TITLE	SHEET No.
TITLE, SIGNATURES, LOCATION MAP, & VICINITY MAP	1
INDEX	2
ESTIMATED QUANTITIES	3
PROJECT LAYOUT PLAN	4
TYPICAL SECTIONS	5
TYPICAL SECTIONS	6
RUNWAY PLAN & PROFILE	7
RUNWAY PLAN & PROFILE	8
TAXIWAY PLAN & PROFILE	9
ACCESS ROAD PLAN & PROFILE	10
ACCESS ROAD PLAN & PROFILE	11
ACCESS ROAD PLAN & PROFILE	12
DETAILS	13
DETAILS	14
SREB	15
ELECTRICAL	16
ATTACHMENTS	

APPENDIX DRAWINGS

SHEET TITLE	SHEET No.
SURVEY CONTROL	

STANDARD DRAWINGS

SHEET TITLE	SHEET No.
SIGN FRAMING AND POST SPACING	S-0.10
BRACING FOR SIGNS MOUNTED ON SINGLE POST	S-1.00
POST MOUNTED SIGN OFFSET AND HEIGHT	S-5.01
LIGHT SIGN POST EMBEDMENT	S-30.03
SIGN POST BASE AND FOUNDATION	S-31.00
CULVERT PIPE AND ARCH INSTALLATION DETAILS	D-01.02
PIPE AND ARCH TABLES	D-04.21
CULVERT END SECTIONS	D-06.10

LEGEND

DESCRIPTION	EXISTING	PROPOSED
AIRPORT PROPERTY BOUNDARY		
CULVERT W/ END SECTIONS		
DETAIL CALLOUT	DETAIL NUMBER X, SHEET LOCATION XX	
DITCH		
DITCH LINEAR GRADING		
EDGE OF PAVEMENT / SHOULDER		
FIELD INLET		
GEOTEXTILE STABILIZATION		
JUNCTION BOX		
PAVEMENT GROOVING		
RUNWAY / TAXIWAY CENTERLINE		
RUNWAY OBJECT FREE AREA		
RUNWAY SAFETY AREA		
SHOULDER EDGE		
SIGN		
SLOPE / FLOW ARROW		
STORM DRAIN CATCH BASIN	SDCB	
STORM DRAIN MANHOLE	SDMH	
STRUCTURAL EDGE		
SWALE-DITCH LINEAR GRADING		
TRANSITION EDGE		

ANCILLARY DRAWINGS

SHEET TITLE	SHEET No.
MATERIAL SITE AND HAUL ROUTE OVERVIEW	

ABBREVIATIONS

ATCT	AIR TRAFFIC CONTROL TOWER
AWOS	AUTOMATED WEATHER OBSERVING SYSTEM
BOP	BEGINNING OF PROJECT
BVCS	BEGIN VERTICAL CURVE STATION
BVCE	BEGIN VERTICAL CURVE ELEVATION
CASC	CRUSHED AGGREGATE SURFACE COURSE
℄	CENTERLINE
CS	CONTINGENT SUM
CY	CUBIC YARD
DIA	DIAMETER
DOT	DEPARTMENT OF TRANSPORTATION
ELEV	ELEVATION
EOP	END OF PROJECT
ESCP	EROSION AND SEDIMENT CONTROL PLAN
EVCS	END VERTICAL CURVE STATION
EVCE	END VERTICAL CURVE ELEVATION
GB	GRADE BREAK
HMA	HOT MIX ASPHALT
LF	LINEAR FOOT
LS	LUMP SUM
LT	LEFT
MIRL	MEDIUM INTENSITY RUNWAY LIGHTING
MITL	MEDIUM INTENSITY TAXIWAY LIGHTING
NTS	NOT TO SCALE
NIC	NOT IN CONTRACT
OFA	OBJECT FREE AREA
OG	ORIGINAL GROUND
PVI	POINT OF VERTICAL INTERSECTION
RAP	RECYCLED ASPHALT PAVEMENT
RD	ROAD
RSA	RUNWAY SAFETY AREA
RT	RIGHT
RW	RUNWAY
SF	SQUARE FEET
STA	STATION
TW	TAXIWAY
TYP	TYPICAL

REFERENCE DRAWINGS

SHEET TITLE	SHEET No.

STATE OF ALASKA 49TH Aaron C. Hughes CE-12981 REGISTERED PROFESSIONAL ENGINEER

BY	DATE	REVISION

STATE OF ALASKA
DEPARTMENT OF TRANSPORTATION AND PUBLIC FACILITIES
CENTRAL REGION

HOOPER BAY AIRPORT
HOOPER BAY, ALASKA
AIRPORT IMPROVEMENTS
PROJECT No. 57419
AIP No. 3-02-0XXX-00X-2014
INDEX

DATE: 9/4/2013
SHEET: 2 OF ##
AS-BUILT SHEET:

Date Revised: 9/04/2013, 10:32 AM
Layout Name: INDEX (2)
File Path and Name: W:\Projects\Hooper Bay\Hooper Bay Airport Improvements 57419\Final Drawings\HPB 57419-Cover.dwg
Designed By: PC
Drawn By: RJB
Checked By: AH

ESTIMATED QUANTITIES

No.	ITEM	UNIT	QUANTITY
D-701a	CMP, 36 inch	LF	40
D-760c	THAW WIRE INSTALLATION	LF	40
F-162a	8-FOOT CHAIN LINK FENCE	LF	4625
G-100a	MOBILIZATION AND DEMOBILIZATION (8%)	LS	ALL REQUIRED
G-115a	WORKERS MEALS AND LODGING, OR PER DIEM (4%)	LS	ALL REQUIRED
G-130a	FIELD OFFICE	LS	ALL REQUIRED
G-130b	FIELD LABORATORY	LS	ALL REQUIRED
G-130g	NUCLEAR TESTING EQUIPMENT STORAGE SHED	EA	1
G-130j	ENGINEERING COMMUNICATIONS	CS	ALL REQUIRED
G-131a	ENGINEERING TRANSPORTATION (TRUCK)	EA	1
G-131b	ENGINEERING TRANSPORTATION (ATV)	EA	1
G-135a	CONSTRUCTION SURVEYING BY THE CONTRACTOR	LS	ALL REQUIRED
G-135b	EXTRA THREE PERSON SURVEY PARTY	HR	300
G-150a	EQUIPMENT RENTAL, DOZER 70 HP(min)	HR	100
G-700a	AIRPORT FLAGGER	CS	ALL REQUIRED
G-710a	HIGHWAY TRAFFIC MAINTENANCE	LS	ALL REQUIRED
G-710b	HIGHWAY FLAGGER	CS	ALL REQUIRED
G-710d	HIGHWAY TRAFFIC CONTROL	CS	ALL REQUIRED
L-100b	REGULATOR, L-828	EA	1
L-100d	MEDIUM INTENSITY RUNWAY EDGE AND THRESHOLD LIGHT, L-861 AND L-861E	EA	46
L-100e	TAXIWAY EDGE LIGHT, L-861T	EA	22
L-100p	HANDHOLE, L-867, SIZE B	EA	5
L-101b	ROTATING BEACON, MEDIUM INTENSITY, L-801A	EA	1

No.	ITEM	UNIT	QUANTITY
L-107a	8-FOOT LIGHTED WIND CONE, IN PLACE	EA	1
L-107c	8-FOOT UNLIGHTED WIND CONE, IN PLACE	EA	1
L-108a	UNDERGROUND CABLE #8 AWG, COPPER, 5 KV FAA TYPE"C", L-824	LF	10,000
L-108c	#6 BARE COPPER GROUND CONDUCTOR	LF	10,000
L-108g	GROUND ROD	EA	10
L-109c	ELECTRICAL ENCLOSURE AND FOUNDATION IN PLACE	EA	1
L-109d	INSTALLATION OF EQUIPMENT IN ELECTRICAL ENCLOSURE AND FOUNDATION IN PLACE	EA	1
L-110g	2-INCH PE CONDUIT	LF	10,000
P-152a	UNCLASSIFIED EXCAVATION	CY	75,500
P-154a	SUBBASE	CY	138,200
P-157a	EROSION AND POLLUTION CONTROL ADMINISTRATION	LS	ALL REQUIRED
P-157b	TEMPORARY EROSION & SEDIMENT POLLUTION CONTROL	CS	ALL REQUIRED
P-157f	SWPPP PRICE ADJUSTMENT	CS	ALL REQUIRED
P-157g	SWPPP MANAGER	LS	ALL REQUIRED
P-160a	EXCAVATION OF PAVEMENT (AC)	SY	43,018
P-165a	REMOVAL OF STRUCTURES	LS	ALL REQUIRED
P-167b	DUST PALLIATIVE	LS	ALL REQUIRED
P-180a	RIPRAP	CY	12,500
P-185a(1)	PRIMARY ARMOR STONE	TON	2,050
P-208a	CRUSHED AGGREGATE SURFACE COURSE	CY	46,100
P-640b	SEGMENTED CIRCLE (PANEL-TYPE)	LS	ALL REQUIRED
P-650a	SOIL ANCHOR TIE-DOWN	EA	8
P-660b	REFLECTIVE MARKER, TYPE II	EA	20

No.	ITEM	UNIT	QUANTITY
P-660c	CONE, 18 INCH	EA	68
P-661a	STANDARD SIGN	SF	180
P-671a	RUNWAY CLOSURE MARKER, VINYL MESH PANEL	EA	2
P-680a	SILT FENCE	LF	18,325
P-681a	GEOTEXTILE, SEPARATION	SY	96,500
S-142p	EQUIPMENT STORAGE BUILDING	LS	ALL REQUIRED
S-143a	HEATING FUEL TANK (1000 GALLONS)	EA	1
S-143b	FUEL (2000 GALLONS)	LS	ALL REQUIRED
S-143c	MANUAL DISPENSING SYSTEM	EA	1
S-143e	MOTOR VEHICLE FUEL-DISPENSING TANK (1000 GALLONS)	EA	1
S-143f	SPILL PREVENTION CONTROL AND COUNTERMEASURE PLAN	LS	ALL REQUIRED
T-901b	SEEDING	LB	3,050
T-908n	HYDRAULIC EROSION CONTROL PRODUCT	SY	75,000

ESTIMATING FACTORS

No.	ITEM	FACTOR
P-154b	SUBBASE COURSE	1.99 T/CY

STATE OF ALASKA 49TH Aaron C. Hughes CE-12981 REGISTERED PROFESSIONAL ENGINEER

BY	DATE	REVISION

STATE OF ALASKA
DEPARTMENT OF TRANSPORTATION
AND PUBLIC FACILITIES
CENTRAL REGION

HOOPER BAY AIRPORT
HOOPER BAY, ALASKA
AIRPORT IMPROVEMENTS
PROJECT No. 57419
AIP No. 3-02-0XXX-00X-2014
TITLE SHEET
VICINITY MAP, LOCATION MAP

DATE: 9/4/2013
SHEET: 3 OF ##
AS-BUILT SHEET:

Designed By: PC
Drawn By: RJB
Checked By: AH
Date Revised: 9/04/2013, 10:32 AM
Layout Name: QUANTITIES (3)
File Path and Name: W:\Projects\Hooper Bay\Hooper Bay Airport Improvements 57419\Final Drawings\HPB 57419-Cover.dwg

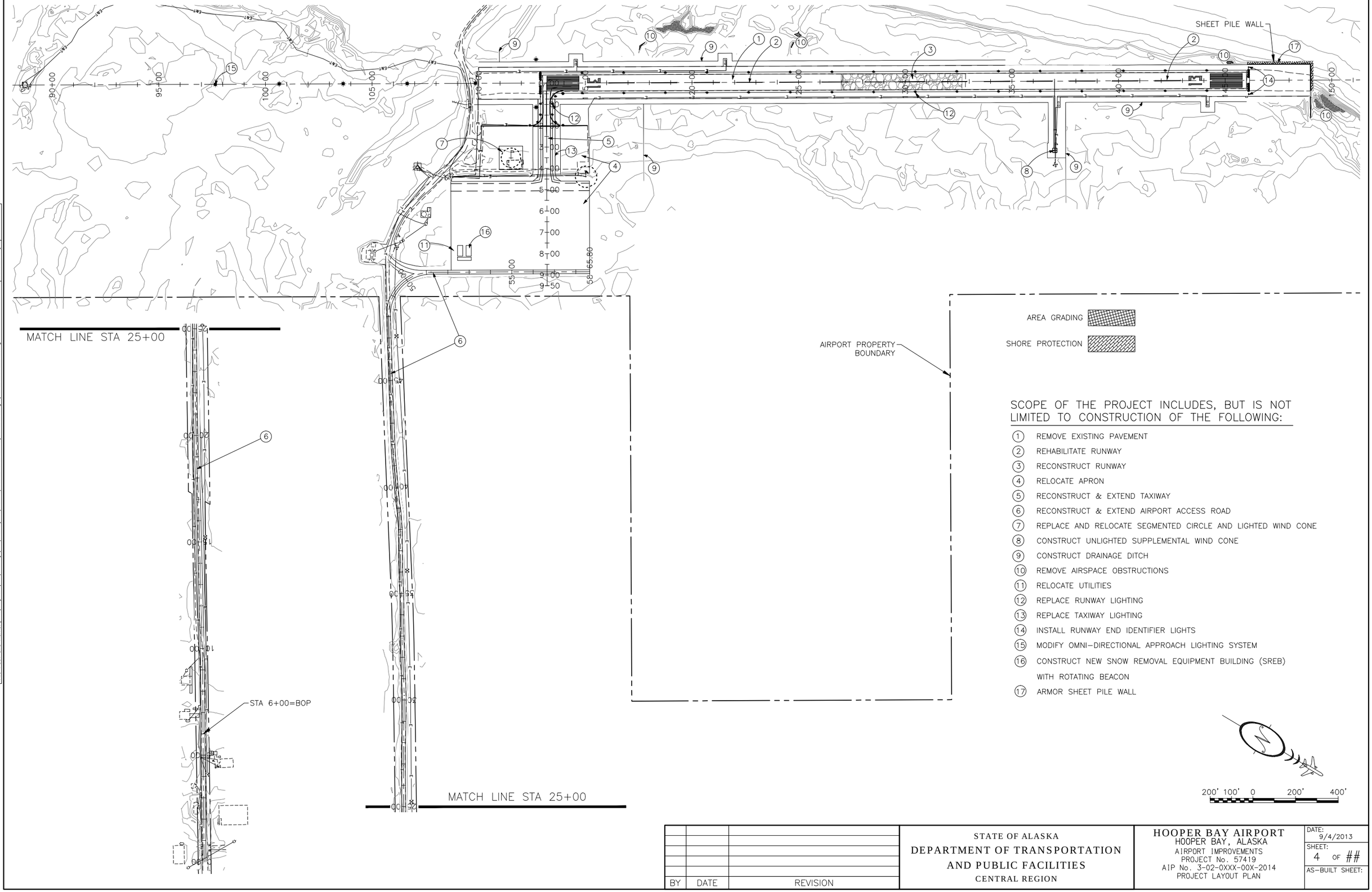

SCOPE OF THE PROJECT INCLUDES, BUT IS NOT LIMITED TO CONSTRUCTION OF THE FOLLOWING:

1. REMOVE EXISTING PAVEMENT
2. REHABILITATE RUNWAY
3. RECONSTRUCT RUNWAY
4. RELOCATE APRON
5. RECONSTRUCT & EXTEND TAXIWAY
6. RECONSTRUCT & EXTEND AIRPORT ACCESS ROAD
7. REPLACE AND RELOCATE SEGMENTED CIRCLE AND LIGHTED WIND CONE
8. CONSTRUCT UNLIGHTED SUPPLEMENTAL WIND CONE
9. CONSTRUCT DRAINAGE DITCH
10. REMOVE AIRSPACE OBSTRUCTIONS
11. RELOCATE UTILITIES
12. REPLACE RUNWAY LIGHTING
13. REPLACE TAXIWAY LIGHTING
14. INSTALL RUNWAY END IDENTIFIER LIGHTS
15. MODIFY OMNI-DIRECTIONAL APPROACH LIGHTING SYSTEM
16. CONSTRUCT NEW SNOW REMOVAL EQUIPMENT BUILDING (SREB) WITH ROTATING BEACON
17. ARMOR SHEET PILE WALL

Date Revised:	9/04/2013, 10:32 AM
Layout Name:	PLP
File Path and Name:	W:\Projects\Hooper Bay\Hooper Bay Airport Improvements 57419\Final Drawings\HPB 57419-PLP.dwg
Designed By:	PC
Drawn By:	RJB
Checked By:	AH

BY	DATE	REVISION

STATE OF ALASKA
DEPARTMENT OF TRANSPORTATION AND PUBLIC FACILITIES
CENTRAL REGION

HOOPER BAY AIRPORT
HOOPER BAY, ALASKA
AIRPORT IMPROVEMENTS
PROJECT No. 57419
AIP No. 3-02-0XXX-00X-2014
PROJECT LAYOUT PLAN

DATE: 9/4/2013
SHEET: 4 OF ##
AS-BUILT SHEET:

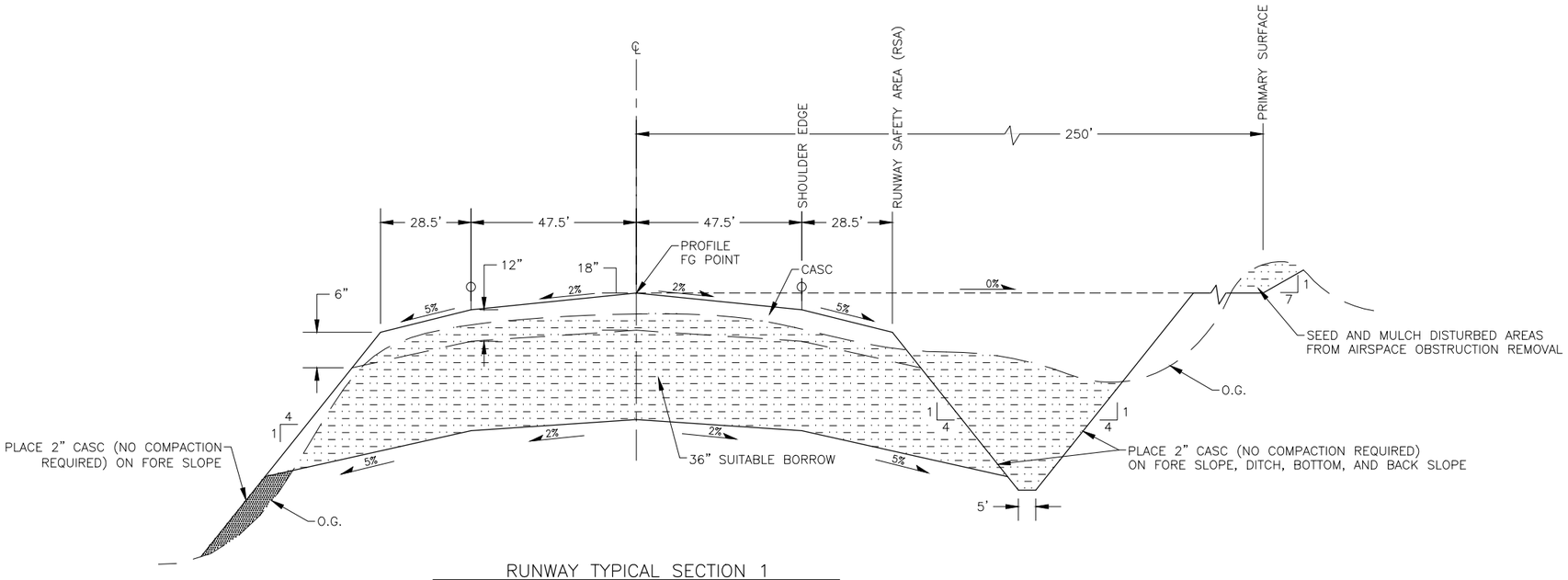

RUNWAY TYPICAL SECTION 1

NOT TO SCALE
STA 127+00 TO 133+00

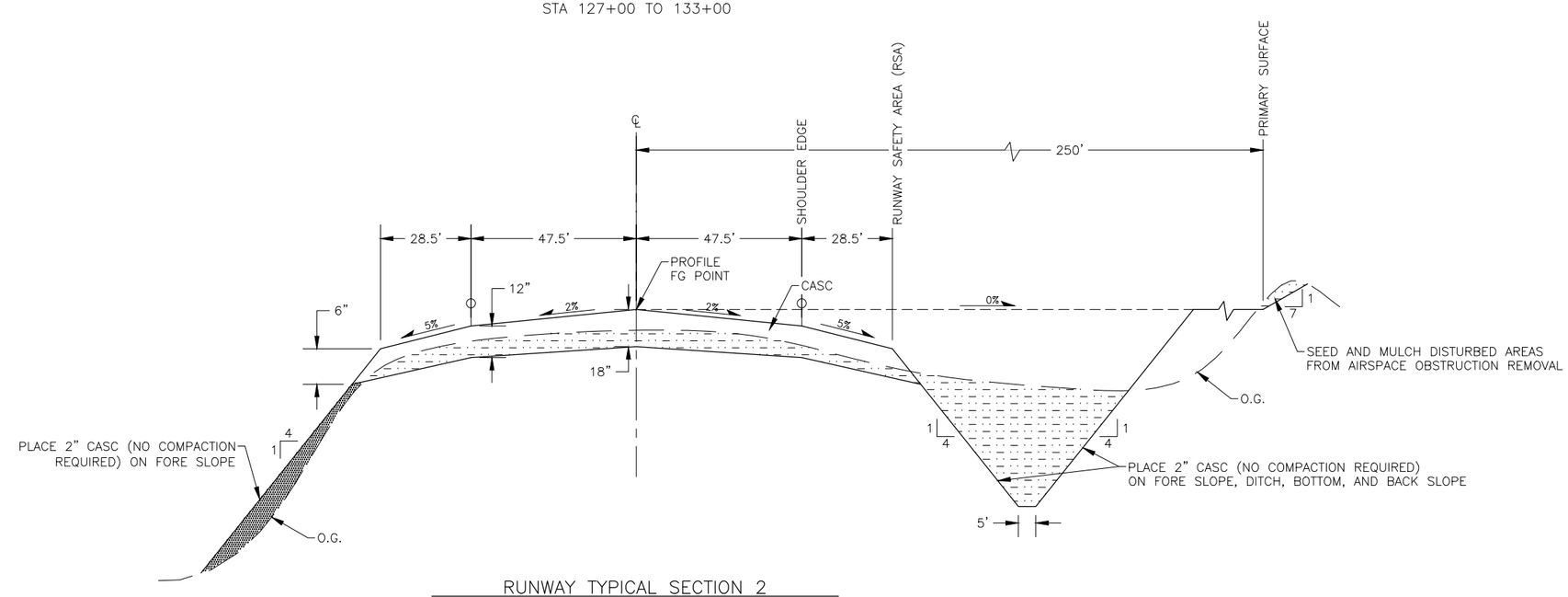

RUNWAY TYPICAL SECTION 2

NOT TO SCALE
STA 110+00 TO 127+00
STA 133+00 TO 149+00

LEGEND

- CUT
- FILL
- MUCK EXCAVATE
- RIP RAP

NOTES:

1. PLACE ORGANIC MUCK ON SLOPES.
2. SEED AND STABILIZE ALL SLOPES.

BY	DATE	REVISION

STATE OF ALASKA
DEPARTMENT OF TRANSPORTATION
AND PUBLIC FACILITIES
CENTRAL REGION

HOOPER BAY AIRPORT
HOOPER BAY, ALASKA
AIRPORT IMPROVEMENTS
PROJECT No. 57419
AIP No. 3-02-0XXX-00X-2014
TYPICAL SECTIONS

DATE: 8/28/2013
SHEET: 5 OF ##
AS-BUILT SHEET:

Date Revised: 9/04/2013, 10:32 AM
Layout Name: Typical Sections
File Path and Name: W:\Projects\Hooper Bay\Hooper Bay Airport Improvements 57419\Final Drawings\HPB 57419-DETAILS.dwg

Designed By: PC
Drawn By: RJB
Checked By: AH

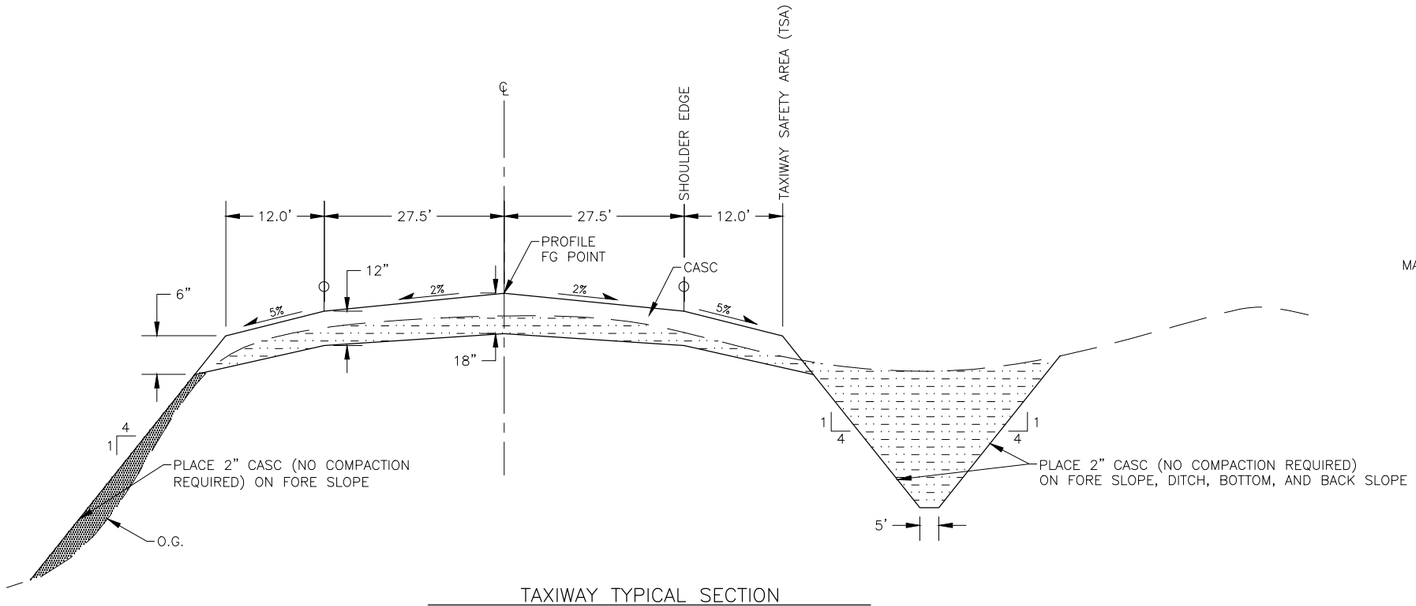

TAXIWAY TYPICAL SECTION

NOT TO SCALE

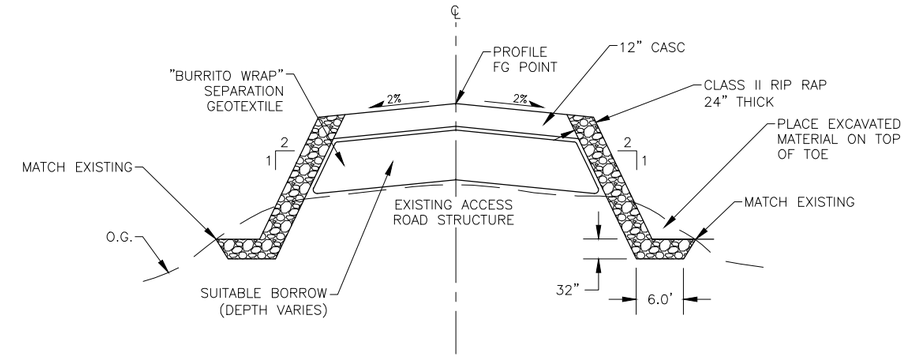

ACCESS ROAD RECONSTRUCTION

NOT TO SCALE

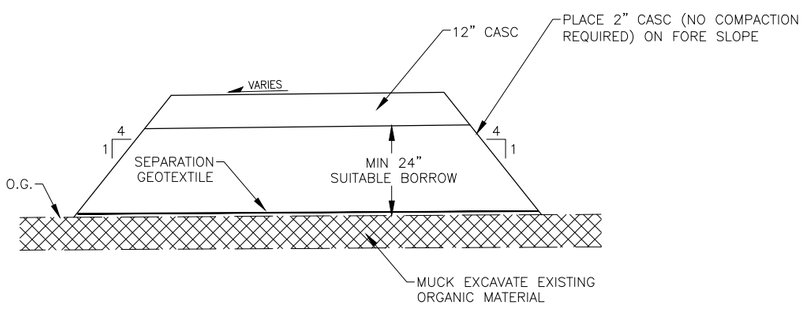

APRON SECTION

NOT TO SCALE

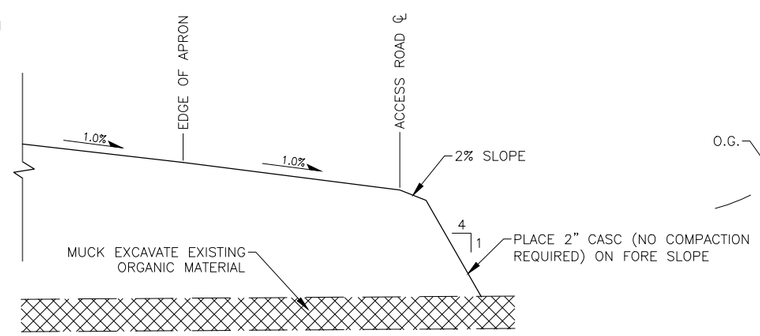

APRON SECTION AT ACCESS ROAD INTERFACE

NOT TO SCALE

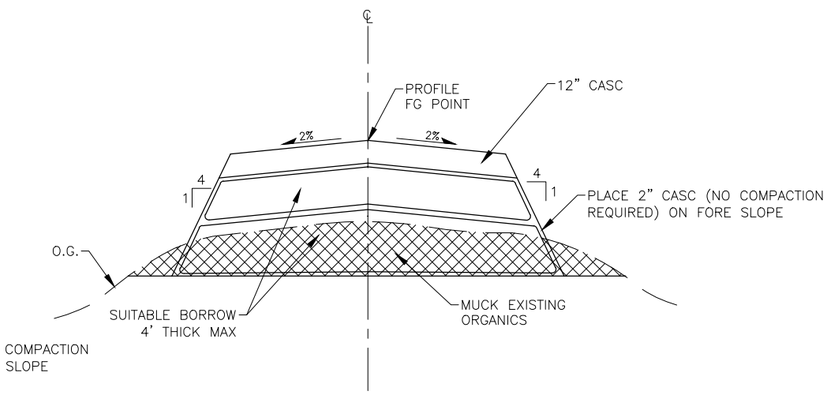

ACCESS ROAD EXTENSION

NOT TO SCALE

LEGEND

- CUT
- FILL
- MUCK EXCAVATE
- RIP RAP

NOTES:

1. PLACE ORGANIC MUCK ON SLOPES.
2. SEED AND STABILIZE ALL SLOPES.

BY	DATE	REVISION

STATE OF ALASKA
DEPARTMENT OF TRANSPORTATION
AND PUBLIC FACILITIES
CENTRAL REGION

HOOPER BAY AIRPORT
HOOPER BAY, ALASKA
AIRPORT IMPROVEMENTS
PROJECT No. 57419
AIP No. 3-02-0XXX-00X-2014
TYPICAL SECTIONS

DATE: 8/28/2013
SHEET: 6 OF ##
AS-BUILT SHEET:

Designed By:	PC
Drawn By:	RJB
Checked By:	AH
Date Revised:	9/04/2013, 10:32 AM
Layout Name:	Typical Sections (2)
File Path and Name:	W:\Projects\Hooper Bay\Hooper Bay Airport Improvements 57419\Final Drawings\HPB 57419-DETAILS.dwg

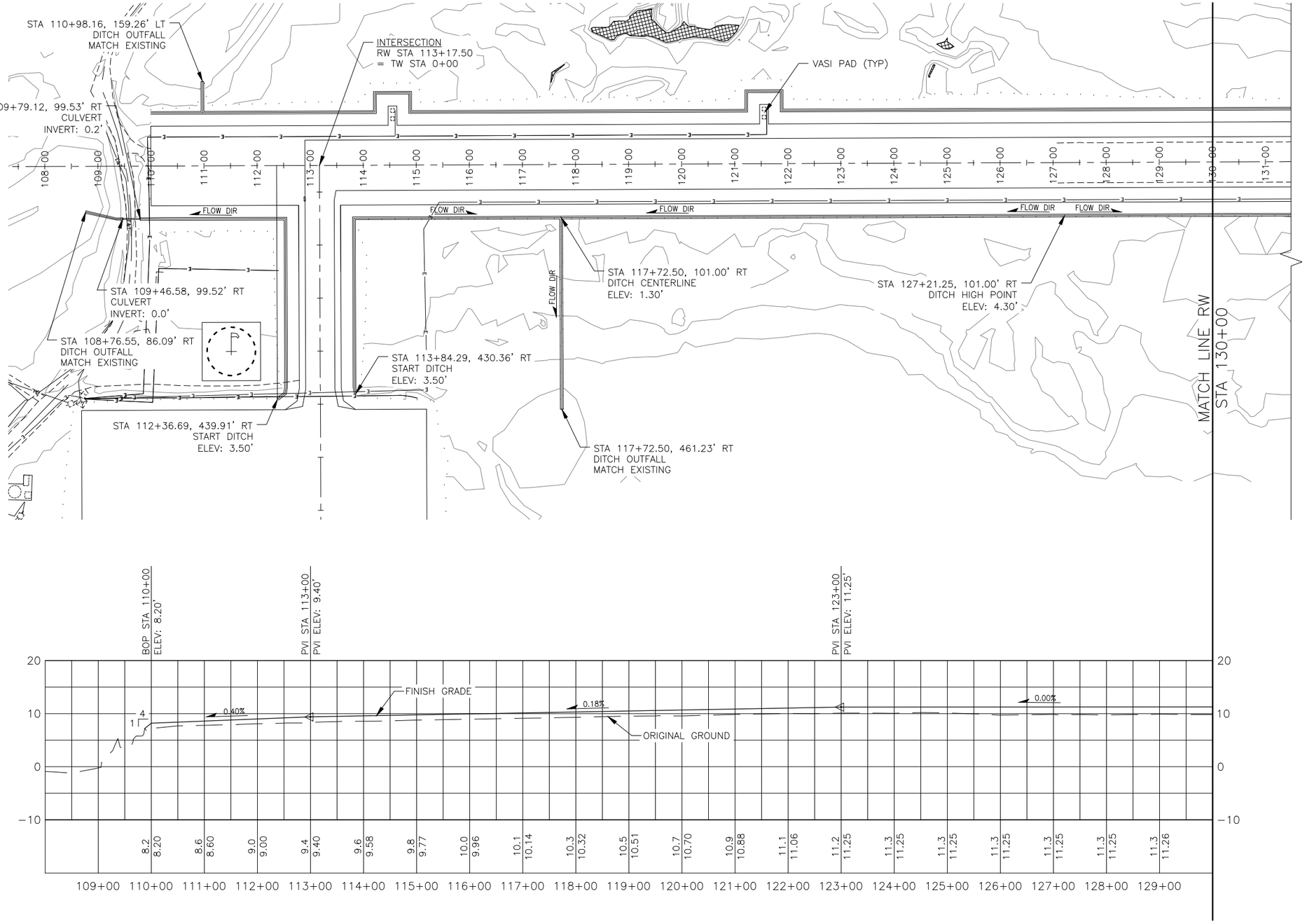

Date Revised:	9/04/2013, 10:32 AM
Layout Name:	RUNWAY P&P (SE END)
File Path and Name:	W:\Projects\Hooper Bay\Hooper Bay Airport Improvements 57419\Final Drawings\HPB 57419-DESIGN.dwg
Designed By:	PC
Drawn By:	RJB
Checked By:	AH

BY	DATE	REVISION

STATE OF ALASKA
DEPARTMENT OF TRANSPORTATION
AND PUBLIC FACILITIES
CENTRAL REGION

HOOPER BAY AIRPORT
HOOPER BAY, ALASKA
AIRPORT IMPROVEMENTS
PROJECT No. 57419
AIP No. 3-02-0XXX-00X-2014
RUNWAY 13-31
PLAN & PROFILE

DATE: 9/4/2013
SHEET: 7 OF ##
AS-BUILT SHEET:

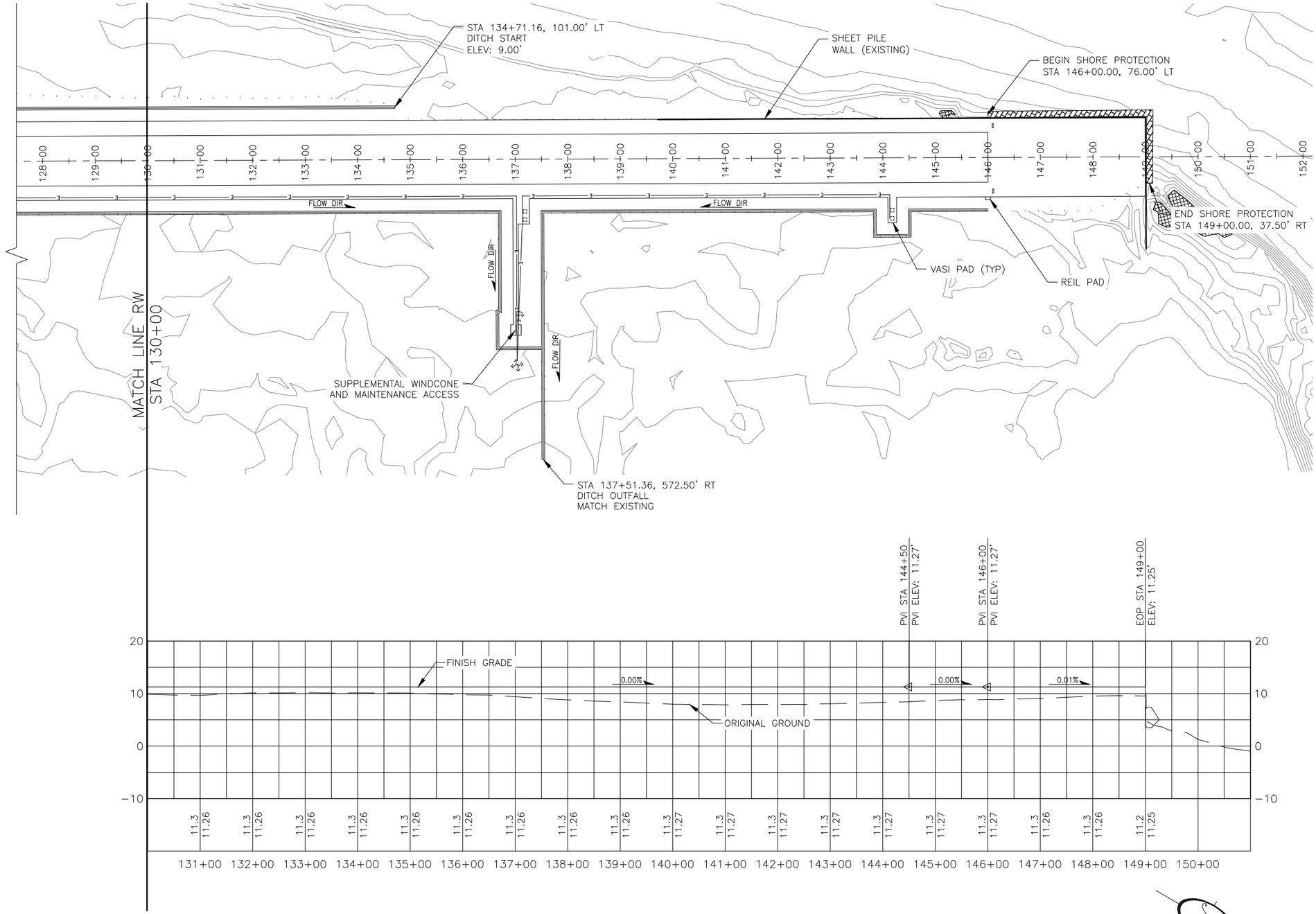

100' 50' 0 100' 200'

HORIZONTAL TO VERTICAL SCALE 1:10

Designed By:	PC
Drawn By:	RJB
Checked By:	AH

Date Revised:	9/04/2013, 10:32 AM
Layout Name:	RUNWAY P&P (NW END)
File Path and Name:	W:\Projects\Hooper Bay\Hooper Bay Airport Improvements 57419\Final Drawings\HPB 57419-DESIGN.dwg

BY	DATE	REVISION

STATE OF ALASKA
DEPARTMENT OF TRANSPORTATION
AND PUBLIC FACILITIES
CENTRAL REGION

HOOPER BAY AIRPORT
HOOPER BAY, ALASKA
AIRPORT IMPROVEMENTS
PROJECT No. 57419
AIP No. 3-02-0XXX-00X-2014
RUNWAY 13-31
PLAN & PROFILE

DATE: 9/4/2013
SHEET: 8 OF ##
AS-BUILT SHEET:

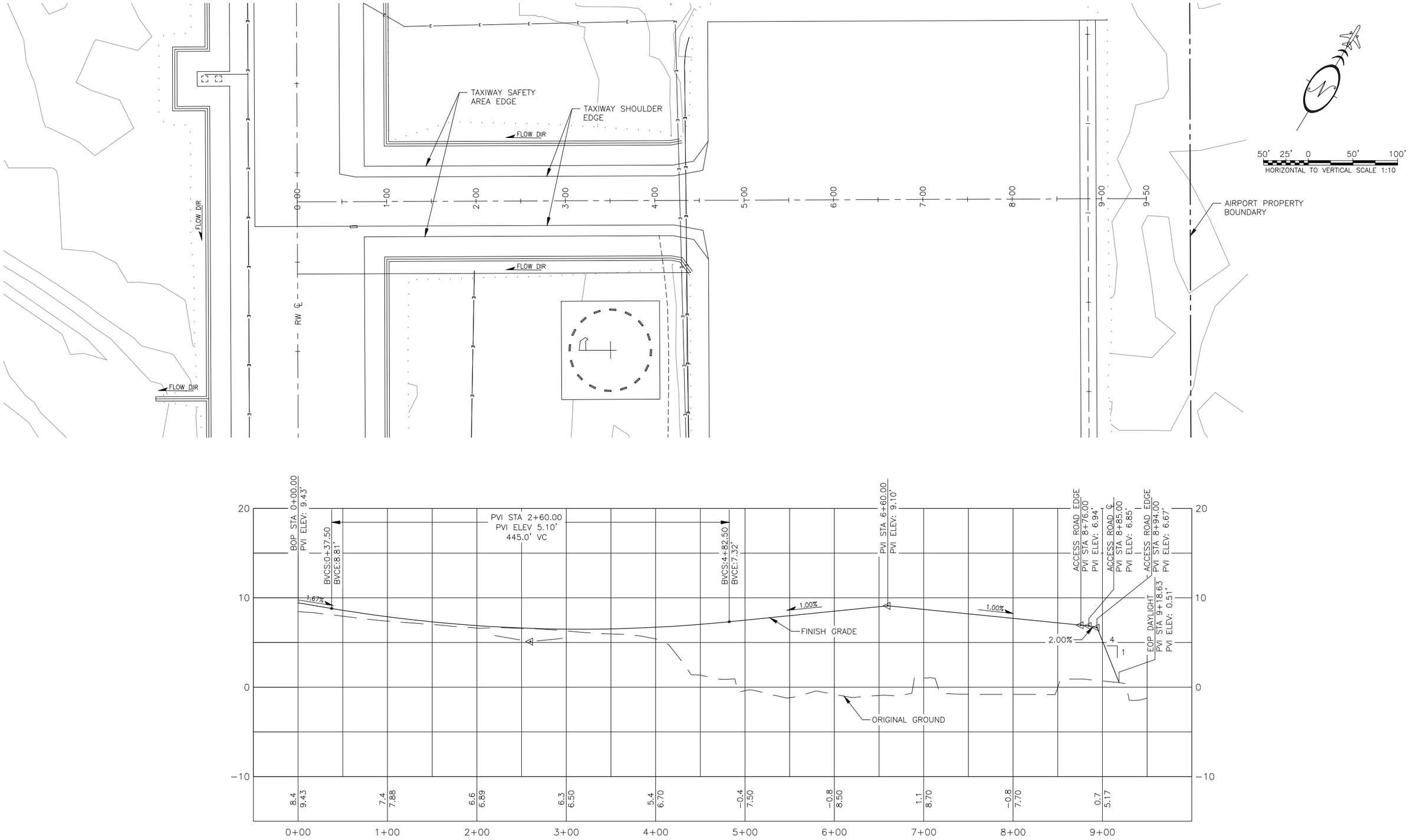

Designed By:	PC
Drawn By:	RJB
Checked By:	AH
Date Revised:	9/04/2013, 10:32 AM
Layout Name:	TAXIWAY P&P
File Path and Name:	W:\Projects\Hooper Bay\Hooper Bay Airport Improvements 57419\Final Drawings\HPB 57419-DESIGN.dwg

BY	DATE	REVISION

STATE OF ALASKA
DEPARTMENT OF TRANSPORTATION
AND PUBLIC FACILITIES
CENTRAL REGION

HOOPER BAY AIRPORT
HOOPER BAY, ALASKA
AIRPORT IMPROVEMENTS
PROJECT No. 57419
AIP No. 3-02-0XXX-00X-2014
TAXIWAY
PLAN & PROFILE

DATE: 9/4/2013
SHEET: 9 OF ##
AS-BUILT SHEET:

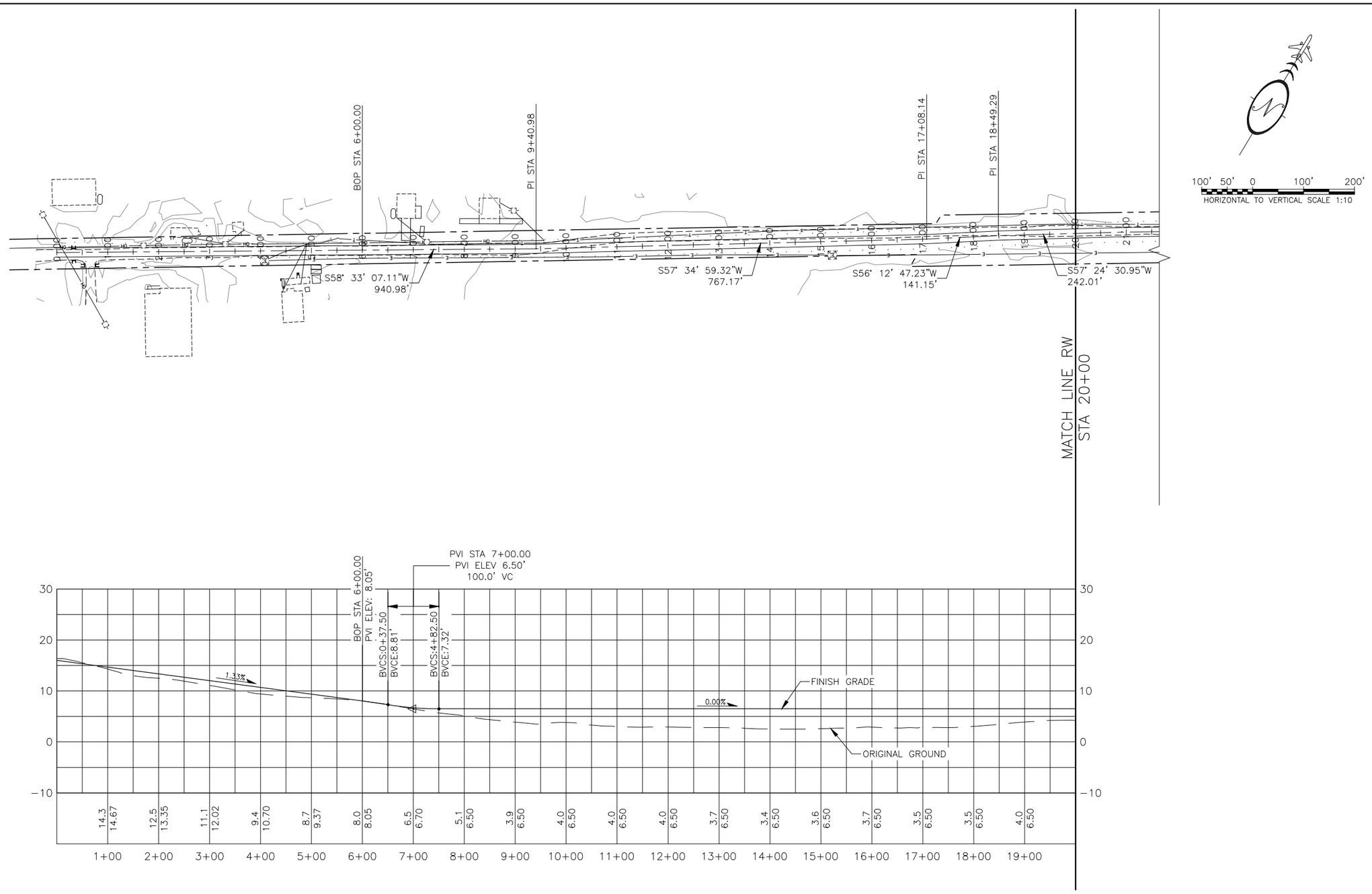

Designed By:	PC
Drawn By:	RJB
Checked By:	AH
Date Revised:	9/04/2013, 10:32 AM
Layout Name:	ACCESS_ROAD_P&P (1)
File Path and Name:	W:\Projects\Hooper Bay\Hooper Bay Airport Improvements 57419\Final Drawings\HPB 57419-DESIGN.dwg

BY	DATE	REVISION

STATE OF ALASKA
DEPARTMENT OF TRANSPORTATION
AND PUBLIC FACILITIES
CENTRAL REGION

HOOPER BAY AIRPORT
HOOPER BAY, ALASKA
AIRPORT IMPROVEMENTS
PROJECT No. 57419
AIP No. 3-02-0XXX-00X-2014
ACCESS ROAD
PLAN & PROFILE

DATE: 9/4/2013
SHEET: 10 OF ##
AS-BUILT SHEET:

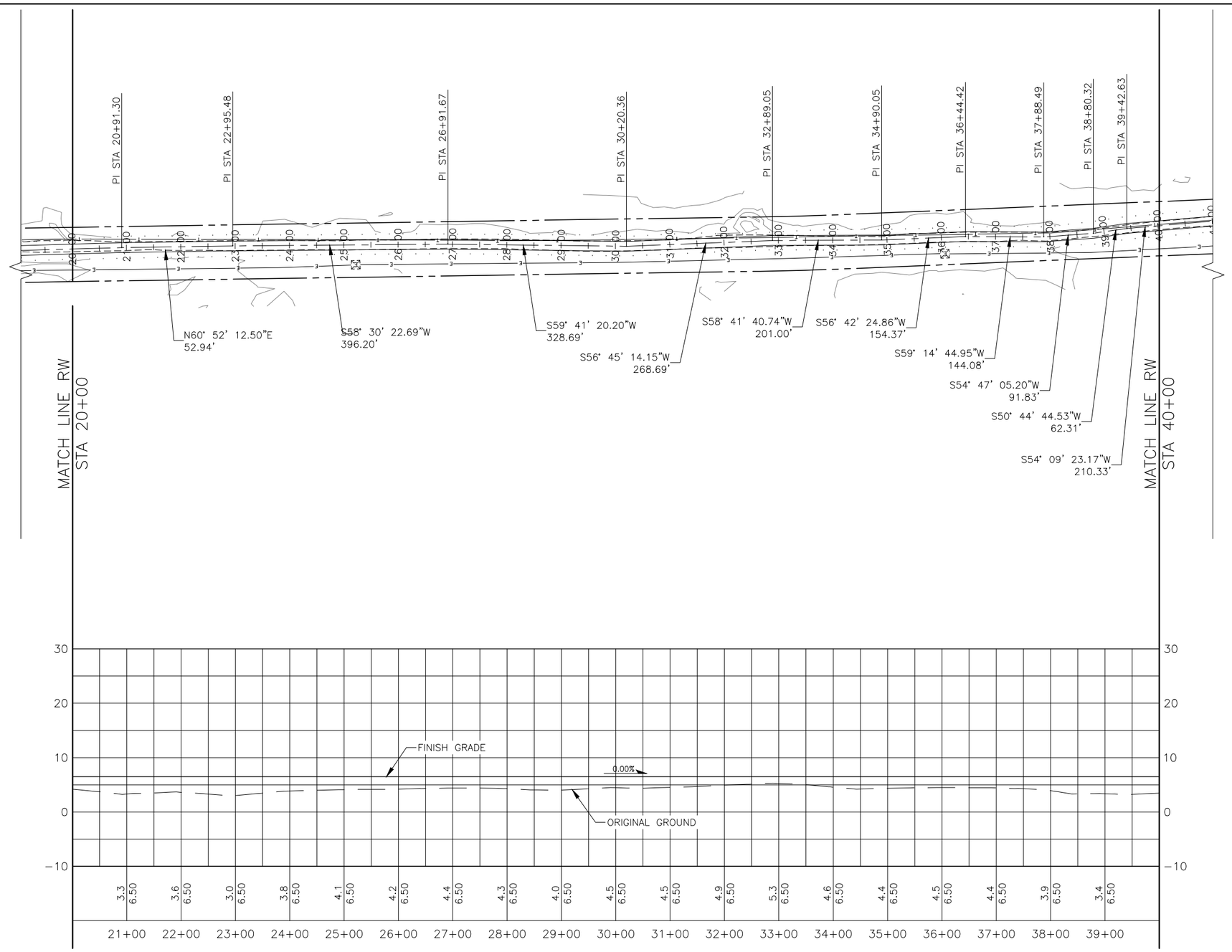

100' 50' 0 100' 200'
HORIZONTAL TO VERTICAL SCALE 1:10

Designed By:	PC
Drawn By:	RJB
Checked By:	AH
Date Revised:	9/04/2013, 10:32 AM
Layout Name:	ACCESS_ROAD_P&P (2)
File Path and Name:	W:\Projects\Hooper Bay\Hooper Bay Airport Improvements 57419\Final Drawings\HPB 57419-DESIGN.dwg

BY	DATE	REVISION

STATE OF ALASKA
DEPARTMENT OF TRANSPORTATION
AND PUBLIC FACILITIES
CENTRAL REGION

HOOPER BAY AIRPORT
HOOPER BAY, ALASKA
AIRPORT IMPROVEMENTS
PROJECT No. 57419
AIP No. 3-02-0XXX-00X-2014
ACCESS ROAD
PLAN & PROFILE

DATE: 9/4/2013
SHEET: 11 OF ##
AS-BUILT SHEET:

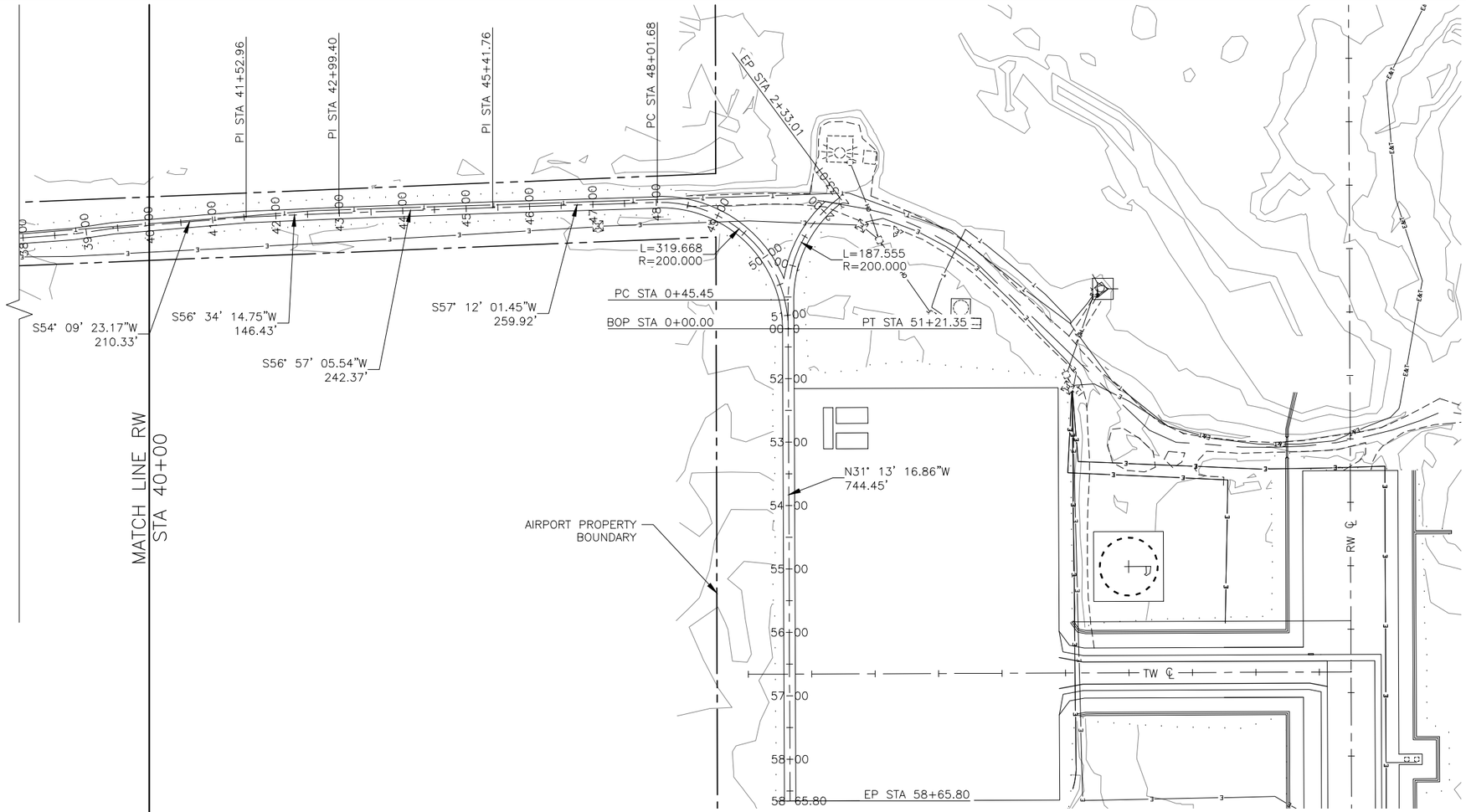

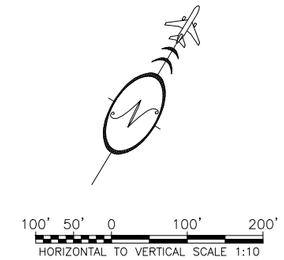

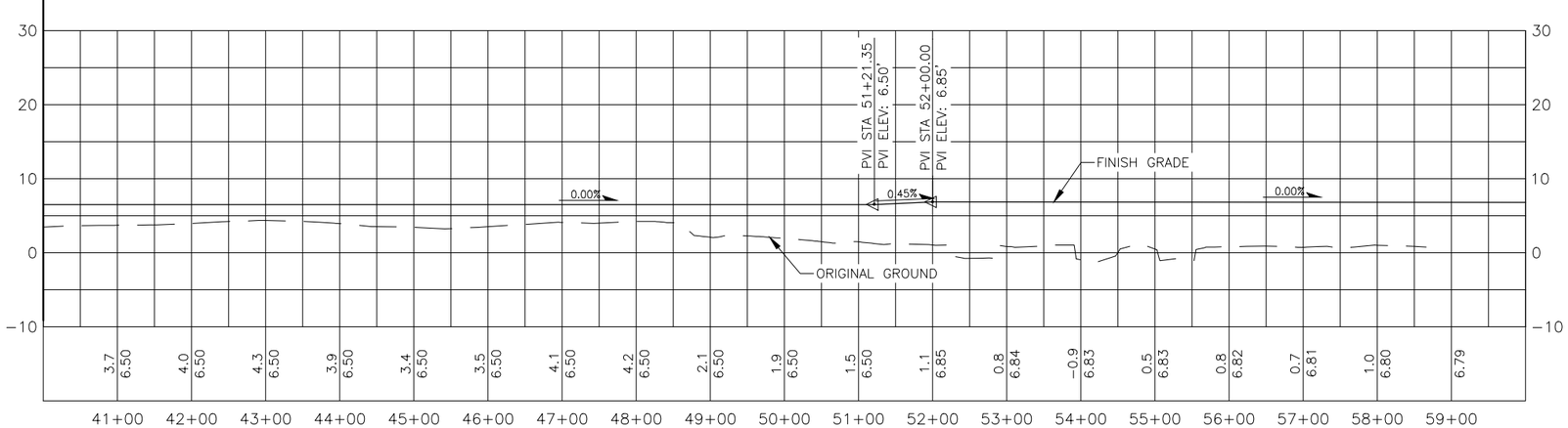

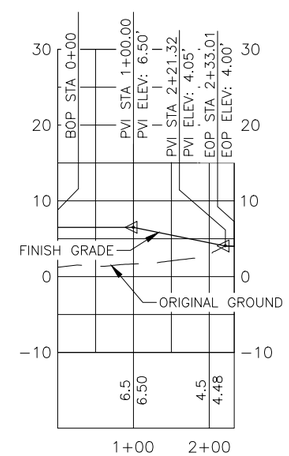

Date Revised:	9/04/2013, 10:32 AM	PC
Layout Name:	ACCESS_ROAD P&P (3)	RJB
File Path and Name:	W:\Projects\Hooper Bay\Hooper Bay Airport Improvements 57419\Final Drawings\HPB 57419-DESIGN.dwg	AH

Designed By: PC
Drawn By: RJB
Checked By: AH

BY	DATE	REVISION

STATE OF ALASKA
DEPARTMENT OF TRANSPORTATION
AND PUBLIC FACILITIES
CENTRAL REGION

HOOPER BAY AIRPORT
HOOPER BAY, ALASKA
AIRPORT IMPROVEMENTS
PROJECT No. 57419
AIP No. 3-02-0XXX-00X-2014
ACCESS ROAD
PLAN & PROFILE

DATE: 9/4/2013
SHEET: 12 OF ##
AS-BUILT SHEET:

PIECE	DESCRIPTION	QUANTITY
A	2-1/2" SQ GALV STEEL PERF TUBE, 60", NOTCHED	2
B	2-1/2" SQ GALV STEEL PERF TUBE, 76-1/2"	4
C	2-1/2" SQ GALV STEEL PERF TUBE, 19-1/2"	4
D	2" SQ GALV STEEL PERF TUBE, 96"	4
E	24" X 96" X 0.08" - 0.09" THICK ALUMINUM 6061-T6 OR 5052-H36/38	2
	3/8" X 3" GALV. BOLT, NUT	24
	3/8" X 5" GALV. BOLT, NUT	4
	3/8" X 6" GALV. BOLT, NUT	16
	3/8" GALV. REGULAR WASHER	48
	3/8" X 2" DIA. S.S. FENDER WASHER	40
	24" X 96" REFLECTIVE SHEETING	2

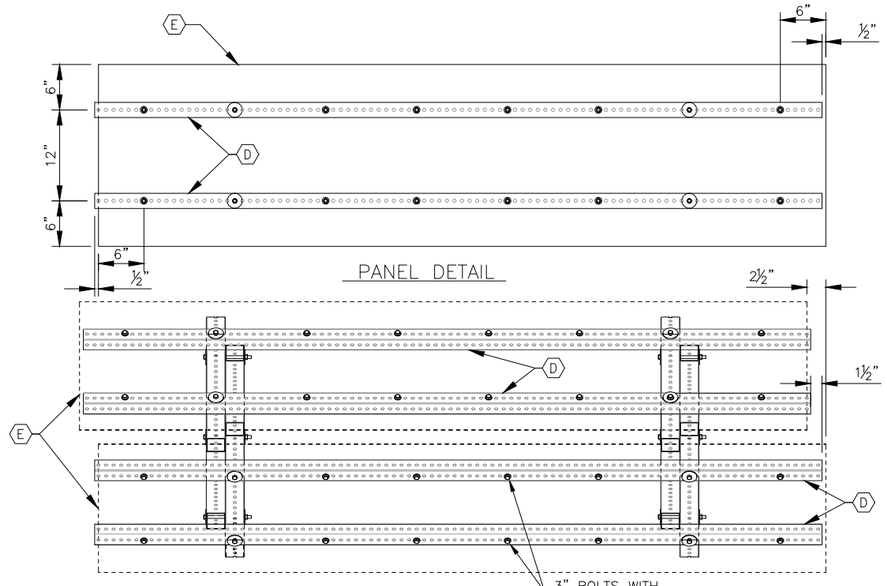

PANEL DETAIL

TOP VIEW

DESIGN NOTES:

Segmented Circle Panels:
Design Reference: FAA AC 150/5345-27D; AC 150/5340-5C; Alaska DOT item: P-640b

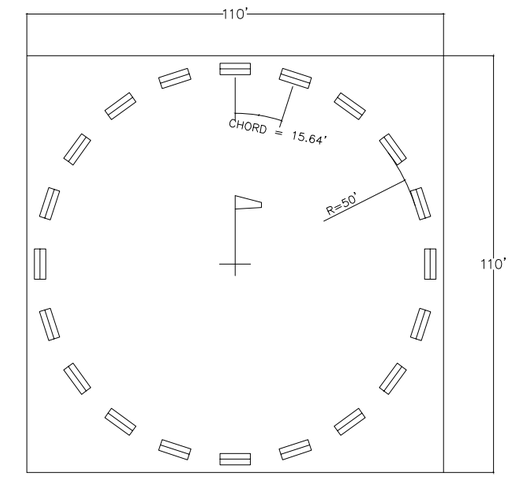

SEGMENTED CIRCLE LAYOUT

NO SCALE

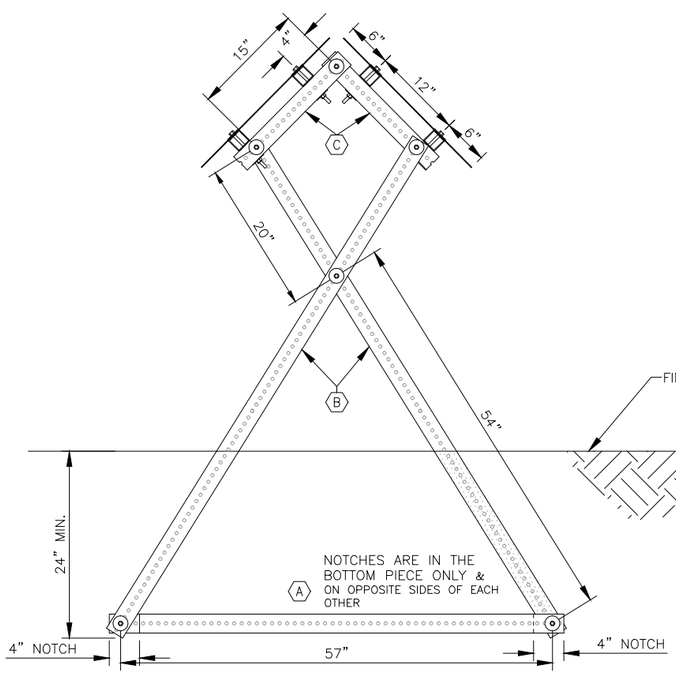

SIDE VIEW

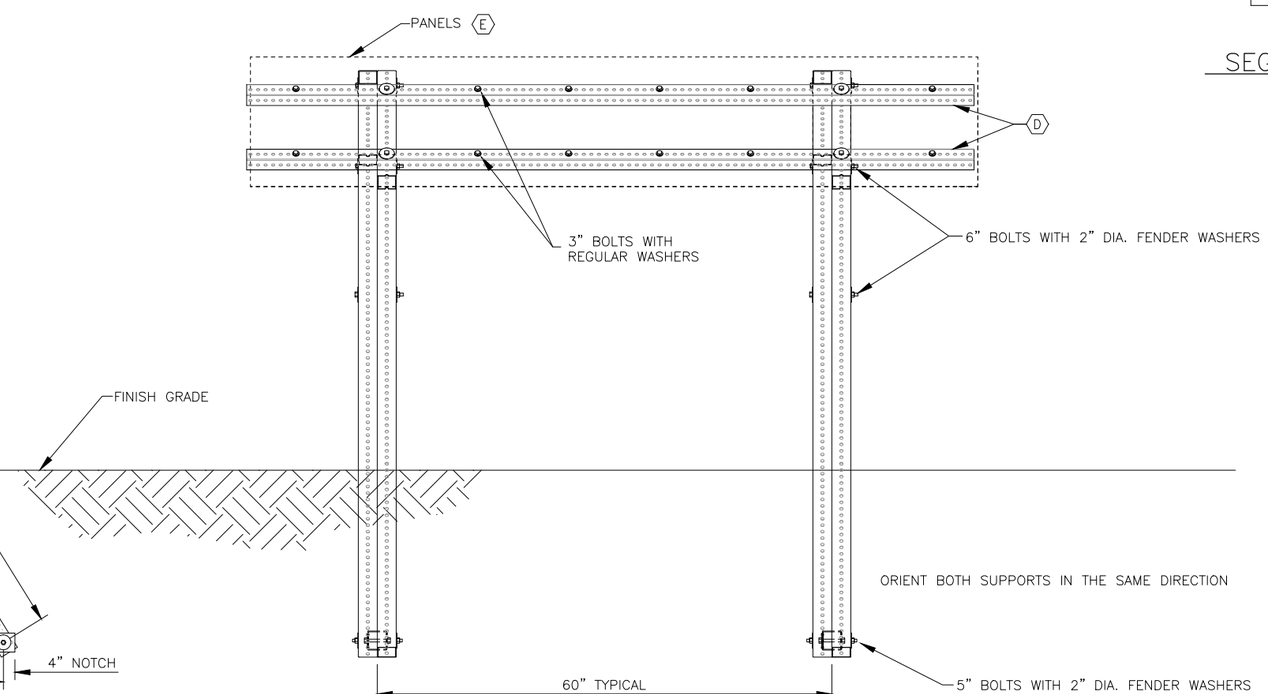

FRONT VIEW

SEGMENTED CIRCLE PANEL ASSEMBLY

NO SCALE

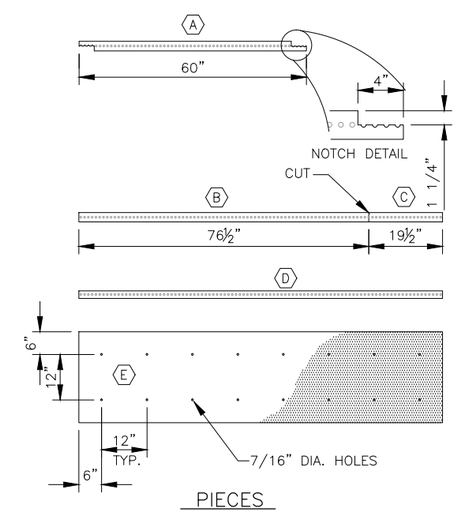

PIECES

NOTES:

1. CRITICAL ASSEMBLY DIMENSIONS ARE BETWEEN HOLES.
2. PAINT ALL CUT EDGES WITH COLD GALVANIZING.
3. APPLY REFLECTIVE FILM TO PANELS BEFORE ASSEMBLY.
4. LEVEL ASSEMBLY BEFORE BACKFILLING.
5. STEEL PERF TUBE SHALL BE 12-GAGE STEEL, GALVANIZED, WITH 7/16-INCH HOLES PUNCHED OR DRILLED ON ALL SIDES ON 1-INCH CENTERS.

BY	DATE	REVISION

STATE OF ALASKA
DEPARTMENT OF TRANSPORTATION
AND PUBLIC FACILITIES
CENTRAL REGION

HOOPER BAY AIRPORT
HOOPER BAY, ALASKA
AIRPORT IMPROVEMENTS
PROJECT No. 57419
AIP No. 3-02-0XXX-00X-2014
DETAILS

DATE: 8/28/2013
SHEET: 13 OF ##
AS-BUILT SHEET:

Designed By: PC
Drawn By: RJB
Checked By: AH
Date Revised: 9/04/2013, 10:32 AM
Layout Name: Segmented Circle
File Path and Name: W:\Projects\Hooper Bay\Hooper Bay Airport Improvements 57419\Final Drawings\HPB 57419-DETAILS.dwg

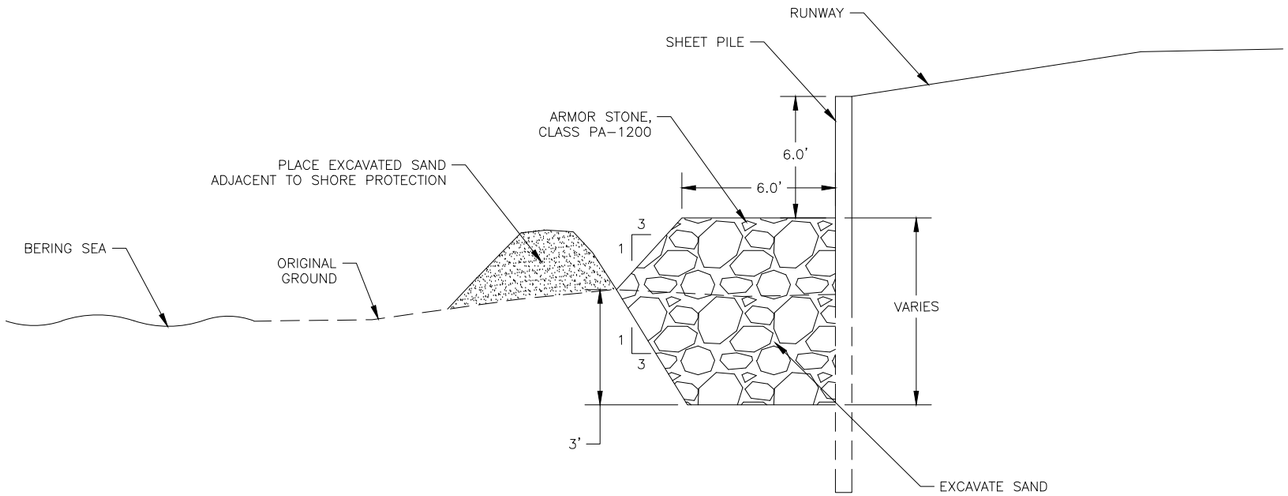

SHORE PROTECTION

NO SCALE

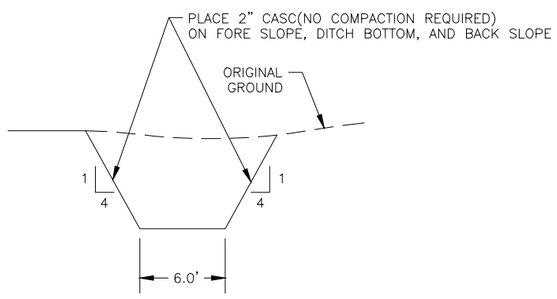

TYPICAL DITCH

NO SCALE

Date Revised:	9/04/2013, 10:32 AM
Layout Name:	Details
File Path and Name:	W:\Projects\Hooper Bay\Hooper Bay Airport Improvements 57419\Final Drawings\HPB 57419-DETAILS.dwg

Designed By:	PC
Drawn By:	RJB
Checked By:	AH

BY	DATE	REVISION

STATE OF ALASKA
DEPARTMENT OF TRANSPORTATION
AND PUBLIC FACILITIES
CENTRAL REGION

HOOPER BAY AIRPORT
HOOPER BAY, ALASKA
AIRPORT IMPROVEMENTS
PROJECT No. 57419
AIP No. 3-02-0XXX-00X-2014
DETAILS

DATE: 8/28/2013
SHEET: 14 OF ##
AS-BUILT SHEET:

Date Revised:	9/04/2013, 10:32 AM
Layout Name:	SREB
File Path and Name:	W:\Projects\Hooper Bay\Hooper Bay Airport Improvements 57419\Final Drawings\HPB 57419-SREB.dwg

Designed By:	PC
Drawn By:	RJB
Checked By:	AH

INCLUDED IN PRE - PS&E PREVIEW

BY	DATE	REVISION

STATE OF ALASKA
DEPARTMENT OF TRANSPORTATION
AND PUBLIC FACILITIES
CENTRAL REGION

HOOPER BAY AIRPORT
HOOPER BAY, ALASKA
AIRPORT IMPROVEMENTS
PROJECT No. 57419
AIP No. 3-02-0XXX-00X-2014
SREB
XX

DATE: 8/19/2013
SHEET: 15 OF ##
AS-BUILT SHEET:

Date Revised:	9/04/2013, 10:33 AM
Layout Name:	ELECTRICAL
File Path and Name:	W:\Projects\Hooper Bay\Hooper Bay Airport Improvements 57419\Final Drawings\HPB 57419-ELECTRICAL.dwg

Designed By:	PC
Drawn By:	RJB
Checked By:	AH

INCLUDED IN PRE - PS&E PREVIEW

BY	DATE	REVISION

STATE OF ALASKA
DEPARTMENT OF TRANSPORTATION
AND PUBLIC FACILITIES
CENTRAL REGION

HOOPER BAY AIRPORT
HOOPER BAY, ALASKA
AIRPORT IMPROVEMENTS
PROJECT No. 57419
AIP No. 3-02-0XXX-00X-2014
ELECTRICAL
XX

DATE: 8/19/2013
SHEET: 16 OF ##
AS-BUILT SHEET: